Welcome to the
Army Corps of Engineers EM-385-1-1
Safety and Health Requirements Manual

I have modified the following document. Some page number errors, not all, have been corrected. I removed all of the blank pages, AND the Index. (I consider this a fast electronic reference, not a print-from document, so I considered these to be redundant.) If you disagree on the Index I can send it to you.

Several hundred internal links have been added. The entire Table of Contents has been linked to the appropriate pages in the document. I have yellow highlighted the text to identify the location of imbedded links within the document. Where an actual jump-link was ridiculous I have drawn blue lines between the reference points. I suspect that I have missed a few places where an additional link should have been provided, and may even have misplaced one. Contact me and I will correct it for you.

One reminder – when using the links, look at the document page number near the bottom of your screen so that you can quickly return with a "Ctrl-N". I know of no way to get Acrobat® to automatically return you from whence you came.

I hope my enhancements prove useful to all.

David R. Colburn
DSN: 942-3082
Comm: (904) 542-3082
Current e-mail address: colburnda@nasjax.navy.mil
31 December 2003

DEPARTMENT OF THE ARMY EM 385-1-1
U.S. Army Corps of Engineers
CESO-ZA Washington, D.C. 20314-1000

Manual
No. 385-1-1 3 November 2003

Safety

SAFETY AND HEALTH REQUIREMENTS

1. Purpose. This manual prescribes the safety and health requirements for all Corps of Engineers activities and operations.

2. Applicability. This manual applies to Headquarters, US Army Corps of Engineers (HQUSACE) elements, major subordinate commands, districts, centers, laboratories, and field operating activities (FOA), as well as USACE and Naval Facilities (NAVFAC) Engineering Command contracts. Applicability extends to occupational exposure for missions under the command of the Chief of Engineers, whether accomplished by military, civilian, or contractor personnel.

3. References.

a. 29 Code of Federal Regulation (CFR) 1910

b. 29 CFR 1926

c. 29 CFR 1960

d. 30 CFR 56

e. Executive Order (EO) 12196

f. Federal Acquisition Regulation (FAR) Clause 52.236-13

This manual supersedes EM 385-1-1, 3 September 1996

For sale by the U.S. Government Printing Office
Superintendent of Documents, Mail Stop: SSOP, Washington, DC 20402-9328
ISBN 0-16-048877-x

g. Department of Defense Instruction (DODI) 6055.1

h. DODI 6055.3

i. Army Regulation (AR) 40-5

j. AR 385-10

k. AR 385-11

4. General.

a. The provisions of this manual implement and supplement the safety and health standards and requirements contained in 29 CFR 1910, 29 CFR 1926, 29 CFR 1960, 30 CFR 56, EO 12196, DODI 6055.1, DODI 6055.3, AR 40-5, AR 385-10, AR 385-11, AR 385-40, and FAR Clause 52.236-13. Where more stringent safety and occupational health standards are set forth in these requirements and regulations, the more stringent standards shall apply.

b. Mission applicability introduced in paragraph 2 above shall include the following:

(1) Construction contract work under the provisions of FAR Clause 52.236-13. Contractors shall comply with the latest version of EM 385-1-1 (including interim changes) that is in effect on the date of solicitation. Prior to making an offer, bidders should check the HQUSACE Safety and Occupational Health web site (see paragraph c) for the latest changes. No separate payment will be made for compliance with this paragraph or for compliance with other safety and health requirements of this contract. Note: Existing contracts will continue to apply the provisions of the previous edition(s) of this manual until contract completion.

(2) Service, supply, and research and development contracting actions. Compliance with this manual shall be a contract requirement for such activities when technical

representatives (proponent in coordination with safety and health professionals) advise that special precautions are appropriate.

(3) For contracting actions for hazardous, toxic, and radioactive waste site investigation, design, or remediation activities, compliance with this manual shall be a contract requirement.

c. Copies of this manual are available electronically on the USACE Safety and Occupational Health Office web site: http://www.hq.usace.army.mil/soh/hqusace_soh.htm and in Corps of Engineers Electronic Bid Sets. Hard copies and CD ROM versions of the manual are available from the local contracting officials.

(1) Changes. All interim changes (changes made between publication of new editions) to this manual will be posted on the Safety and Occupational Health Office web site. The date a change is posted will become the official effective date of the change.

(2) Interpretations. Within the Corps of Engineers, interpretations to the requirements contained within this manual shall be executed in accordance with the process contained in Appendix M. Interpretations will apply only to the specific situation in question and may not be used as a precedent to determine the meaning of a requirement as it may apply to another circumstance.

(3) Variances. Within the Corps of Engineers, variances to provisions of this manual require the approval of the Chief of Safety and Occupational Health, HQUSACE. Variances shall provide an equal or greater level of protection, shall be substantiated with a hazard analysis of the activity, and shall be documented and forwarded through channels to Chief of Safety and Occupational Health, HQUSACE. The process for requesting variances is contained in Appendix N.

(4) Exceptions. Some of the technical requirements of this manual may not always be applicable to overseas activities due to conflicting circumstances, practices, and laws or regulations of the locality or the unavailability of equipment. In such instances, means other than the ones specified in this manual may be used to achieve the required protection. When this occurs, a hazard analysis must be made to document that the required protection will be achieved by the alternate means.

d. Unless otherwise indicated, when publications are referenced in this manual, the most recent edition is to be used.

e. Underlining indicates new or changed text.

g. Supplementation of this manual is not authorized except as published by the Safety and Occupational Health Office, HQUSACE. Local USACE organizations may develop Standard Operating Procedures (SOPs) to implement the provisions contained within this manual, but may not implement new requirements without the specific approval of HQUSACE. Locally developed Safety and Health Requirements will not be included in contract requirements without the approval of HQUSACE. Unified Facilities Guide Specification (UFGS)–01525 will be used in all USACE and NAVFAC contract work under the provisions of FAR Clause 52.236-13.

FOR THE COMMANDER:

MICHAEL J. WALSH
Colonel, Corps of Engineers
Chief of Staff

TABLE OF CONTENTS

Section **Page**

1. Program Management 1
   - A. General 1
   - B. Indoctrination and Training 10
   - C. Physical Qualification of Employees 13
   - D. Accident Reporting and Recordkeeping 15
   - E. Emergency Planning 17
   - F. Emergency Recovery Operations 18

2. Sanitation 19
   - A. General Requirements 19
   - B. Drinking Water 19
   - C. Toilets 21
   - D. Washing Facilities 23
   - E. Food Service 24
   - F. Waste Disposal 25
   - G. Vermin Control 25

3. Medical and First-Aid Requirements 27
   - A. General 27
   - B. First-Aid Kits 30
   - C. First-Aid Stations and Infirmaries 32
   - D. Personnel Requirements and Qualifications 33

4. Temporary Facilities 35
   - A. General 35

5. Personal Protective and Safety Equipment 39
   - A. General 39
   - B. Eye and Face Protection 42
   - C. Hearing Protection and Noise Control 48
   - D. Head Protection 52
   - E. Respiratory Protection 54
   - F. Body Belts, Harnesses, Lanyards, and Lifelines - Selection of Components 75
   - G. Electrical Protective Equipment 77

H. Personal Floatation Devices 80
I. Lifesaving and Safety Skiffs..... 84

6. Hazardous Substances, Agents, and Environments..... 87
A. General 87
B. Hazardous Substances 89
C. Hot Substances..... 95
D. Harmful Plants, Animals, and Insects..... 97
E. Ionizing Radiation..... 98
F. Nonionizing Radiation and Magnetic and Electric Fields 108
G. Ventilation and Exhaust Systems 111
H. Abrasive Blasting 112
I. Confined Space 113
J. Inclement Weather and Environmental Hazards..... 126
K. Cumulative Trauma Prevention..... 129
L. Indoor Air Quality (IAQ) Management..... 131

7. Lighting 133
A. General 133

8. Accident Prevention Signs, Tags, Labels, Signals, Piping System Identification, and Traffic Control 137
A. Signs, Tags, Labels, and Piping Systems 137
B. Signal Systems, Personnel, and Procedures 145
C. Traffic Control 147
D. Haul Roads 147

9. Fire Prevention and Protection 163
A. General 163
B. Flammable and Combustible Liquids 168
C. Liquefied Petroleum Gas (LP-Gas) 174
D. Temporary Heating Devices..... 178
E. First Response Fire Protection..... 184
F. Fixed Fire Suppression Systems..... 189
G. Fire Fighting Equipment..... 190
H. Fire Detection and Employee Fire Alarm Systems..... 191
I. Fire Fighting Organizations - Training and Drilling..... 192

J. Fire Patrols 193
K. USACE Wild Land Fire Control 193

10. Welding and Cutting..... 197
A. General 197
B. Respiratory Protection..... 199
C. Fire Protection..... 200
D. Oxyfuel Gas Welding and Cutting 202
E. Arc Welding and Cutting..... 204
F. Gas Metal Arc Welding..... 206

11. Electrical 209
A. General 209
B. Overcurrent Protection, Disconnects, and Switches .. 214
C. Grounding 215
D. Temporary Wiring and Lighting 220
E. Operations Adjacent to Overhead Lines..... 222
F. Batteries and Battery Charging 225
G. Hazardous (Classified) Locations 226
H. Power Transmission and Distribution..... 229
I. Underground Electrical Installations 244
J. Work in Energized Substations..... 245
K. Communication Facilities 247

12. Control of Hazardous Energy (Lockout/Tagout)..... 249
A. General 249
B. Training 252
C. Periodic Inspections..... 253
D. Lockout and Tagout Devices..... 254
E. Applying and Removing Lockout and Tagout Devices..... 255

13. Hand and Power Tools 259
A. General 259
B. Grinding and Abrasive Machinery 261
C. Power Saws and Woodworking Machinery..... 263
D. Pneumatic Tools 265
E. Explosive-Actuated Tools..... 266

F. Chain Saws 268
G. Abrasive Blasting Machinery 268

14. Material Handling, Storage, and Disposal 271
A. Material Handling 271
B. Material Storage 272
C. Housekeeping 275
D. Material Disposal 276

15. Rigging 279
A. General 279
B. Wire Rope 280
C. Chain 284
D. Fiber Rope (Natural and Synthetic) 284
E. Slings 285
F. Rigging Hardware 287

16. Machinery and Mechanized Equipment 291
A. General 291
B. Guarding and Safety Devices 298
C. Cranes and Derricks - General 303
D. Crawler-, Truck-, Wheel-, and Ringer-Mounted Cranes 317
E. Portal, Tower, and Pillar Cranes 321
F. Floating Cranes, Floating Derricks, Crane Barges, and Auxiliary Shipboard Mounted Cranes 324
G. Overhead and Gantry Cranes 331
H. Monorails and Underhung Cranes 332
I. Derricks 332
J. Helicopter Cranes 334
K. Material Hoists 336
L. Pile Drivers 340
M. Drilling Equipment 342

17. Conveyors 347
A. General 347
B. Operation 353

18. Motor Vehicles and Aircraft 357
A. General 357
B. Operating Rules 362
C. Transportation of Personnel 365
D. All Terrain Vehicles (ATV) 366
E. Aircraft 367

19. Floating Plant and Marine Activities 369
A. General 369
B. Access 382
C. Launches, Motorboats, and Skiffs 385
D. Dredging 388
E. Scrows and Barges 390
F. Navigation Locks and Locking 391

20. Pressurized Equipment and Systems 393
A. General 393
B. Compressed Air and Gas Systems 397
C. Boilers and Systems 401
D. Compressed Gas Cylinders 402

21. Safe Access and Fall Protection 405
A. General 405
B. Standard Guardrails and Handrails 411
C. Personal Fall Protection Systems and Safety Nets 415
D. Ladders 421
E. Stairways 424
F. Ramps, Runways, and Trestles 427
G. Personnel Hoists and Elevators 427

22. Work Platforms 429
A. General 429
B. Scaffolds - General 430
C. Metal Scaffolds and Towers 433
D. Scaffolds - Wood Pole 437
E. Scaffolds - Suspended 443
F. Crane Supported Work Platforms 455
G. Form and Carpenter's Bracket Scaffolds 463
H. Horse Scaffolds 467

I. Pump Jack Scaffolds 468
J. Elevating Work Platforms..... 470
K. Vehicle-Mounted Elevating and Rotating Work Platforms 471
L. Mast Climbing Work Platform 473

23. Demolition..... 477
A. General 477
B. Debris Removal..... 480
C. Wall Removal..... 482
D. Floor Removal..... 483
E. Steel Removal..... 484
F. Mechanical Demolition 484

24. Floor and Wall Holes and Openings 487
A. General 487

25. Excavations 489
A. General 489
B. Safe Access 493
C. Sloping and Benching 495
D. Support Systems..... 496
E. Cofferdams..... 499

26. Underground Construction (Tunnels), Shafts, and Caissons 507
A. General 507
B. Hazardous Classifications 516
C. Air Monitoring, Air Quality Standards, and Ventilation..... 518
D. Fire Prevention and Protection..... 524
E. Drilling 528
F. Shafts 529
G. Hoisting..... 530
H. Caissons 531
I. Compressed Air Work..... 532
J. Underground Blasting 533

27. Concrete and Masonry Construction and Steel Erection 537
A. Concrete and Masonry Construction - General 537
B. Formwork and Shoring 539
C. Precast Concrete Operations 544
D. Lift-Slab Operations 545
E. Structural Steel Assembly 546
F. Systems-Engineered Metal Building 566
G. Masonry Construction 570
H. Roofing 571

28. Hazardous Waste Operations and Emergency Response (HAZWOPER) 579
A. General 579

29. Blasting 589
A. General 589
B. Transportation of Explosive Materials 594
C. Handling of Explosive Materials 597
D. Electromagnetic Radiation 598
E. Vibration and Damage Control 598
F. Drilling and Loading 600
G. Wiring 603
H. Firing 605
I. Post-Blast Procedures 607
J. Underwater Blasting 608

30. Contract Diving Operations 611
A. General 611
B. SCUBA Diving Operations 620
C. Surface Supplied Air Operations 622
D. Mixed-Gas Diving Operations 624
E. Equipment Requirements 625
F. Advanced Diving Technology 628
G. Scientific Snorkeling 629

31. Tree Maintenance and Removal 631
A. General 631
B. Tree Climbing 633
C. Felling 634

D. Brush Removal and Chipping 636
E. Other Operations and Equipment..... 637

32. Airfield Operations 641
A. General 641

Appendices

A – Minimum Basic Outline for Accident Prevention Plan.....A-1
B – Emergency Recovery Operations.....B-1
C – Guidelines for Control of Occupational Exposure to Crystalline Silica and Abrasive Blasting C-1
D – Assured Equipment Grounding Conductor Program D-1
E – Woodworking Machinery Guarding E-1
F – Rigging Inspection and Removal Criteria.....F-1
G – Procedures for the Examination and Qualification of Crane Operators G-1
H – Crane and Derrick Inspection Criteria H-1
I – Crane Testing Requirements for Performance Tests.....I-1
J – Ladders, Ramps, Stairs, and Fixed Ladders J-1
K – Cranes, Derricks, and Hooks.....K-1
L – Scaffolds, Work Stands, and Platforms L-1
M – USACE Process for Requesting Interpretations M-1
N – USACE Process for Requesting Waivers/Variances..... N-1
O – Manning Levels for Dive Teams..... O-1
P – Recommended Safe Practices for Tree Maintenance and Removal Operations P-1
Q – Definitions Q-1
R – Metric Conversion Table R-1
S – References and Resources S-1

Glossary .....Glossary -1

Index Index-1

Figures

1-1 – Position Hazard Analysis 4
1-2 – Activity Hazard Analysis 8
5-1 – Personal Floatation Devices 81
6-1 – PRCS Procedures and Decision Logic 115

8-1 – Sign and Tag Signal Word Headings 151
8-2 – Example Tag Layout 151
8-3 – Example Sign Layout 152
8-4 – Radio Frequency Warning Symbol 155
8-5 – Laser Caution Sign 156
8-6 – Laser Warning Sign 156
8-7 – Radiological Warning Symbol 157
8-8 – Slow-Moving Vehicle Emblem 157
8-9 – Accident Prevention Tags 158
8-10 – Crane Hand Signals 159
8-11 – Helicopter Hand Signals 161
15-1 – Wire Rope Clip Spacing (Not to be used for slings) 281
15-2 – Wire Rope Clip Orientation (Not to be used for slings) 281
15-3 – Wedge Socket Fastening 283
15-4 – Sling Configurations 286
25-1 – Sloping and Benching 500
25-2 – Trench Shields 504
25-3 – Trench Jacks 505
29-1 – Power Firing Systems 592
29-2 – Recommended Installation of Shooting Station and Accessory Arrangement for Using Arcontroller 592
J-1 – Suggested Design for Rungs on Individual-Rung Ladders J-2
J-2 – Rail Ladder with Bar Steel Rails and Round Steel Rungs J-5
J-3 – Clearance for Unavoidable Obstruction at Rear of Fixed Ladder J-5
J-4 – Ladder Far from Wall J-6
J-5 – Deflector Plates for Head Hazards J-6
J-6 – Relationship of Fixed Ladder to a Safe Access Hatch J-7
J-7 – Cages for Ladders More Than 20 ft (6.1 m) High J-7
J-8 – Clearance Diagram for Fixed Ladder in Well J-8
J-9 – Cages - Special Applications J-9
J-10 – Offset Fixed Ladder Sections J-9
J-11 – Slope of Ladders, Ramps, and Stairs J-13
J-12 – Slope of Wood Grain for Job Made Ladders J-13
J-13 – Example of Impermissible Knot Spacing J-14
J-14 – Example of Impermissible Knots at Edge J-14
J-15 – Example of Impermissible Spike Knots J-14

J-16 – Cleat Attachment, Single-Cleat Ladder J-15
J-17 – Cleat Attachment, Double-Cleat Ladder J-16
J-18 – Ladder Splices, 2 x 4 Rail J-17
J-19 – Ladder Splices, 2 x 6 Rail J-18
J-20 – Ladder Pitch J-19
J-21 – Methods for Securing Base J-20
K-1 – Mobile and Locomotive Cranes K-1
K-2 – Construction Tower Cranes K-8
K-3 – Overhead and Gantry Cranes K-11
K-4 – Cab-Operated Cranes K-14
K-5 – Floor-Operated Cranes K-15
K-6 – Floating Cranes K-16
K-7 – Derricks K-18
K-8 – Drop Section (Lift Section) K-22
K-9 – Hooks K-23
L-1 – Scaffolds L-1
L-2 – Work Stands L-38
L-3 – Platforms L-39

Tables

2-1 – Minimum Toilet Facilities (Construction Sites) 22
2-2 – Minimum Toilet Facilities (Other than Construction Sites) ... 23
3-1 – Minimum Quantity Requirements for Basic Unit Packages .. 31
5-1 – Eye and Face Protector Selection Guide 43
5-2 – Required Shades for Filter Lenses and Glasses in Welding, Cutting, Brazing, and Soldering 49
5-3 – Permissible Non-DOD Noise Exposures 50
5-4 – Standards for Electrical Protective Equipment 78
6-1 – Occupational Dose Rates 101
6-2 – Laser Safety Goggle Optical Density Requirements 109
6-3 – PRCS Program Elements 120
6-4 – PRCS Training 123
6-5 – Wind Chill Temperature Table 130
6-6 – Time to Occurrence of Frostbit in Minutes or Hours 130
7-1 – Minimum Lighting Requirements 135
8-1 – Accident Prevention Sign Requirements 153
8-2 – Accident Prevention Color Coding 154
8-3 – Identification of Piping Systems 154

9-1 – Maximum Allowable Size of Containers and Tanks for Flammable and Combustible Liquids 171
9-2 – LP-Gas Container and Cylinder Outside Storage Minimum Distances..... 177
9-3 – Temporary Heating Device Clearances 180
9-4 – Fire Extinguisher Distribution 185
11-1 – Minimum Clearance from Energized Overhead Electric Lines 223
11-2 – Hazardous (Classified) Locations 227
11-3 – Alternating Current – Minimum Distances 230
15-1 – Number of Clips and the Proper Torque Necessary to Assemble Wire Rope Eye Loop Connections with a Probable Efficiency Not More Than 80% 282
15-2 – Safe Working Loads for Shackles..... 288
16-1 – Crane Design and Construction Standards 309
19-1 – Fire Extinguisher Requirements for Launches/ Motorboats..... 386
21-1 – Selection Criteria for Planking and Platforms 407
21-2 – Maximum Intended Load 407
21-3 – Wood Plank Selection..... 408
21-4 – Safety Net Distances 419
22-1 – Wood Pole Scaffold Height and Level Limits 439
22-2 – Ladder-Type Platforms 450
22-3 – Form Scaffolds 464
22-4 – Minimum Dimensions for Horse Scaffold Members 467
27-1 – Erection Bridging for Short Span Joists 560
27-2 – Erection Bridging for Long Span Joists..... 562
29-1 – Energy Ratio and Peak Particle Velocity Formalae 599
C-1 – U.S. Guidelines and Limits for Occupational Exposure to Crystalline Cilica C-2
F-1 – Inspecting Wire Rope for Broken Wires.....F-1
F-2 – Allowable Chain Wear F-4
H-1 – Crane and Derrick Inspection Frequency..... H-2
I-1 – Crane Performance Testing Requirements - No-Load Tests I-2
I-2 – Crane Performance Testing Requirements - At-Load Tests I-6

O-1 – Dive Team Composition, SCUBA, Untethered, 0 to 100 ft (0 to 30.5 m)..... O-1
O-2 – Dive Team Composition, SCUBA, Tethered with Communications, 0 to 100 ft (0 to 30.5 m)..... O-2
O-3 – Dive Team Composition, Surface Supplied Air, 0 to 100 ft (0 to 30.5 m)..... O-2
O-4 – Dive Team Composition, Surface Supplied Air, 101 to 190 ft (31.8 to 57.9 m)..... O-3
O-5 – Dive Team Composition, Surface Supplied Mixed Gas Diving..... O-3

SECTION 1

PROGRAM MANAGEMENT

01.A GENERAL

01.A.01 No person shall be required or instructed to work in surroundings or under conditions that are unsafe or dangerous to his or her health.

01.A.02 The employer shall be responsible for initiating and maintaining a safety and health program that complies with the US Army Corps of Engineers (USACE) safety and health requirements.

01.A.03 Each employee is responsible for complying with applicable safety and occupational health requirements, wearing prescribed safety and health equipment, reporting unsafe conditions/activities, preventing avoidable accidents, and working in a safe manner.

01.A.04 Safety and health programs, documents, signs, and tags shall be communicated to employees in a language that they understand.

01.A.05 Worksites with non-English speaking workers shall have a person(s), fluent in the language(s) spoken and English, on site when work is being performed, to translate as needed.

01.A.06. The Contractor shall erect and maintain a safety and health bulletin board in an area commonly accessed by workers. The bulletin board shall be maintained current, in clear view of on-site workers; and protected against the elements and unauthorized removal. It shall contain at least the following safety and health information:

a. Map denoting the route to the nearest emergency care facility.

b. Emergency phone numbers.

c. Copy of the most up-to-date accident prevention plan (APP) shall be mounted on or adjacent to the bulletin board or state the location, which will be accessible on the site by all workers.

d. Copy of current activity hazard analysis/analyses (AHA) shall be mounted on or adjacent to the bulletin board or state the location, which will be accessible on the site by all workers.

e. Occupational Safety and Health Administration (OSHA) Form 300A shall be posted in accordance with OSHA requirements and mounted on or adjacent to the bulletin board or state the location, which will be accessible on the site by all workers.

f. Copy of Safety and Occupational Health deficiency tracking log shall be mounted on or adjacent to the bulletin board or state the location where it will be accessible by all workers upon request. (See content in 01.A.12.d.)

g. Safety and Health promotional posters.

h. Date of last lost workday injury.

i. OSHA Safety and Health Poster.

01.A.07 USACE Project Managers (PMs) shall ensure that a safety and occupational health plan is developed, in accordance with the Safety and Occupational Health Reference Document contained in the USACE Business Manual, and incorporated into each Project Management Plan (PMP)/Program Management Plan (PrgMP).

01.A.08 USACE Project Delivery Teams (PDTs) will develop the safety and occupational health plan to be incorporated in the PMP

and are responsible for assuring that safety and occupational health requirements are properly addressed and executed throughout the life cycle of each project.

01.A.09 For USACE activities where USACE employees are engaged in other than routine office/administrative functions, a project specific safety and health plan (SSHP) shall be developed, implemented, and updated as necessary. ***> See Section 28.***

a. Such activities include operations and maintenance; recreational resource management; in-house conducted environmental restoration (investigation, design, and remediation); surveying, inspection, and testing; construction management; warehousing; transportation; research and development; and other activities when the Government Designated Authority (GDA) and the command safety and occupational health office agree on the benefit of such a program in accident prevention.

b. The project safety and health plan shall address applicable items listed in Appendix A in addition to the USACE Command's safety and occupational health program requirements.

01.A.10 A position hazard analysis (PHA) shall be prepared, updated as necessary, and documented by the supervisor of each USACE position as warranted by the hazards associated with the position's tasks. A generic PHA may be used for groups of employees performing repetitive office/administrative tasks where the primary hazards are ergonomic, lighting, light lifting and carrying, and indoor air quality. ***> See Figure 1-1 for an outline of a PHA.***

a. The GDA, using the advice of the safety and occupational health office, shall determine the need for analysis for each position within his or her area of responsibility.

b. In developing the analysis for a particular position, supervisors should draw upon the knowledge and experience of employees in that position and the safety and occupational

health office.

c. Supervisors will review the contents of PHAs with employees upon initial assignment to a position, and at least annually or whenever there is a significant change in hazards.

01.A.11 Before initiation of work at the job site, an APP with appropriate appendices (e.g., SSHP for hazardous waste site cleanup operations, Lead Compliance Plan when working with lead, Asbestos Hazard Abatement Plan when working with asbestos) -- written in English by the Prime Contractor for the specific work and hazards of the contract and implementing in detail the pertinent requirements of this manual -- will be reviewed and found acceptable by the GDA. APPs shall be developed and submitted by the Contractor in the formats provided in Appendix A of this manual. The Contractor shall address each of the elements/sub-elements in the outline contained in Appendix A in the order that they are provided in the manual. If by the nature of the work an item is not applicable, the Contractor will so state and provide a justification for why that element/sub-element is not applicable.
>*See Appendix A.*

a. The plan will be developed by qualified personnel and will be signed in accordance with Appendix A.1. The Contractor shall be responsible for documenting the qualified person's credentials.

b. On contract operations, the Contractor's plan will be job-specific and will include work to be performed by subcontractors and measures to be taken by the Contractor to control hazards associated with materials, services, or equipment provided by suppliers.

FIGURE 1-1

POSITION HAZARD ANALYSIS

POSITION HAZARD ANALYSIS (PHA) FOR USACE EMPLOYEE

NAME: (Print - Last, First, MI): _____

JOB SERIES: _____

JOB TITLE: _____

JOB NUMBER (SF-52): _____

Prepared by: (Print Name – Last, First, MI): _____

Analyzed by (SSHO): _____

Date (mo) _ _ (day) _ _ (year) _ _ _ _

COMMAND NAME & ORGANIZATION CODE: _____

PRIMARY DUTY LOCATION: _____

Clearances Required

EM OPS Team	First Aid/CPR	Respirator	CDL	Crane Operator	Diver	HTRW	Other
☐	☐	☐	☐	☐	☐	☐	☐

POSITION TASKS	SAFETY AND/OR OCCUPATIONAL HEALTH HAZARDS	RECOMMENDED CONTROLS
1.	1.	1.
2.	2.	2.
3.	3.	3.
4.	4.	4.
5.	5.	5.
6.	6.	6.
7.	7.	7.

*Note: Examples of potential hazards are as follows:

Safety:	Physical Agent:	Chemical:	Biological:
trenching, electrical, slips, trips, fall hazards, etc.	Exposure to heat/cold, noise, stress, vibration, radiation, etc.	Exposure to solvents, cadmium, paints, welding fumes, pesticides, etc.	Exposure to bloodborne pathogens, poison ivy, insects, fungi, etc.

FIGURE 1-1 (CONTINUED)

POSITION HAZARD ANALYSIS

EQUIPMENT TO BE USED	INSPECTION REQUIREMENTS	TRAINING REQUIREMENTS
List equipment to be used for each task	List inspection requirements for each work task	List safety/health training requirements
1.	1.	1.
2.	2.	2.
3.	3.	3.
4.	4.	4.
5.	5.	5.
6.	6.	6.
7.	7.	7.
8.	8.	8.
9.	9.	9.
10.	10.	10.

This analysis serves as the hazard assessment required by Sections 01, 05, and 06 of EM 385-1-1, U.S. Army Corps of Engineers Safety and Health Requirements Manual. The employee covered by this analysis has been instructed in the tasks to be performed, the hazards to be encountered, the potential adverse effects of exposure to such hazards and the controls to be used. He/she has received adequate training specifically related to safe work practices, administrative and engineering controls and personal protective equipment (PPE) to be used in order to assure assigned work tasks are conducted in a safe and healthful manner. He/she has demonstrated an understanding of the safety and health equipment and PPE to be used to include its limitations, useful self-life, how to properly don, doff, adjust, and wear required PPE and how to properly care for, inspect, maintain, store, and dispose. Attached is documentation of the training received, dates of such training, and the subject matter taught.

Supervisor Signature_____ Employee Signature_____

Date __ __/__ __/__ __ __ __ Date __ __/__ __/__ __ __ __

01.A.12 Inspections.

a. The APP or the USACE Project Safety and Health Plan shall provide for frequent safety inspections, conducted by competent persons, of the work sites, material, and equipment to ensure compliance with the plan and this manual.

b. In addition to the requirements of subparagraph a., Contractor quality control (QC) personnel - as part of their QC responsibilities - shall conduct and document daily safety and occupational health inspections in their daily QC logs.

c. Identified safety and health issues and deficiencies, and the actions, timetable, and responsibility for correcting the deficiencies, shall be recorded in inspection reports. Follow-up inspections to ensure correction of any identified deficiencies shall be conducted and documented in a like manner.

d. The Contractor shall establish a safety and occupational health deficiency tracking system that lists and monitors the status of safety and health deficiencies in chronological order. The list will be posted on the project safety bulletin board, will be updated daily, and will provide the following information:

(1) Date deficiency identified.

(2) Description of deficiency

(3) Name of person responsible for correcting deficiency.

(4) Projected resolution date

(5) Date actually resolved.

e. The Contractor will immediately notify the GDA of any OSHA or other regulatory agency inspection and provide him/her an opportunity to accompany the Contractor on the inspection. (The inspection will not be delayed due to non-availability of the GDA.) The Contractor shall provide the GDA a copy of any citations or reports issued by the inspector and any corrective action responses to the citation(s) or report(s).

01.A.13 Before beginning each work activity involving a type of work presenting hazards not experienced in previous project operations or where a new work crew or sub-contractor is to perform the work, the Contractor(s) performing that work activity shall prepare an AHA. ***> See Figure 1-2 for an outline of an AHA.***

FIGURE 1-2

ACTIVITY HAZARD ANALYSIS

ACTIVITY HAZARD ANALYSIS ACTIVITY _____ ANALYZED BY/DATE _____		
PRINCIPAL STEPS	POTENTIAL SAFETY/HEALTH HAZARDS	RECOMMENDED CONTROLS
Identify the principal steps involved and the sequence of work activities	*Analyze each principal step for potential hazards*	*Develop specific controls for potential hazard*
EQUIPMENT TO BE USED	INSPECTION REQUIREMENTS	TRAINING REQUIREMENTS
List equipment to be used in the work activity	*List inspection requirements for the work activity*	*List training requirements, including hazard communication*

a. AHAs will define the activities being performed and identify the sequences of work, the specific hazards anticipated, site conditions, equipment, materials, and the control measures to be implemented to eliminate or reduce each hazard to an acceptable level of risk.

b. Work will not begin until the AHA for the work activity has been accepted by the GDA and discussed with all engaged in the activity, including the Contractor, subcontractor(s), and Government on-site representatives at preparatory and initial control phase meetings.

c. The names of the competent/qualified person(s) required for a particular activity (i.e., excavations, scaffolding, fall protections, other activities as specified by OSHA and this manual) will be identified and included in the AHA. Proof of their competency/ qualification must be submitted to the GDA for acceptance prior to the start of that work activity.

d. The AHA will be reviewed and modified as necessary to address changing site conditions, operations, or change of competent/qualified person(s).

(1) If more than one competent/qualified person will be used on the AHA activity, a list of names shall be submitted as an attachment to the AHA. Those listed shall be competent/ qualified for the type of work involved in the AHA and familiar with current site safety issues.

(2) If a new competent/qualified person (not on the original list) is added, the list shall be updated (an administrative action not requiring an updated AHA). The new person shall acknowledge in writing that he/she has reviewed the AHA and is familiar with current site safety issues.

01.A.14 An AHA shall be prepared and documented for each USACE activity as warranted by the hazards associated with the activity. Generally, an AHA shall be prepared for all field operations.

a. The GDA, using the advice of the safety and occupational health office, shall determine the need for an AHA for each activity within their area of responsibility.

b. In developing the AHA for a particular activity, USACE supervisors should draw upon the knowledge and experience of employees in that activity and the safety and occupational health office.

c. The Government will use this process to assess and manage the risk associated with the project.

01.A.15 To assure compliance with this manual, the Contractor may be required to prepare for review specific safety and occupational health submittal items. These submittal items may be specifically required by this manual or may be identified in the contract or by the Contracting Officer's Representative (COR). All safety and occupational health submittal items shall be written in English and provided by the Contractor to the GDA.

01.A.16. The COR or his/her designated representative may immediately stop work when an employee is deemed to be in imminent danger of serious injury or loss of life. ***> See Federal Acquisition Regulation (FAR) Clause 52.236-13(d).***

01.A.17 The Contractor shall employ a competent person at each project to function as the Site Safety and Health Officer (SSHO). The SSHO will manage the Contractor's APP. (This may be a collateral duty responsibility unless specified differently in the contract.) ***> See Appendix A, paragraphs 4 and 7.*** The person(s), as a minimum, must have completed the 10-hour OSHA Construction safety class or an equivalent course applicable to the work to be performed and given by qualified instructors. Such training shall have been within the last three (3) years. An SSHO shall be on-duty at all times when work is being performed and shall be responsible for enforcing and implementing the Contractor's Safety and Health Program in accordance with the accepted APP.

01.A.18. The Prime Contractor is responsible for assuring subcontractor compliance with the safety and occupational health requirements contained in this manual.

01.B INDOCTRINATION AND TRAINING

01.B.01 A qualified person(s) shall conduct all training required by this manual.

01.B.02 Employees shall be provided safety and health indoctrination prior to the start of work and continuing safety and health training to enable them to perform their work in a safe manner. Employee indoctrinations will be documented in writing by date, name, and content.

01.B.03 Indoctrination and training shall be based on the safety and health program of the Contractor or Government agency, as applicable, and shall include but not be limited to:

a. Requirements and responsibilities for accident prevention and maintaining safe and healthful work environments;

b. General safety and health policies and procedures and pertinent provisions of this manual;

c. Employee and supervisor responsibilities for reporting all accidents;

d. Provisions for medical facilities and emergency response and procedures for obtaining medical treatment or emergency assistance;

e. Procedures for reporting and correcting unsafe conditions or practices;

f. Job hazards and the means to control/eliminate those hazards, including applicable position and/or activity hazard analyses; and

g. Specific training as required by this manual.

01.B.04 All visitors to USACE Government or Contractor controlled sites hosting hazardous conditions will be briefed by a qualified person on the hazards to be expected on the site and the safety and health controls required (i.e., hard hat, foot protection, etc.). The person-in-charge of the site will assure that all visitors entering the site are properly protected and are wearing or provided with the appropriate personal protective equipment (PPE). Site personnel should maintain a stock of common PPE (i.e., hard hats, eye protection, ear plugs, reflective vests, etc.) for use by visitors. The site manager will provide an escort for all visitors while on site. A visitor sign-in log will be maintained on site.

01.B.05 Safety meetings shall be conducted to review past activities, plan for new or changed operations, review pertinent aspects of appropriate AHA (by trade), establish safe working procedures for anticipated hazards, and provide pertinent safety and health training and motivation.

a. Meetings shall be conducted at least once a month for all supervisors on the project location and at least once a week by supervisors or foremen for all workers.

b. Meetings shall be documented, including the date, attendance, subjects discussed, and names of individual(s) who conducted the meeting. Documentation shall be maintained and copies furnished to the GDA on request.

c. The GDA will be informed of all scheduled meetings in advance and be invited to attend.

01.B.06 A hazard communication program shall be implemented in accordance with 29 Code of Federal Regulations (CFR) 1910.1200 or 1926.59.

a. The written hazard communication program shall address, as a minimum, the following: training (to include potential safety and health effects from exposure), labeling, current inventory of hazardous chemicals on site, and the location and use of Material Safety Data Sheets (MSDSs).

b. When hazardous substances are brought onto the job site, all employees potentially exposed to the substance will be advised of information in the MSDS for the substance.

c. A copy of the MSDS for each hazardous substance at the project will be maintained in an inventory, will be provided to the GDA, and will be made available to all potentially exposed employees. For emergency response purposes, each entry in the inventory shall include the approximate quantities (e.g., liters, kilograms, gallons, pounds) that will be on site at any given time. In addition, a site map will be attached to the inventory showing where inventoried hazardous substances are stored. The inventory and the site map will be updated as frequently as necessary to ensure accuracy. ***> The inventory and site map shall be integrated into requirements of this Section and 06.B.01.***

01.B.07 Emergency situations.

a. The employer shall provide training in handling emergency situations that may arise in the activities or use of equipment on the project.

b. All persons who may have occasion to use emergency and rescue or lifesaving equipment shall be familiarized with the location of the equipment, trained in the proper use of the equipment and its capabilities and limitations, and medically qualified for its use.

01.C PHYSICAL QUALIFICATIONS OF EMPLOYEES

01.C.01 All persons shall be physically, medically, and emotionally qualified for performing the duties to which they are assigned. Some factors to be considered in making work assignments are strength, endurance, agility, coordination, and visual and hearing acuity.

01.C.02 At no time while on duty may employees use or be under the influence of alcohol, narcotics, intoxicants, or similar mind-altering substances. Employees found under the influence of or consuming such substances will be immediately removed from the job site. Contractors shall enforce the drug-free workplace requirements specified in Appendix A as part of their APP.
> See Appendix A.

01.C.03 Operators of any equipment or vehicle shall be able to read and understand the signs, signals, and operating instructions in use.

01.C.04 Operators shall not be permitted to operate beyond the following limits: ***> See Section 19 for Marine activities.***

a. Operators of equipment, such as hoisting equipment and draglines, mobile construction equipment, electrical power systems, hydropower plants, industrial manufacturing systems, hydraulically operated equipment, powered vessels, and boats, shall not be permitted to exceed 12 hours of duty time in any 24-hour period, including time worked at another occupation. A minimum of 8 consecutive hours will be provided for rest in each 24-hour period.

b. Operators of motor vehicles, while on duty, shall not operate vehicles for a continuous period of more than 10 hours in any 24-hour period; nor shall any employees, while on duty, operate motor vehicles after being in a duty status for more than 12 hours during any 24-hour period. A minimum of 8 consecutive hours will be provided for rest in each 24-hour period.

01.C.05 Compressed-air workers.

a. No person shall be permitted to enter a compressed-air environment until examined by a licensed physician and found to be physically qualified to engage in such work.

b. Any person working in a compressed-air environment who is absent from work for 10 or more days, or is absent due to sickness or injury, shall not resume work until reexamined by a licensed physician, and found to be physically qualified to work in a compressed-air environment.

c. After a person has been continuously employed in compressed air for a period designated by a physician, but not to exceed 1 year, that person shall be reexamined by a physician to determine if he/she is still physically qualified to engage in compressed-air work.

d. All other requirements for compressed-air work will be as specified in the contract technical provisions.

01.D ACCIDENT REPORTING AND RECORDKEEPING

01.D.01 All accidents that occur incidentally to an operation, project, or facility for which this manual is applicable will be investigated, reported, and analyzed as prescribed by the GDA.

a. Employees are responsible for reporting all injuries or occupationally related illnesses as soon as possible to their employer or immediate supervisor.

b. Employers and immediate supervisors are responsible for reporting all injuries to the GDA within 24 hours.

c. No supervisor shall decline to accept a report of injury from a subordinate.

01.D.02 An accident that appears to have any of the consequences listed below shall be immediately reported to the GDA. These accidents will be investigated in depth to identify all causes and to recommend hazard control measures. The GDA shall immediately notify the Safety and Occupational Health Office of all serious accidents and follow-up with official accidents reports as prescribed by regulation. ***> Contractors are responsible for notifying OSHA when one or more of their employees are seriously injured.***

a. Fatal injury,

b. Permanent totally disabling injury,

c. Permanent partial disabling injury,

d. Three or more persons admitted to a hospital, or

e. Property damage in an amount specified by USACE current accident reporting regulations.

01.D.03 Except for rescue and emergency measures, the accident scene shall not be disturbed until it has been released by the investigating official. The Contractor is responsible for obtaining appropriate medical and emergency assistance and for notifying fire, law enforcement, and regulatory agencies. The Contractor must assist and cooperate fully with the GDA conducting the Government investigation(s) of the accident.

01.D.04 Daily records of all first-aid treatments not otherwise reportable shall be maintained on prescribed forms and furnished to the GDA upon request.

01.D.05 In addition to any other applicable requirements of this section on contract operations, the Prime Contractor shall:

a. Maintain records of all exposure and accident experience incidental to the work (this includes exposure and accident experience of the Prime Contractor and subcontractors and, as

a minimum, these records shall include exposure work hours and a log of occupational injuries and illnesses - OSHA Form 300 or equivalent as prescribed by 29 CFR 1904; provide a current copy of OSHA Form 300 or equivalent to the GDA upon request;

b. Maintain health hazard assessment documentation and employee exposure monitoring to chemical, biological, and physical agents as required by Section 06. Provide this information to employees who are characterized by these assessments and exposure monitoring in accordance with OSHA requirements. Immediately notify the GDA of any exposure in excess of the limits specified in Section 06 and the hazard control measures that has been taken to reduce or eliminate such exposures.

c. Submit project work hours to the COR monthly on the form provided by the COR. Work hours include all hours on the project where an employee is in an on-duty pay status.

01.E EMERGENCY PLANNING

01.E.01 Emergency plans to ensure employee safety in case of fire or other emergency shall be prepared, in writing, and reviewed with all affected employees. Emergency plans shall be tested to ensure their effectiveness. ***>See 28 A 03 for emergency planning procedures for storing and handling hazardous substances.***

a. Plans shall include escape procedures and routes, critical plant operations, employee accounting following an emergency evacuation, rescue and medical duties, means of reporting emergencies, and persons to be contacted for information or clarification.

b. On-site emergency planning shall be integrated with off-site emergency support. (Documentation of specific on-site emergency services shall be made. This can include written agreements, memorandum for record, telephone conversation

logs, etc. The emergency services provider should be offered an on-site orientation of the project and associated hazards.)

01.E.02 Planning for any operation shall include the total system response capabilities to minimize the consequences of accidents or natural disaster and shall consider communications, rescue, first aid, medical, emergency response, emergency equipment, and training requirements.

01.E.03 The number of persons permitted in any location shall be limited to rescue and escape capability.

01.E.04 Emergency alert systems shall be developed, tested, and used to alert all persons likely to be affected by existing or imminent disaster conditions and to alert and summon emergency responders.

01.E.05 Emergency telephone numbers and reporting instructions for ambulance, physician, hospital, fire, and police shall be conspicuously posted at the work site.

01.E.06 Employees working alone in a remote location or away from other workers shall be provided an effective means of emergency communications. This means of communication could include a cellular phone, two-way radios, hard-line telephones or other acceptable means. The selected communication must be readily available (easily within the immediate reach) of the employee and must be tested prior to the start of work to verify that it effectively operates in the area/environment. An employee check-in/check-out communication procedure shall be developed to assure employee safety.

01.F EMERGENCY RECOVERY OPERATIONS.

01.F.01 In addition to the other pertinent parts of this manual, Civil Emergency Recovery Operations shall be conducted in accordance with Appendix B for both USACE and Contractor activities.

SECTION 2

SANITATION

02.A GENERAL REQUIREMENTS

02.A.01 Employers shall establish and maintain basic sanitation provisions for all employees in all places of employment as specified in the following paragraphs.

02.B DRINKING WATER

02.B.01 An adequate supply of drinking water shall be provided in all places of employment. Cool water shall be provided during hot weather.

a. Drinking water shall be provided at continental United States (CONUS) fixed facilities according to the requirements of the Safe Drinking Water Act, as amended, and all applicable Federal, State, and local regulations. Refer to the most current version of 40 CFR 141 and 40 CFR 143, for updates to the national drinking water regulations. Refer to individual State and local regulations, as applicable, for updates in those regulations. CONUS facilities classified as suppliers of water--

(1) Must comply with substantive and procedural requirements pursuant to 40 CFR 141;

(2) Must meet any State and local regulations that are more stringent than the Federal regulations; and

(3) Shall ensure that the sanitary control and surveillance of water supplies and that the chlorination and fluoridation are conducted according with applicable guidelines.

b. Drinking water at military outside continental United States (OCONUS) fixed facilities shall be provided in compliance with country-specific Final Governing Standards (FGS) or, in the absence of FGS, the National Primary Drinking Water Regulations (NPDWR) as outlined in the Overseas Environmental Baseline Guidance Document (OEBGD) (Department of Defense Instruction (DODI) 4715.5-G). In addition, the sanitary control and surveillance of water supplies and the chlorination and fluoridation shall be conducted according to applicable Department of Defense (DOD) Component guidelines, or if more stringent, the host nation requirements.

c. Drinking water for field activities shall be provided according to the procedures defined in Army Regulation (AR) 700-136; Field Manual (FM) 10-52; FM 21-10/Marine Corps Reference Publication (MCRP) 4-11.1D; and Technical Bulletin, Medical (TB MED) 577.

d. Drinking water on all Army floating vessels is provided according to 40 CFR 141 and chapter 6 of Navy Medical (NAVMED) P-5010-010-LP-207-1300.

02.B.02 Only approved potable water systems shall be used for the distribution of drinking water.

02.B.03 Drinking water shall be dispensed by means that prevent contamination between the consumer and the source.

02.B.04 Portable drinking water dispensers shall be designed, constructed, and serviced to ensure sanitary conditions; shall be capable of being closed; and shall have a tap. Containers shall be clearly marked as **"DRINKING WATER"** and shall not be used for other purposes. Water shall not be dipped from containers.

02.B.05 Fountain dispensers shall have a guarded orifice.

02.B.06 Use of a common cup (a cup shared by more than one worker) is prohibited without the cup being sanitized between uses. Employees shall use cups when drinking from portable water coolers/containers. Unused disposable cups shall be kept in sanitary containers and a waste receptacle shall be provided for used cups.

02.B.07 Nonpotable water.

a. Outlets dispensing nonpotable water will be conspicuously posted **"CAUTION - WATER UNSAFE FOR DRINKING, WASHING, OR COOKING." (Outlets dispensing nonpotable water at Corps Dumping Stations within campgrounds may, in lieu of this requirement, be posted in accordance with USACE's Engineering Pamphlet (EP) 310-1-6A and EP 310-1-6B.)**

b. Cross-connection - open or potential - between a system furnishing potable water and a system furnishing nonpotable water is prohibited.

02.C TOILETS

02.C.01 When sanitary sewers are not available, one of the following facilities, unless prohibited by local codes, shall be provided: chemical toilets, recirculating toilets, combustion toilets, or other toilet systems as approved by State/local governments.

02.C.02 Each toilet facility shall be equipped with a toilet seat and toilet seat cover. Each toilet facility - except those specifically designed and designated for females - shall be equipped with a metal, plastic, or porcelain urinal trough. All shall be provided with an adequate supply of toilet paper and a holder for each seat.

02.C.03 Toilet facilities shall be so constructed that the occupants shall be protected against weather and falling objects; all cracks shall be sealed and the door shall be tight-fitting, self-closing, and capable of being latched.

02.C.04 Adequate ventilation shall be provided and all windows and vents screened; seat boxes shall be vented to the outside (minimum vent size 4 inches (in) (10.1 centimeters (cm)) inside diameter) with vent intake located 1 in (2.5 cm) below the seat.

02.C.05 Toilet facilities shall be constructed so that the interior is lighted.

02.C.06 Toilets at construction job sites. (The requirements of this paragraph shall not apply to mobile crews having transportation readily available to nearby toilet facilities.)

a. Toilets shall be provided according to Table 2-1. Where toilet rooms may be occupied by no more than one person at a time, can be locked from the inside, and contain at least one toilet seat, separate toilet rooms for each sex need not be provided.

b. Under temporary field conditions, provisions shall be made to assure that at least one toilet facility is available.

TABLE 2-1

MINIMUM TOILET FACILITIES (CONSTRUCTION SITES)

Number of Employees	Minimum Facilities (per sex)
20 or less	One
21 to 199	One toilet seat and one urinal for every 40 workers
200 or more	One toilet seat and one urinal for every 50 workers

02.C.07 Toilets at places of employment other than construction job sites.

a. Water closets, which are separate for each sex, shall be provided according to Table 2-2. Where toilet rooms may be occupied by no more than one person at a time, can be locked

from the inside, and contain at least one toilet seat, separate toilet rooms for each sex need not be provided.

TABLE 2-2

MINIMUM TOILET FACILITIES
(OTHER THAN CONSTRUCTION SITES)

Number of Employees	Minimum Facilities (per sex)
1 to 15	one
16 to 35	two
36 to 55	three
56 to 80	four
81 to 110	five
111 to 150	six
Over 150	one for each additional 40 persons

b. Each water closet shall occupy a separate compartment with a door that can lock from the inside and walls or partitions, between fixtures, of sufficient height to assure privacy.

02.C.08 Provisions for routinely servicing and cleaning all toilets and disposing of the sewage shall be established before placing toilet facilities into operation. The method of sewage disposal and location selected shall be in accordance with Federal, State, and local health regulations.

02.D WASHING FACILITIES

02.D.01 Washing facilities shall be provided <u>at toilet facilities and</u> as needed to maintain healthful and sanitary conditions. Washing

facilities for persons engaged in the application of paints, coatings, herbicides, insecticides, or other operations where contaminants may be harmful shall be at or near the work site and shall be adequate for removal of the harmful substance.

02.D.02 Each washing facility shall be maintained in a sanitary condition and provided with water (either hot and cold running water or tepid running water), soap, and individual means of drying. However, where it is not practical to provide running water, hand sanitizers may be used as a substitute.

02.D.03 Whenever employees are required by a particular standard to shower, showers shall be provided in accordance with the following:

a. One shower shall be provided for every ten employees (or fraction thereof) of each sex who are required to shower during the same shift;

b. Body soap or other appropriate cleansing agent convenient to the shower shall be provided;

c. Showers shall have hot and cold running water feeding a common discharge line; and

d. Employees using showers shall be provided with individual clean towels.

02.D.04 Whenever employees are required by a particular standard to wear protective clothing, change rooms with storage facilities for street clothes and separate storage facilities for protective clothing shall be provided.

02.D.05 Whenever working clothes are provided by an employer and become wet or are washed between shifts, provision shall be made to ensure such clothing is dry before reuse.

02.E FOOD SERVICE

02.E.01 All cafeterias, restaurants, mess facilities, and related facilities on areas, projects, or installations shall be established, operated, and maintained in compliance with the health and sanitation recommendations of the United States Public Health Service and applicable State and local regulations.

02.E.02 All food service operations shall be carried out in a sound manner. Food shall be free from spoilage and kept uncontaminated throughout the storage, preparation, and serving process.

02.E.03 No food or beverage shall be consumed or stored in a toilet room or in any area exposed to a toxic material.

02.E.04 An adequate number of waste receptacles shall be provided in the food service area. Receptacles shall be constructed of corrosion resistant or disposable material, provided with solid tight-fitting covers (covers may be omitted where sanitary conditions can be maintained without the use of a cover), emptied at least daily, and maintained in a sanitary condition.

02.F WASTE DISPOSAL

02.F.01 Receptacles used for putrescible or liquid waste material shall be so constructed to prevent leakage and to allow thorough cleaning and sanitary maintenance. These receptacles shall be equipped with a solid tight-fitting cover, unless it can be maintained in sanitary condition without a cover. ***> Disposal of rubbish, debris, and litter is covered in 14.D.***

02.F.02 Solid and liquid waste shall be removed in a way that avoids creating a menace to health and as often as necessary to maintain a sanitary environment.

02.G VERMIN CONTROL

02.G.01 Enclosed workplaces shall be constructed and maintained, as far as practical, to prevent the entrance or harborage of rodents, insects, and other vermin. An effective

rogram shall be instituted where the presence of
detected.

SECTION 3

MEDICAL AND FIRST-AID REQUIREMENTS

03.A GENERAL

03.A.01 Prior to start of work, arrangements shall be made for medical facilities and personnel to provide prompt attention to the injured and for consultation on occupational safety and health matters.

a. An effective means of communication (hard-wired or cellular telephone, two-way radio, etc.) with 911 access or other emergency response source and transportation to effectively care for injured workers shall be provided. Communication devices shall be tested in the area of use to assure functionality.

b. The telephone numbers of physicians, hospitals, or ambulances shall be conspicuously posted (at the minimum, these numbers shall be posted at the on-site project office telephones).

c. A map delineating the best route to the nearest medical facility shall be prepared and posted on the safety bulletin board.

03.A.02 First-aid and cardiopulmonary resuscitation (CPR) training.

a. When a medical facility or physician is not accessible within 5 minutes of an injury to a group of two or more employees for the treatment of injuries, at least two employees on each shift shall be qualified to administer first aid and CPR. ***> Minimum qualifications are listed in 03.D.***

b. Individuals who are required to work alone in remote areas shall be trained in first aid and provided an effective means of

communication to call for assistance in the event of an emergency.

03.A.03 First-aid and medical facility requirements.

a. All projects, activities, installations, or contracts on which less than 100 persons are employed (greatest total number of employees on a shift) at the site of the work, and where neither a first-aid station nor infirmary is available, shall be provided with a first-aid kit complying with the criteria contained in American National Standards Institute (ANSI) Z308.1-1998 in the ratio of one for every 25 persons or less. In addition to the basic fill requirements, the employer, in consultation with a health care professional or competent first aid person, shall evaluate the hazards found in the work environment to determine the necessity of optional fill contents.

b. All projects, activities, installations, or contracts on which more than 99 and less than 300 persons are employed (greatest total number of employees on a shift) at the site of the work shall establish and equip, as directed by a licensed physician, a first-aid station. In non-rural locations, medical clinics, hospitals, or doctors' office, accessible within 5 minutes of an injury may be approved for use provided the requirements of 03.A.03a are met.

c. Where tunnels are being excavated, a first-aid station and transportation facilities shall be provided so that treatment is available within 5 minutes of the occurrence of an injury.

d. All projects, activities, installations, or contracts on which 300 or more persons are employed (greatest total number of employees on a shift) at the site of the work shall establish and equip, as directed by a licensed physician, an infirmary.

03.A.04 When any part of the body may be exposed to toxic or corrosive materials, drenching and/or flushing facilities shall be provided in the work area for immediate emergency use. ***> See Section 06.B.***

03.A.05 When persons are exposed to epoxy resins, solvents, hydrocarbons, cement, lime, or other dermatitis-producing substances, ointment recommended by the manufacturer for the specific exposure shall be available and shall be used.

03.A.06 Employees designated as responsible for rendering first aid or medical assistance shall be included in their employer's blood-borne pathogen program in accordance with 29 CFR 1910.1030 and shall:

a. Be instructed in the sources, hazards, and avoidance of blood-borne pathogens and be provided the training requirements specified in 29 CFR 1910.1030;

b. Be provided with, and shall use and maintain, PPE (i.e., CPR barrier, gloves, gowns, masks, eye protectors, and/or resuscitation equipment) when appropriate for rendering first aid or other medical assistance to prevent contact with blood or other potentially infectious materials;

c. Institute a blood-borne pathogen prevention program to include an Exposure Control Plan with provisions for engineering and administrative controls, Hepatitis B vaccination, PPE, training, recordkeeping, and a Post-Exposure Control Plan in the event of a blood-borne exposure. Post-exposure protocol must include a plan to assure immediate medical evaluation of exposed individual(s) per current recommendations of the Centers for Disease Control (CDC) for human immuno-deficiency virus (HIV), hepatitis B virus (HBV), hepatitis C virus (HCV) and hepatitis A virus (HAV).

03.A.07 Prior to the start of work, the employer shall inform employees of prevention steps, symptom recognition, and medical assets available if they are traveling to areas recognized by the CDC or are required to perform work activities in areas known to be a potential source of disease transmission such as Lyme Disease, West Nile Virus, Hantavirus, Histoplasmosis, Human Ehrlichiosis, Rabies, Rocky-Mountain Spotted Fever, Dengue Fever, Malaria and other vectore-borne diseases.

a. The employer may use the CDC fact sheets and other sources for available information for such awareness training and travel purposes. CDC information can be found at the following website: http://www.cdc.gov/travel/diseases.

b. Issues to consider when traveling in areas where such diseases are endemic include:

(1) Modes of disease transmission.

(2) Specific health risks associated with the disease.

(3) Preventive measures such as available vaccines and PPE (gloves, eye and skin protection, respirator).

(4) Appropriate work practices to prevent contact with infected agents (bird/rodent droppings, etc.), such as watering areas prior to dust-generating activities.

(5) Vaccine information, to include information on the effectiveness, risks, and availability.

(6) Safe removal of source where applicable.

(7) Symptom recognition and medical referral.

03.B FIRST-AID KITS

03.B.01 Unless otherwise specified, where first-aid kits are required, they shall be Type III, 16-unit, first-aid kits (kits containing 16 unit-type first-aid packages) containing the minimum fill contents (Table 3-1), and one pocket mouth piece or CPR barrier. First-aid kits shall be easily accessible to all workers, protected from the weather, and each item maintained sterile. First-aid kit locations should be clearly marked and distributed throughout the site(s).

03.B.02 The contents of first-aid kits shall be checked by the employer prior to their use and at least weekly when work is in progress to ensure that expended items are replaced.

TABLE 3-1

REQUIREMENTS FOR BASIC UNIT PACKAGES

Unit first aid item	Minimum Size or Volume (metric)	Minimum Size or Volume (US)	Item quantity per unit package	Unit package size
* Absorbent Compress	60 sq. cm	24 sq. in	1	1
* Adhesive Bandage	2.5 x 7.5 cm	1 x 3 in.	16	1
* Adhesive Tape	457.2 cm	5 yd (total)	1 or 2	1 or 2
* Antiseptic Swab	0.5 g	0.14 fl. oz.	10	1
Antiseptic Wipe	2.5 x 2.5 cm	1 x 1 in.	10	1
Antiseptic Towelette	60 sq. cm	24 sq. in.	10	1
Bandage Compress (2 in.)	5 x 91 cm	2 x 36 in.	4	1
Bandage Compress (3 in.)	7.5 x 152 cm	3 x 60 in.	2	1
Bandage Compress (4 in.)	10 x 183 cm	4 x 72 in.	1	1
* Burn Treatment	0.5 g	0.14 fl. oz.	6	1
Eye Covering, with means of attachment			1	1
Eye Wash	30 ml	1 fl. oz. total	1	2
Eye Wash & Covering, with means of attachment			1	2
Gloves			2 pair	1
Roller Bandage (4 in.)	10 x 550 cm	4 in. x 6 yd.	1	1
Roller Bandage (2 in.)	5 x 550 cm	2 in. x 6 yd.	2	1
* Sterile pad	7.5 x 7.5 cm	3 x 3 in.	4	1
* Triangular Bandage	101 x 101 x 142 cm	40 x 40 x 56 in.	1	1

* Minimum mandatory contents for basic fill kit. Additional items from this table are needed to meet 16-unit kit requirement.

03.B.0 3 Automatic External Defibrillator (AED)

a. The placement of AEDs is optional (except for infirmaries see 03.C.03d), but encouraged. The placement of AEDs on the worksite must be preceded by an assessment of the time and distance to emergency medical services (EMS) and a justified need for such equipment.

b. An AED program shall include as a minimum:

(1) Appropriate training and certification of identified operators.

(2) Physician oversight and assessment.

(3) Standard Operating Procedure (SOP) for EMS activation and outcome oversight.

(4) Equipment Maintenance Program.

03.C FIRST-AID STATIONS AND INFIRMARIES

03.C.01 General.

a. On activities requiring a first-aid station or an infirmary, the type of facilities and equipment shall be determined by the proximity and quality of available medical services and shall be in accordance with the recommendation of a licensed physician. Alternative facilities that provide the quantity and quality of services outlined in this section may be used if recommended by a licensed physician.

b. Identification and directional markers shall be used to readily denote the location of all first-aid stations and infirmaries.

c. Emergency lighting shall be provided for all first-aid stations and infirmaries.

03.C.02 A first-aid attendant shall be on duty in first-aid stations at all hours when work is in progress (except when on emergency calls).

03.C.03 Infirmaries.

a. Infirmaries shall provide reasonably quiet, privacy, light, climate control, adequate toilet facilities, hot and cold water, drainage, and electrical outlets; walls and ceilings shall be finished with the equivalent of two coats of white paint; windows and doors will be screened; floors shall be of impervious construction.

b. A properly equipped emergency vehicle, helicopter, or mobile first-aid unit shall be provided during work hours at sites requiring an infirmary. The emergency vehicle shall not be used for any other purpose, except that the helicopter may be used for shift crew changes.

c. A registered nurse (RN), a licensed physician's assistant, a certificated emergency medical technician (EMT), or a licensed practical nurse (LPN) (if the LPN is approved by a licensed physician) shall be assigned on a full-time basis to each installation requiring an infirmary.

d. Infirmaries shall be equipped with an AED.

03.D PERSONNEL REQUIREMENTS AND QUALIFICATIONS

03.D.01 All projects, installations, activities, or contracts on which 1,000 persons or more are employed (greatest total aggregate number of employees on a shift) shall have the full-time services of a licensed physician. An EMT having direct communication with a licensed physician may be used when a full-time physician is not available.

03.D.02 First-aid attendants shall hold certification in first-aid and CPR training from the American Red Cross, the American Heart Association, or from an organization whose training is deemed

equivalent by one of these organizations (and this equivalency is stated in writing), or from a licensed physician. The certificate(s) shall state the date of issue and length of validity.

03.D.03 First-aid attendants, RNs, licensed physicians' assistants, LPNs, and EMTs shall be under the direction of a licensed physician.

03.D.04 Military personnel with equivalent qualificatio
used in lieu of the above personnel.

SECTION 4

TEMPORARY FACILITIES

04.A GENERAL

04.A.01 Plans for the layout of temporary construction buildings, facilities, fencing, and access routes and anchoring systems for temporary structures shall be submitted to and approved by the GDA. ***> See 09.A.19 for temporary facility spacing requirements; Section 11 for temporary power distribution approval requirements; and Sections 21 and 22 for temporary ramp, trestle, scaffold, and platform approval requirements.***

04.A.02 The design and construction of temporary structures shall consider the following loadings (reference American Society of Civil Engineers (ASCE) 7-98):

a. Dead and live loads,

b. Soil and hydrostatic pressures,

c. Wind loads,

d. Rain and snow loads, and

e. Seismic forces.

04.A.03 Trailers and other temporary structures used as field offices, to house personnel, or for storage shall be anchored with rods and cables or by steel straps to ground anchors. The anchor system shall be designed to withstand winds and must meet applicable State or local standards for anchoring mobile trailer homes.

04.A.04 Fencing and warning signs.

a. Temporary project fencing (or a substitute acceptable to the GDA and delineated in the APP) shall be provided on all projects located in areas of active use by members of the public. Consideration will also be given to those areas proximate to family housing areas and/or school facilities.

b. Signs warning of the presence of construction hazards and requiring unauthorized persons to keep out of the construction area shall be posted on the fencing. At the minimum, posting shall be on all fenced sides of the project and spaced one sign every 300 feet (ft) (91.4 meters (m)). **> *See also Section 8.***

c. For areas of minimal public exposure, fencing is not required, but signs, warning of construction hazards, shall be posted.

04.A.05 Temporary Work Camps (Floating plant excluded).

a. All sites used for temporary work camps shall be adequately drained. They shall not be subject to periodic flooding nor located within 200 ft (60.9 m) of swamps, pools, sink holes, or other surface collections of water unless adequate mosquito control methods have been implemented. The sites shall be graded, ditched, and rendered free from depressions in which water may become a nuisance.

b. Sites shall be sized to prevent overcrowding of necessary structures.

c. The grounds and open areas surrounding the shelters shall be maintained free of rubbish, debris, waste paper, garbage, or other refuse.

d. Shelters will provide protection from the elements, and each room used for sleeping purposes shall contain at least 50 square feet (ft^2) (4.6 square meters (m^2)) of floor space for each occupant and at least 7-ft, 6-in (2.3-m) ceilings.

e. Beds, cots, or bunks, and suitable storage facilities (such as wall lockers for clothing and personal articles) shall be provided in every room used for sleeping purposes. Beds shall be spaced not closer than 36 in (91.4 cm) both laterally and end-to-end and shall be elevated at least 12 in (30.4 cm) from the floor. Double-decked bunk beds shall be spaced not less than 48 in (121.9 cm) both laterally and end-to-end with a minimum space of not less than 27 in (68.5 cm) between the upper and lower bunk. Triple deck bunks are prohibited.

f. Floors shall be constructed of wood, asphalt, or concrete. Wooden floors shall be of smooth and tight construction. Floors shall be kept in good repair.

g. Living quarters shall be provided with windows that may be opened for purposes of ventilation.

h. All exterior openings shall be effectively screened with 16-mesh material and screen doors shall be equipped with self-closing devices.

i. Temporary sleeping quarters shall be heated, ventilated, lighted, and maintained in a clean and safe condition.

j. Sleeping quarters must comply with the National Fire Protection Agency (NFPA) 101.

04.A.06 Unless otherwise indicated, throughout this manual, lumber dimensions are given in nominal sizes.

SECTION 5

PERSONAL PROTECTIVE AND SAFETY EQUIPMENT

05.A GENERAL

05.A.01 Responsibilities.

a. Based on hazard evaluations (conducted by supervisors), employers shall select, and have each affected employee use, PPE that will protect the employee from hazards. ***> See also 06.A.02.***

b. Employers shall communicate PPE decisions to each affected employee and select PPE that properly fits each affected employee.

c. Employees shall use all PPE that may be required to maintain their exposure within acceptable limits.

d. The employer will make all reasonable efforts to accommodate employees with religious beliefs that may conflict with the PPE requirements contained within this manual. However, when reasonable efforts to accommodate the employee's religious beliefs do not provide the necessary safe working environment (without PPE), then the employer shall require the employee to use the appropriate PPE or the employee will not be allowed to work in the area where he/she will be exposed to the hazard requiring protection.

05.A.02 Employees shall be physically able and medically determined qualified to use the personal protective and safety equipment that may be required in their job duties.

05.A.03 Employers shall ensure users of personal protective and safety equipment are trained to know the following: when PPE, and what types of PPE are necessary; how to properly don, doff, adjust,

and wear PPE; limitations of the PPE; and proper care, inspection, testing, maintenance, useful life, storage, and disposal of the PPE.

a. Each affected employee shall demonstrate an understanding of this training and the ability to use PPE properly before being allowed to perform work requiring the use of PPE.

b. When the employer has reason to believe that any affected employee who has been trained does not have the understanding and skill required for the use of the PPE, the employer shall assure the employee receives the necessary retraining to acquire the appropriate skills.

c. The employer shall verify that each affected employee has received and understood the required training by a written certification that identifies the name of each employee trained, the date(s) of the training, and the subjects taught.

05.A.04 A copy of the manufacturer's use, inspection, testing, and maintenance instructions shall be maintained with the personal protective and safety equipment.

05.A.05 Personal protective and safety equipment shall be tested, inspected, and maintained in serviceable and sanitary condition as recommended by the manufacturer.

a. Defective or damaged equipment shall not be used. It shall be tagged as out of service and locked-up or immediately removed from the work site to prevent use.

b. Before being stored or reissued to another person, equipment shall be cleaned, disinfected, inspected, and repaired.

05.A.06 When employees provide their own equipment, the employer is responsible for assuring its adequacy in protecting against the hazard and its state of repair.

05.A.07 Minimum requirements.

a. Employees shall wear clothing suitable for the weather and work conditions: the minimum for fieldwork (i.e., construction sites, industrial operations and maintenance activities, emergency operations, regulatory inspections, etc.) shall be short sleeve shirt, long pants (excessively long or baggy pants are prohibited), and leather or other protective work shoes or boots.

b. Protective equipment shall be of heat/fire/chemical/electrical-resistive material when conditions require protection against such hazards.

05.A.08 Protective footwear, such as rubber boots, protective covers, ice cramp-ons, and safety-toed boots, shall be worn by all persons exposed to hazards to the feet (including, but not limited to, puncture, slipping, electrical, or chemical hazards).

a. For all activities in which USACE or contractor personnel or official visitors are potentially exposed to foot hazards, the applicable PHA/AHA, APP, or project safety and health plan shall include an analysis of, and prescribe specific protective measures to be taken for, reducing foot hazards.

b. USACE and Contractor personnel shall, as a minimum, wear safety-toed footwear meeting ANSI Z41 while working on construction sites unless it can be demonstrated by a PHA/AHA to the GDA satisfaction that a different type of foot protection is required.

c. Footwear providing protection against impact and compressive forces, conduction hazards, electrical hazards, and sole puncture shall meet the applicable requirements of ANSI Z41; footwear providing protection against impact and compression hazards shall be rated as I75 and C75.

d. Unexploded ordnance (UXO) sweep personnel shall have no metal parts in or on their footwear.

e. Personnel participating in wild land fire management activities shall wear leather lace-up boots with slip-resistant soles, such as a hard rubber lug-type or tractor tread, a top height of 8 in (20.3 cm) or more, and without steel toes. Soles should not be made of composition rubber or plastic, which have low melting points.

05.A.09 Miners' lights and flashlights used around explosives, and in atmospheres likely to contain explosive vapors, dusts, or gases shall be approved by the Mine Safety and Health Administration (MSHA) or National Institute for Occupational Safety and Health (NIOSH) for use in such locations.

05.A.10 Persons involved in activities that subject the hands to injury (e.g., cuts, abrasions, punctures, burns, chemical irritants, toxins, vibration, and forces that can restrict blood flow) shall select and use hand protection appropriate for the hazard in accordance with ANSI/International Safety Equipment Association (ISEA) 105.

05.A.11 Persons exposed to vehicular or equipment traffic, including signalpersons, spotters, or inspectors, shall wear high visibility apparel meeting ANSI/ISEA 107 Class 3 requirements.

05.A12 Protective leg chaps shall be worn by workers who operate chain saws. Protective leg chaps must meet the specifications in American Society for Testing and Materials (ASTM) Standard F1897.

05.B EYE AND FACE PROTECTION

05.B.01 Persons shall be provided with eye and face protection equipment, as outlined in Table 5-1, when machines or operations present potential eye or face injury from physical, chemical, or radiation agents.

TABLE 5-1

EYE AND FACE PROTECTOR SELECTION GUIDE

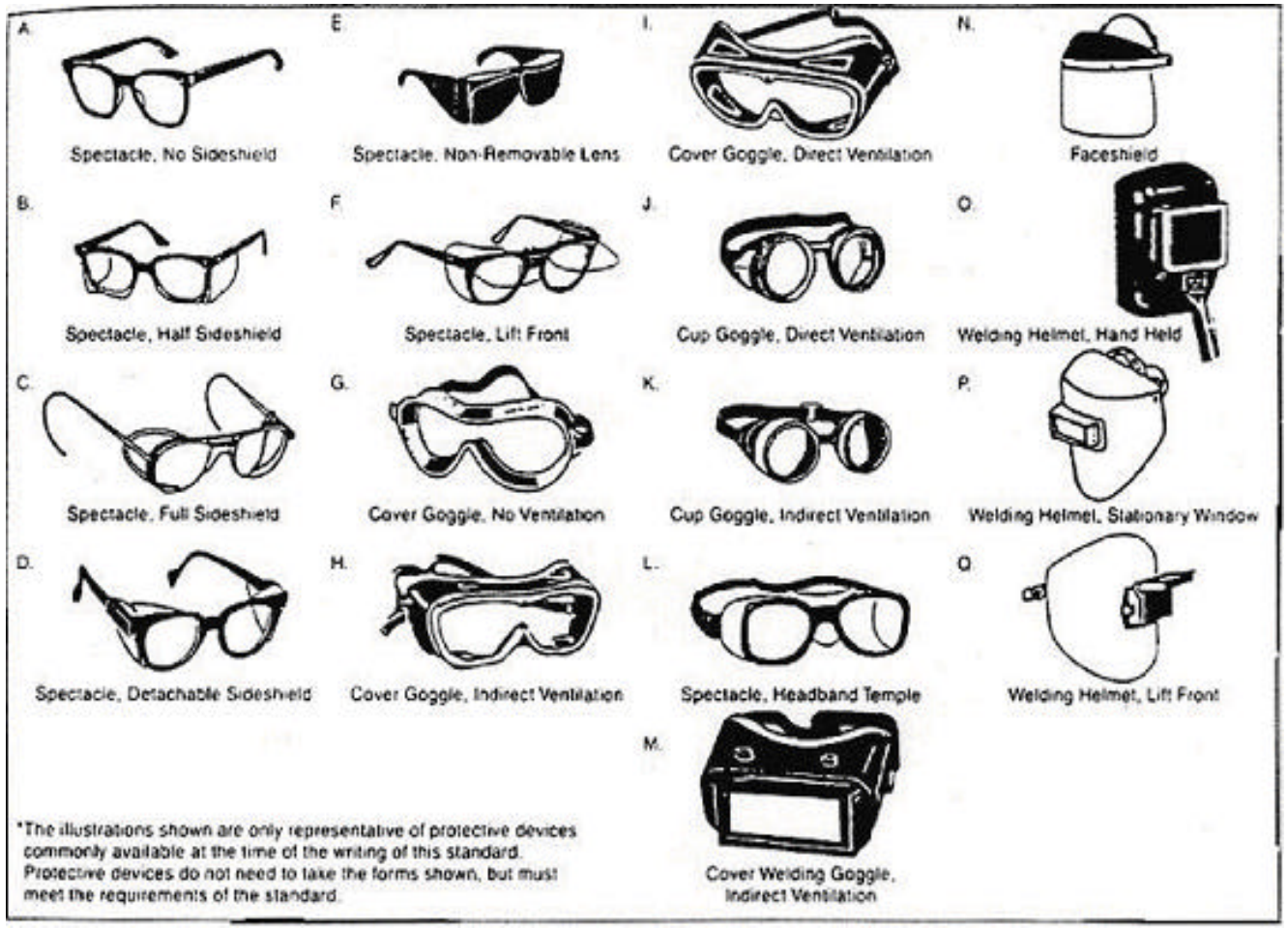

NOTES:

(1) Care should be take to recognize the possibility of multiple and simultaneous exposure to a variety of hazards. Adequate protection against the highest level of each of the hazards must be provided.

(2) Operations involving heat may also involve optical radiation. Protection from both hazards shall be provided.

(3) Faceshields shall only be worn over primary eye protection.

(4) Filter lenses shall meet the requirements for shade designations in Table 5-2.

(5) Persons whose vision requires the use of prescription (Rx) lenses shall wear either protective devices fitted with prescription (Rx) lenses or protective devices designed to be worn over regular prescription (Rx) eyewear.

(6) Wearers of contact lenses shall also be required to wear appropriate covering eye and face protection devices in a hazardous environment. It should be recognized that dusty and/or chemical environments may represent an additional hazard to contact lens wearers.

(7) Caution should be exercised in the use of metal frame protective devices in electrical hazard areas.

(8) Refer to ANSI/ASSE Z87-1, Section 6.5, Special Purpose Lenses.

(9) Welding helmets or handshields shall be used only over primary eye protection.

(10) Non-sideshield spectacles are available for frontal protection only.

Table 5-1 (CONTINUED)

EYE AND FACE PROTECTOR SELECTION GUIDE

		ASSESSMENT See Note (1)	PROTECTOR TYPE	PROTECTORS	LIMITATIONS	NOT RECOMMENDED
I M P A C T	Chipping, grinding, machining, masonry work, riveting and sanding	Flying fragments, objects, large chips, particles, sand, dirt, etc.	B, C, D, E, F, G, H, I, J, K, L, N	Spectacles, goggles, faceshields SEE NOTES (1)(3)(5)(6)(10) For severe exposures add N	Protective devices do not provided unlimited protection. SEE NOTE (7)	Protectors that do not provide protection from side exposure SEE NOTE (10) Filter or tinted lenses that restrict light transmittance, unless it is determined that a glare hazard exists. Refer to OPTICAL RADIATION.
H E A T	Furnace operations, pouring, casting, hot dipping, gas cutting, and welding	Hot sparks	B, C, D, E, F, G, H, I, J, K, L, N	Faceshields, goggles, spectacles For severe exposure add N SEE NOTE (2)(3)	Spectacles, cup and cover type goggles do not provide unlimited facial protection SEE NOTE (2)	Protectors that do not provide protection from side exposure
		Splash from molten metals	N	Faceshields worn over goggles H, K SEE NOTE (2)(3)		
		High temperature exposure	N	Screen faceshields, reflective faceshields	SEE NOTE (3)	

Table 5-1 (CONTINUED)

EYE AND FACE PROTECTOR SELECTION GUIDE

		ASSESSMENT See Note (1)	PROTECTOR TYPE	PROTECTORS	LIMITATIONS	NOT RECOMMENDED
CHEMICAL	Acid and chemical handling, degreasing, plating	Splash	G, H, K N	For severe exposure add N	Ventilation should be adequate but protected from splash entry	Spectacles, welding helmets, handshields
		Irritating mists	G	Special purpose goggles	SEE NOTE (3)	
DUST	Woodworking, buffing, general dusty conditions	Nuisance dust	G, H, K	Goggles, eyecup and cover types	Atmospheric conditions and the restricted ventilation of the protector can cause the lenses to fog. Frequent cleaning may be required.	
OPTICAL RADIATION	WELDING: electric arc	O, P, Q	TYPICAL FILTER LENSE SHADE / PRO-TEC-TORS		Protection from optical radiation is directly related to filter lens density. SEE NOTE (4). Select the darkest shade that allows adequate task performance.	Protectors that do not provide protection from optical radiation.

a. All eye and face protection equipment shall meet the requirements of ANSI/American Society of Safety Engineers (ASSE) Z87.1 and bear a legible and permanent "Z87" logo to indicate compliance with the standard.

b. Eye and face protection equipment shall be distinctly marked to facilitate identification of the manufacturer.

c. Employees shall use eye protection providing side protection.

05.B.02 When required by this regulation to wear eye protection, persons whose vision requires the use of corrective lenses in eyeglasses shall be protected by one of the following:

a. Eyeglasses with protective lenses providing optical correction,

b. Goggles that can be worn over corrective lenses without disturbing the adjustment of the spectacles, or

c. Goggles that incorporate corrective lenses mounted behind the protective lenses.

05.B.03 Personnel who are considered blind in one eye and are working in other than administrative functions shall wear safety spectacles with side shields while on the job.

05.B.04 Operations that require the use of, or exposure to, hot or molten substances (e.g., babbitting, soldering, pouring or casting of hot metals, handling of hot tar, oils, liquids, and molten substances) shall require eye protection, such as goggles, with safety lenses and screens for side protection, or face masks, shields, and helmets giving equal protection. Lens mountings shall be able to retain in position all parts of a cracked lens.

05.B.05 Operations that require handling of harmful materials (e.g., acids, caustics, hot liquids, or creosoted materials) and

operations where protection from gases, fumes, and liquids is necessary shall require the wearing of goggles with cups of soft pliable rubber and suitable faceshields, masks, or hoods that cover the head and neck, and other protective clothing appropriate to the hazards involved.

05.B.06 Operations where protection from radiant energy with moderate reduction of visible light is necessary, including welding, cutting, brazing, and soldering, shall require eye and face protection suitable to the type of work, providing protection from all angles of direct exposure, and with lenses of the appropriate shade. **>** ***See Table 5-2***

05.B.07 Glare-resistant glasses that comply with ANSI Z80.3 with an ultraviolet A-region (UVA) and ultraviolet B-region (UVB) 99% filtration shall be worn when conditions require protection against glare.

05.B.08 Tinted or automatically darkening lenses should not be worn when work tasks require the employee to pass from brightly to dimly lighted areas.

05.C HEARING PROTECTION AND NOISE CONTROL

05.C.01 Sound-pressure level limits.

a. DOD personnel shall be provided protection against the effects of hazardous noise exposure whenever sound-pressure levels exceed 85 decibels A-weighed (dB(A)) steady-state expressed as a time-weighted average (TWA) or 140 dB(A) impulse.

b. Non-DOD personnel shall be provided, as a minimum, protection against the effects of hazardous noise exposure whenever the sound-pressure level exceeds the limits and/or exposure times specified in Table 5-3.

TABLE 5-2

REQUIRED SHADES FOR FILTER LENSES AND GLASSES IN WELDING, CUTTING, BRAZING, AND SOLDERING

OPERATION	SHADE NUMBER
Soldering	2
Torch Brazing	3 or 4
Cutting (light) up to 1 in (2.5 cm)	3 or 4
Cutting (medium) 1 to 6 in (2.5 to 15.2 cm)	4 or 5
Cutting (heavy) 6 in (15.2 cm) or more	5 or 6
Gas welding (light) up to 1/8 in (0.3 cm)	4 or 5
Gas welding (medium) 1/8 to 1/2 in (0.3 to 1.2 cm)	5 or 6
Gas welding (heavy) 1/2 in (1.2 cm) or more	6 or 8
Atomic hydrogen welding	10 – 14
Inert-gas metal-arc welding (nonferrous) - 1/16 to 5/32 in (0.1 to 0.4 cm) electrodes	11
Inert-gas metal-arc welding (ferrous) - 1/16 to 5/32 in (0.1 to 0.4 cm) electrodes	12
Shielded metal-arc welding - 1/16 to 5/32 in (0.1 to 0.4 cm) electrodes	10
Shielded metal-arc welding - 3/16 to 1/4 in (0.4 to 0.6 cm) electrodes	12
Shielded metal-arc welding - 5/16 to 3/8 in (0.7 to 0.9 cm) electrodes	14
Carbon arc welding	14

05.C.02 When personnel are subjected to sound-pressure levels exceeding the limits specified in Table 5-3, feasible engineering or administrative controls shall be used. When such controls fail to reduce sound-pressure levels within the specified limit, PPE shall be selected, evaluated, provided, and used in accordance with the hearing conservation program. Hearing protection provided must be capable of attenuating worker noise exposure below an 8-hour TWA of 85 dB(A). In cases where hearing protection devices do not provide sufficient attenuation to reduce the worker noise exposure level below 85 dB(A), administrative control of exposure will be necessary. In determining the attenuation value of a given hearing protector, subtract 7 dB(A) from the Noise Reduction Rating (NRR). This corrected NRR can then be subtracted from the individual worker's noise environment in order to assess the adequacy of the protector, or see Appendix A to 29 CFR 1910.95.

TABLE 5-3

PERMISSIBLE NON-DoD NOISE EXPOSURES

Duration/day (hours)	Sound-pressure level dB(A) slow response
8	90
6	92
4	95
3	97
2	100
1-1/2	102
1	105
1/2	110
1/4	115

When the daily noise exposure is composed of two or more periods of noise exposure of different levels, the combined effects should be considered rather than the individual effect of each. Exposure to

different levels for various periods of time shall be computed according to the following formula:

$$C_n = T_1 / L_1 + T_2 / L_2 + ... + T_3 / L_3$$

Where :

C = combined noise exposure factor,

T = the total time of exposure at a specified sound-pressure level (in hours), and

L = the total time of exposure permitted at that level (in hours), from Table 5-3.

If C_n > = 1, hearing protection is required.

05.C.03 Whenever sound-pressure levels equal or exceed 85 dB(A) (measured as an 8-hour TWA), a continuing, effective hearing conservation program shall be administered in accordance with 29 CFR 1910.95: for DOD personnel the hearing conservation program shall conform to DODI 6055.12 and AR 40-5.

05.C.04 When sound-pressure levels exceed 115 dB(A) steady-state, personal ear protection equivalent to the combination of earplugs and earmuffs shall be required.

05.C.05 Sound-pressure level measurements shall be made by qualified personnel using calibrated instruments.

05.C.06 Ear insert devices to include disposable, preformed, or custom molded earplugs shall be fitted to the exposed individual by an individual trained in such fitting and able to recognize the difference between a good and a poor fit: plain cotton is not an acceptable protective device.

05.C.07 Noise hazard areas (areas in which sound-pressure levels exceed the limits specified in 05.C.01) shall be marked with caution

signs indicating both the presence of hazardous noise levels and the requirement for hearing protection.

05.D HEAD PROTECTION

05.D.01 All persons working in or visiting hard-hat areas shall be provided with and required to wear Type I or Type II, Class G (General - low voltage electrical protection) or Class E (Electrical – high voltage electrical protection) headgear. For emergency response operations and other activities with greater need for side impact protection, Type II head protection is recommended. ***>See Appendix B.***

a. Hard-hat areas are those areas with potential hazard of head injury: all construction areas are considered hard-hat areas. The identification and analysis of head hazards will be documented in an AHA, APP, or project safety and health plan, as appropriate.

b. Hard-hat areas shall be general areas (such as dredging, construction, alteration, demolition, quarry, or similar field activities) rather than specific portions of a building or project.

c. All points of entry to a hard-hat area shall have a sign warning of the requirement to wear hard hats.

05.D.02 All protective headgear shall meet the requirements of the current ANSI Z89.1.

a. No modification to the shell or suspension is allowed unless approved by the manufacturer.

b. Hard hats shall be worn with the bill facing forward.

c. Protective headgear worn near electric lines and equipment shall be Class E.

d. No ball caps, knit caps, or other headdress shall be worn under the hard hat that could interfere with the fit or stability of the hard hat unless approved by the manufacturer.

05.D.03 Protective headgear and components shall be visually inspected on a daily basis for signs of damage (dents, cracks, etc.) that might reduce the degree of safety originally provided. Headgear will periodically be inspected for ultraviolet degradation as evidenced by cracking or flaking of the helmet.

05.D.04 Drilling holes or in any way changing the integrity of the hard hat is prohibited.

05.D.05 Protective headgear worn by USACE employees shall (in addition to complying with the preceding specifications) be:

a. White in color and marked with a 1-in (2.5-cm) band of red reflective material placed along the base of the crown with a 5 in (12.7 cm) break in front. A red Corps of Engineers castle insignia, meeting specifications of Engineering Regulation (ER) 385-1-6, will be centered at the front of the hat with the base of the insignia approximately 3/4 in (1.9 cm) above the base of the crown. Personnel may place their name above the insignia and their organization title below the insignia: the rank of military personnel should precede their name. An American Flag insignia may be worn on the back of the hard hat.

b. Local use of the sides of hard hats for safety decals is authorized.

c. Alterations that will reduce the dielectric or impact strength will not be made.

d. Requests for variations in color and marking to accommodate occupational specialties should be submitted for consideration to HQUSACE Safety and Health Office.

e. Chin straps will be worn when wearers are subject to high wind conditions and/or working on elevated structures

05.E RESPIRATORY PROTECTION

05.E.01 General. Respirators applicable and suitable for the purpose intended shall be provided and worn by Government in-house and Contractor employees performing work activities to include those covered by OSHA's General Industry, Shipyard, and Construction standards when such equipment is necessary to protect the health of employees. Respirators, training, and medical evaluations shall be provided at no cost to the employee.

O5.E.02 Respiratory Hazard Assessment. A hazard assessment shall be conducted and documented in accordance with Section 06 to identify and evaluate respiratory hazards, such as harmful dusts, fogs, fumes, mists, gases, smokes, sprays, or vapors. This evaluation shall include a reasonable estimate of employee exposure and an identification of the contaminant's chemical state and physical form. The control of such hazards, as far as feasible, shall be by accepted engineering control (e.g., enclosure or confinement of the operation, general and local ventilation, and substitution of less toxic materials) and improved work practices. When effective engineering controls are not feasible, or while they are being instituted, appropriate respirators shall be provided by the employer and used by employees.

05.E.03 Written respiratory protection program. Where respirators are necessary to protect the health of the employee, establish and implement a written respiratory protection program with worksite-specific procedures in accordance with this section and OSHA's respiratory protection standard at 29 CFR 1910.134. Designate a competent person as program administrator, who is qualified by appropriate training or experience that is commensurate with the complexity of the program, to administer and oversee the respiratory protection program and conduct the required evaluations of program effectiveness. The program shall be updated as necessary to reflect those changes in workplace

conditions that affect respirator use. Include in the program the following provisions:

a. Procedures for selecting respirators for use in the workplace;

b. Medical evaluations of employees required to use respirators;

c. Fit testing procedures for tight-fitting respirators;

d. Procedures for proper use of respirators in routine and reasonably foreseeable emergency situations;

e. Procedures and schedules for cleaning, disinfecting, storing, inspecting, repairing, discarding, and otherwise maintaining respirators;

f. Procedures to ensure adequate air quality, quantity, and flow of breathing air for atmosphere-supplying respirators;

g. Training of employees in the respiratory hazards to which they are potentially exposed during routine and emergency situations;

h. Training of employees in the proper use of respirators, including putting on and removing them, any limitations on their use, and their maintenance; and

i. Procedures for regularly evaluating the effectiveness of the program.

05.E.04 Voluntary Use. Where respirator use is not required:

a. Respirators may be provided at the request of employees or employees may be permitted to use their own respirators, if it is determined that such respirator use will not in itself create a hazard. If it is determined that any voluntary respirator use is permissible, provide the respirator users with the information

contained in the OSHA respirator standard in Appendix D of 29 CFR 1910.134, and

b. Establish and implement those elements of the written respiratory protection program necessary to ensure that any employee using a respirator voluntarily is medically able to use that respirator, and that the respirator is cleaned, stored, and maintained so that its use does not present a health hazard to the user. Employees are not required to be included in the written respiratory protection program where it is determined the only use of respirators involves the voluntary use of filtering facepieces (dust masks).

05.E.05 Selection - General. Select and provide an appropriate respirator based on the respiratory hazard(s) to which the employee is exposed and workplace and user factors that affect respirator performance and reliability.

a. Select a NIOSH-certified respirator. The respirator shall be used in compliance with the conditions of its certification. Selection and use of commercially available respirators for protection against military chemical agents must be those approved for use in accordance with the DOD and Army requirements to include AR 11-34.

b. Identify and evaluate the respiratory hazard(s) in the workplace in accordance with 05.E.02. Where the actual or reasonable estimate of employee exposure cannot be determined, consider the atmosphere to be immediately dangerous to life and health (IDLH).

c. Select respirators from a sufficient number of respirator models and sizes so that the respirator is acceptable to, and correctly fits, the user.

05.E.06 Selection - Respirators for IDLH atmospheres. Provide the following respirators for employee use in IDLH atmospheres:

a. A full-facepiece, pressure-demand, self-contained breathing apparatus (SCBA) certified by NIOSH for a minimum service life of 30 minutes; or

b. A combination full-facepiece, pressure-demand, supplied-air respirator (SAR) with auxiliary self-contained air supply.

c. Respirators provided only for escape from IDLH atmospheres shall be NIOSH-certified for escape from the atmosphere in which they will be used.

d. All oxygen-deficient atmospheres shall be considered IDLH. Exception: If it can be demonstrated that, under all foreseeable conditions, the oxygen concentration can be maintained within the ranges specified in Table II of 29 CFR 1910.134 for the altitudes set out in the table, then any atmosphere-supplying respirator may be used.

05.E.07 Selection - Respirators for atmospheres that are not IDLH. Provide a respirator that is adequate to protect the health of the employee and ensure compliance with all other OSHA requirements under routine and reasonably foreseeable emergency situations.

a. Use assigned protection factors (APFs) described in OSHA specific standards, most current edition of the NIOSH Respirator Decision Logic, ANSI Z88.2, or other nationally recognized sources.

b. Provide a respirator appropriate for the chemical state and physical form of the contaminant.

c. For protection against gases and vapors, provide:

(1) An atmosphere-supplying respirator, or

(2) An air-purifying respirator, provided that the respirator is equipped with an end-of-service-life indicator (ESLI) certified by NIOSH for the contaminant; or if there is no ESLI

appropriate for conditions in the workplace, implement a change schedule for canisters and cartridges that is based on objective information or data that will ensure that canisters and cartridges are changed before the end of their service life. Describe in the respirator program the information and data relied upon and the basis for the canister and cartridge change schedule and the basis for reliance on the data.

d. For protection against particulates, provide:

(1) An atmosphere-supplying respirator, or

(2) An air-purifying respirator equipped with a filter certified for particulates by NIOSH.

05.E.08 Medical evaluation. Provide a medical evaluation to determine the employee's ability to use a respirator, before the employee is fit tested or required to use the respirator in the workplace. Exception: A medical evaluation is not required for employees whose only respirator use would be the use of a NIOSH certified Emergency Life Support Apparatus (ELSA) escape only respirator that provides less than 30 minutes of breathing air and is used to escape from a building/structure in the event of an emergency. An employee's medical evaluations may be discontinued when the employee is no longer required to use a respirator. Implement the following medical evaluation procedures:

a. Identify a physician or other licensed healthcare professional (PLHCP) to perform medical evaluations using a medical questionnaire or an initial medical examination that obtains the same information as the medical questionnaire. The medical evaluation shall obtain the information requested by the questionnaire in 29 CFR 1910.134, Appendix C, Part A, Sections 1 and 2.

b. Ensure that a follow-up medical examination is provided for an employee who gives a positive response to any question among questions 1 through 8 in 29 CFR 1910.134, Appendix C,

Part A, Section 2, or whose initial medical examination demonstrates the need for a follow-up medical examination. The follow-up medical examination shall include any medical tests, consultations, or diagnostic procedures that the PLHCP deems necessary to make a final determination.

c. The medical questionnaire and examinations shall be administered confidentially during the employee's normal working hours or at a time and place convenient to the employee. The medical questionnaire shall be administered in a manner that ensures that the employee understands its content.

d. Provide the employee with an opportunity to discuss the questionnaire and examination results with the PLHCP.

e. The following information must be provided to the PLHCP before the PLHCP makes a recommendation concerning an employee's ability to use a respirator:

(1) The type and weight of the respirator to be used by the employee;

(2) The duration and frequency of respirator use (including use for rescue and escape);

(3) The expected physical work effort;

(4) Additional protective clothing and equipment to be worn; and

(5) Temperature and humidity extremes that may be encountered.

f. Any supplemental information provided previously to the PLHCP regarding an employee need not be provided for a subsequent medical evaluation if the information and the PLHCP remain the same.

g. Provide the PLHCP with a copy of the written respiratory protection program and a copy of the OSHA respiratory protection standard, 29 CFR 1910.134.

h. When a PLHCP is replaced, ensure that the new PLHCP obtains this information, either by providing the documents directly to the PLHCP or having the documents transferred from the former PLHCP to the new PLHCP. Employees do not have to be medically reevaluated solely because a new PLHCP has been selected.

i. Medical determination. In determining the employee's ability to use a respirator, obtain a written recommendation regarding the employee's ability to use the respirator from the PLHCP. The recommendation shall provide only the following information:

(1) Any limitations on respirator use related to the medical condition of the employee, or relating to the workplace conditions in which the respirator will be used, including whether or not the employee is medically able to use the respirator;

(2) The need, if any, for follow-up medical evaluations; and

(3) A statement that the PLHCP has provided the employee with a copy of the PLHCP's written recommendation.

j. If the respirator is a negative-pressure respirator and the PLHCP finds a medical condition that may place the employee's health at increased risk if the respirator is used, provide a powered-air purifying respirator (PAPR). If a subsequent medical evaluation finds that the employee is medically able to use a negative-pressure respirator, then there is no continuing requirement to provide the employee a PAPR.

k. At a minimum, provide additional medical evaluations that comply with the requirements of the OSHA respirator standard at 29 CFR 1910.134 if:

(1) An employee reports medical signs or symptoms that are related to ability to use a respirator;

(2) A PLHCP, supervisor, or the respirator program administrator informs the employer that an employee needs to be reevaluated;

(3) Information from the respiratory protection program, including observations made during fit testing and program evaluation, indicates a need for employee reevaluation; or

(4) A change occurs in workplace conditions (e.g., physical work effort, protective clothing, temperature) that may result in a substantial increase in the physiological burden placed on an employee.

05.E.09 Fit testing.

a. Ensure that employees using a tight-fitting facepiece respirator pass an appropriate qualitative fit test (QLFT) or quantitative fit test (QNFT) required by this paragraph.

b. Ensure that an employee using a tight-fitting facepiece respirator is fit tested prior to initial use of the respirator, whenever a different respirator facepiece (size, style, model or make) is used, and at least annually thereafter.

c. Conduct an additional fit test whenever the employee reports, or the employer, PLHCP, supervisor, or program administrator makes visual observations of, changes in the employee's physical condition that could affect respirator fit. Such conditions include, but are not limited to, facial scarring, dental changes, cosmetic surgery, or an obvious change in body weight.

d. If after passing a QLFT or QNFT, the employee subsequently notifies the employer, program administrator, supervisor, or PLHCP that the fit of the respirator is unacceptable, the employee shall be given a reasonable

opportunity to select a different respirator facepiece and to be retested.

e. The fit test shall be administered using an OSHA-accepted QLFT or QNFT protocol. The OSHA-accepted QLFT and QNFT protocols and procedures are contained in the OSHA respirator standard at 29 CFR 1910.134, Appendix A.

f. QLFT may only be used to fit test negative-pressure, air-purifying respirators that must achieve a fit factor of 100 or less.

g. If the fit factor, as determined through an OSHA-accepted QNFT protocol, is equal to or greater than 100 for tight-fitting half facepieces, or equal to or greater than 500 for tight-fitting full facepieces, the QNFT has been passed with that respirator.

h. Fit testing of tight-fitting, atmosphere-supplying respirators and tight-fitting, PAPRs shall be accomplished by performing quantitative or qualitative fit testing in the negative-pressure mode, regardless of the mode of operation (negative or positive pressure) that is used for respiratory protection.

(1) QLFT of these respirators shall be accomplished by temporarily converting the respirator user's actual facepiece into a negative-pressure respirator with appropriate filters, or by using an identical negative-pressure, air-purifying respirator facepiece with the same sealing surfaces as a surrogate for the atmosphere-supplying or PAPR facepiece.

(2) QNFT of these respirators shall be accomplished by modifying the facepiece to allow sampling inside the facepiece in the breathing zone of the user, midway between the nose and mouth. This requirement shall be accomplished by installing a permanent sampling probe onto a surrogate facepiece, or by using a sampling adapter designed to temporarily provide a means of sampling air from inside the facepiece.

(3) Any modifications to the respirator facepiece for fit testing shall be completely removed, and the facepiece shall be restored to NIOSH-approved configuration, before that facepiece can be used in the workplace.

05.E.10 Use of respirators. Establish and implement procedures for the proper use of respirators. These requirements include prohibiting conditions that may result in facepiece seal leakage, preventing employees from removing respirators in hazardous environments, taking actions to ensure continued effective respirator operation throughout the work shift, and establishing procedures for the use of respirators in IDLH atmospheres or in interior structural firefighting situations.

a. Facepiece seal protection. Do not permit respirators with tight-fitting facepieces to be worn by employees who have:

(1) Facial hair that comes between the sealing surface of the facepiece and the face or that interferes with valve function; or

(2) Any condition that interferes with the face-to-facepiece seal or valve function.

(3) If an employee wears corrective glasses or goggles or other PPE, ensure that such equipment is worn in a manner that does not interfere with the seal of the facepiece to the face of the user.

(4) For all tight-fitting respirators, ensure that employees perform a user seal check each time they put on the respirator using the procedures in 29 CFR 1910.134, Appendix B-1, or procedures recommended by the respirator manufacturer that can be demonstrated to be as effective as those in Appendix B-1.

b. Continuing respirator effectiveness. Appropriate surveillance shall be maintained of work area conditions and degree of employee exposure or stress. When there is a change in work

area conditions or degree of employee exposure or stress that may affect respirator effectiveness, reevaluate the continued effectiveness of the respirator. Ensure that employees leave the respirator use area:

(1) To wash their faces and respirator facepieces as necessary to prevent eye or skin irritation associated with respirator use; or

(2) If they detect vapor or gas breakthrough, changes in breathing resistance, or leakage of the facepiece. (If the employee detects vapor or gas breakthrough, changes in breathing resistance, or leakage of the facepiece, replace or repair the respirator before allowing the employee to return to the work area); or

(3) To replace the respirator or the filter, cartridge, or canister elements.

c. Procedures for IDLH atmospheres. For all IDLH atmospheres, ensure that:

(1) One employee or, when needed, more than one employee is located outside the IDLH atmosphere;

(2) Visual, voice, or signal line communication is maintained between the employee(s) in the IDLH atmosphere and the employee(s) located outside the IDLH atmosphere;

(3) The employee(s) located outside the IDLH atmosphere are trained and equipped to provide effective emergency rescue;

(4) A designated competent person responsible for work activities in the IDLH atmosphere is notified before the employee(s) located outside the IDLH atmosphere enter the IDLH atmosphere to provide emergency rescue;

(5) The designated competent person, once notified, provides necessary assistance appropriate to the situation;

(6) Employee(s) located outside the IDLH atmospheres are equipped with pressure-demand or other positive-pressure SCBAs, or a pressure-demand or other positive-pressure, supplied-air respirator with auxiliary SCBA; and either appropriate retrieval equipment for removing the employee(s) who enter(s) these hazardous atmospheres where retrieval equipment would contribute to the rescue of the employee(s) and would not increase the overall risk resulting from entry; or equivalent means for rescue where retrieval equipment is not required.

d. Procedures for interior structural firefighting. In addition to the requirements set forth under 5.E.10.c, in interior structural fires, ensure that:

(1) At least two employees enter the IDLH atmosphere and remain in visual or voice contact with one another at all times;

(2) At least two employees are located outside the IDLH atmosphere; and

(3) All employees engaged in interior structural firefighting use SCBAs.

(4) One of the two individuals located outside the IDLH atmosphere may be assigned to an additional role, such as incident commander in charge of the emergency or safety officer, so long as this individual is able to perform assistance or rescue activities without jeopardizing the safety or health of any firefighter working at the incident.

(5) Firefighters may perform emergency rescue activities before an entire team has assembled.

5.E.11 Maintenance and care of respirators. Provide for the cleaning and disinfecting, storage, inspection, and repair of respirators used by employees.

a. Cleaning and disinfecting. Provide each respirator user with a respirator that is clean, sanitary, and in good working order. Ensure that respirators are cleaned and disinfected using the procedures in 29 CFR 1910.134, Appendix B-2, or procedures recommended by the respirator manufacturer, provided that such procedures are of equivalent effectiveness. The respirators shall be cleaned and disinfected at the following intervals:

(1) Respirators issued for the exclusive use of an employee shall be cleaned and disinfected as often as necessary to be maintained in a sanitary condition;

(2) Respirators issued to more than one employee shall be cleaned and disinfected before being worn by different individuals;

(3) Respirators maintained for emergency use shall be cleaned and disinfected after each use; and

(4) Respirators used in fit testing and training shall be cleaned and disinfected after each use.

b. Storage. Ensure that respirators are stored as follows:

(1) All respirators shall be stored to protect them from damage, contamination, dust, sunlight, extreme temperatures, excessive moisture, and damaging chemicals; and they shall be packed or stored to prevent deformation of the facepiece and exhalation valve.

(2) In addition, emergency respirators shall be:

(a) Kept accessible to the work area;

(b) Stored in compartments or in covers that are clearly marked as containing emergency respirators; and

(c) Stored in accordance with any applicable manufacturer's instructions.

c. Inspection. Ensure that respirators are inspected as follows:

(1) All respirators used in routine situations shall be inspected before each use and during cleaning;

(2) All respirators maintained for use in emergency situations shall be inspected at least monthly and in accordance with the manufacturer's recommendations, and shall be checked for proper function before and after each use; and

(3) Emergency escape-only respirators shall be inspected before being carried into the workplace for use.

(4) Ensure that respirator inspections include the following:

(a) A check of respirator function, tightness of connections, and the condition of the various parts including, but not limited to, the facepiece; head straps; valves; connecting tube; and cartridges, canisters, or filters; and

(b) A check of elastomeric parts for pliability and signs of deterioration.

(c) In addition, SCBA shall be inspected monthly. Air and oxygen cylinders shall be maintained in a fully charged state and shall be recharged when the pressure falls to 90% of the manufacturer's recommended pressure level. Determine that the regulator and warning devices function properly.

(5) For respirators maintained for emergency use:

(a) Certify the respirator by documenting the date the inspection was performed, the name (or signature) of the person who made the inspection, the findings, required remedial action, and a serial number or other means of identifying the inspected respirator; and

(b) Provide this information on a tag or label that is attached to the storage compartment for the respirator, is kept with the respirator, or is included in inspection reports stored as paper or electronic files. This information shall be maintained until replaced following a subsequent certification.

d. Repairs. The employer shall ensure that respirators that fail an inspection or are otherwise found to be defective are removed from service and are discarded or repaired or adjusted in accordance with the following procedures:

(1) Repairs or adjustments to respirators are to be made only by persons appropriately trained to perform such operations and only the respirator manufacturer's NIOSH-approved parts designed for the respirator shall be used;

(2) Repairs shall be made according to the manufacturer's recommendations and specifications for the type and extent of repairs to be performed; and

(3) Reducing and admission valves, regulators, and alarms shall be adjusted or repaired only by the manufacturer or a technician trained by the manufacturer.

05.E.12 Breathing air quality and use. Provide employees using atmosphere-supplying respirators (SAR and SCBA) with breathing gases of high purity.

a. Ensure that compressed air, compressed oxygen, liquid air, and liquid oxygen used for respiration are in accordance with the following specifications:

(1) Compressed and liquid oxygen shall meet the United States Pharmacopoeia requirements for medical or breathing oxygen; and

(2) Compressed breathing air shall meet at least the requirements for Grade D breathing air described in Compressed Gas Association (CGA) G-7.1, to include:

(a) Oxygen content (v/v) of 19.5-23.5%;

(b) Hydrocarbon (condensed) content of 5 milligrams per cubic meter (mg/m^3) of air or less;

(c) Carbon monoxide (CO) content of 10 parts per million (ppm) or less;

(d) Carbon dioxide (CO_2) content of 1,000 ppm or less; and

(e) Lack of noticeable odor.

(3) OSHA does not require the use of a specific instrument to verify the compliance of air quality requirements prescribed in CGA G-7.1. Any measuring instrument that has an accuracy of + or - 25% at a 95% confidence limit is acceptable.

b. The employer shall ensure that compressed oxygen is not used in atmosphere-supplying respirators that have previously used compressed air.

c. The employer shall ensure that oxygen concentrations greater than 23.5% are used only in equipment designed for oxygen service or distribution.

d. The employer shall ensure that cylinders used to supply breathing air to respirators meet the following requirements:

(1) Cylinders are tested and maintained as prescribed in the Shipping Container Specification Regulations of the Department of Transportation (DOT) (49 CFR 173 and 49 CFR 178);

(2) Cylinders of purchased breathing air have a certificate of analysis from the supplier that the breathing air meets the requirements for Grade D breathing air; and

(3) The moisture content in the cylinder does not exceed a dew point of -50 degrees Fahrenheit (°F) (-45.6 degrees Celsius (°C)) at 1 atmosphere pressure.

e. Ensure that compressors used to supply breathing air to respirators are constructed and situated so as to:

(1) Prevent entry of contaminated air into the air-supply system;

(2) Minimize moisture content so that the dew point at 1 atmosphere pressure is 10 °F (5.56 °C) below the ambient temperature;

(3) Have suitable in-line, air-purifying, sorbent beds and filters to further ensure breathing air quality. Sorbent beds and filters shall be maintained and replaced or refurbished periodically following the manufacturer's instructions. Since the breathing air system and the frequency of use vary among different users, there is no single testing frequency of air quality that will be satisfactory for all users. When a new breathing air system is installed, the air quality shall be tested more frequently to establish a baseline for changing the air purification agents. Once the baseline is established, the testing frequency can be adjusted according to the service life of the air purification agents.

(4) Have a tag containing the most recent change date and the signature of the person authorized by the employer to perform the change. The tag shall be maintained at the compressor.

f. For compressors that are not oil-lubricated, ensure that CO levels in the breathing air do not exceed 10 ppm. CO levels must be measured each time the compressor is moved to a new location. Portable breathing air- type compressors are not required to be tested for Grade D breathing air.

g. For oil-lubricated compressors, use a high-temperature or CO alarm, or both, to monitor CO levels. An "alarm" is an audible device that is installed on the oil-lubricated air compressor. If only high-temperature alarms are used, the air supply shall be monitored at intervals sufficient to prevent CO in the breathing air from exceeding 10 ppm.

h. Ensure that breathing air couplings are incompatible with outlets for nonrespirable worksite air or other gas systems. No asphyxiating substance shall be introduced into breathing air lines.

i. Use breathing gas containers marked in accordance with the NIOSH respirator certification standard, 42 CFR 84.

05.E.13 Identification of filters, cartridges, and canisters. Ensure that all filters, cartridges, and canisters used in the workplace are labeled and color coded with the NIOSH approval label and that the label is not removed and remains legible.

05.E.14 Training and information. Provide effective training to employees who are required to use respirators. The training must be comprehensive, understandable, and recur annually, and more often if necessary.

a. Ensure that each employee can demonstrate knowledge of at least the following:

(1) Why the respirator is necessary and how improper fit, usage, or maintenance can compromise the protective effect of the respirator;

(2) What the limitations and capabilities of the respirator are;

(3) How to use the respirator effectively in emergency situations, including situations in which the respirator malfunctions;

(4) How to inspect, put on and remove, use, and check the seals of the respirator;

(5) What the procedures are for maintenance and storage of the respirator;

(6) How to recognize medical signs and symptoms that may limit or prevent the effective use of respirators; and

(7) The general requirements of the OSHA respirator standard at 29 CFR 1910.134.

b. The training shall be conducted in a manner that is understandable to the employee.

c. Provide the training prior to requiring the employee to use a respirator in the workplace.

d. When it can be demonstrated by written documentation that a new employee has received training within the last 12 months that addresses the elements specified above, that employee is not required to repeat such training provided that the employee can demonstrate knowledge of those element(s). When training is not repeated, it must be provided no later than 12 months from the date of the previous training.

e. Retraining shall be administered annually, and when the following situations occur:

(1) Changes in the workplace or the type of respirator render previous training obsolete;

(2) Inadequacies in the employee's knowledge or use of the respirator indicate that the employee has not retained the requisite understanding or skill; or

(3) Any other situation arises in which retraining appears necessary to ensure safe respirator use.

f. The basic advisory information on respirators, as presented in the OSHA respirator standard at 29 CFR 1910.134, Appendix D, shall be provided in any written or oral format to employees who wear respirators when such use is not required by this section or by the employer.

05.E.15 Program evaluation. Conduct evaluations of the workplace to ensure that the written respiratory protection program is being properly implemented, and consult employees to ensure that they are using the respirators properly.

a. Conduct evaluations of the workplace as necessary to ensure that the provisions of the current written program are being effectively implemented and that it continues to be effective.

b. Regularly consult with employees required to use respirators to assess the employees' views on program effectiveness and to identify any problems. Any problems that are identified during this assessment shall be corrected. Factors to be assessed include, but are not limited to:

(1) Respirator fit (including the ability to use the respirator without interfering with effective workplace performance);

(2) Appropriate respirator selection for the hazards to which the employee is exposed;

(3) Proper respirator use under the workplace conditions the employee encounters; and

(4) Proper respirator maintenance.

05.E.16 Recordkeeping. Establish and retain written information regarding medical evaluations, fit testing, and the respirator program. This information will facilitate employee involvement in the respirator program, assist in auditing the adequacy of the program, and provide a record for compliance determinations by OSHA.

a. Medical evaluation. Records of medical evaluations must be retained and made available in accordance with 29 CFR 1910.1020.

b. Fit testing. Retain fit test records for respirator users until the next fit test is administered. Establish a record of the QLFT and QNFT administered to an employee including:

(1) The name or identification of the employee tested;

(2) Type of fit test performed;

(3) Specific make, model, style, and size of respirator tested;

(4) Date of test; and

(5) The pass/fail results for QLFTs or the fit factor and strip chart recording or other recording of the test results for QNFTs.

c. Retain a written copy of the current respirator program.

d. Written materials required by 05.E.15 shall be made available upon request to affected employees.

05.F BODY BELTS, HARNESSES, LANYARDS, AND LIFELINES - SELECTION OF COMPONENTS

05.F.01 Personal fall arrest, fall restraint and positioning device systems. ***Warning: Personal fall arrest systems are generally only certified up to a combined weight of 310 pounds (lb) (140.6 kilograms (kg)) including the weight of the person and equipment. Workers shall not be permitted to exceed this limit unless permitted in writing by the manufacturer. > All fall arrest systems shall meet the requirements contained in ANSI/American Society of Safety Engineers (ASSE) Z359.1.***

a. Personal fall arrest systems require the use of a full-body harness: body belts and chest waist harnesses are not acceptable as part of personal fall arrest systems.

b. The use of a body belt is permitted in positioning and restraint systems.

05.F.02 Fall Arrest Systems - General.

a. Connectors shall be drop forged, pressed or formed steel, or made of equivalent materials; shall have corrosion resistant finish; and all surfaces and edges shall be smooth to prevent damage to interfacing parts of the system.

b. D-rings, locking-type snaphooks, and other connectors shall have a minimum tensile strength of 5,000 lb (2,267.9 kg); D-rings and snaphooks shall be proof-tested to a minimum tensile load of 3,600 lb (1632.9 kg) without cracking, breaking, or taking permanent deformation. ***> Proof testing is typically conducted by the manufacturer, and a specification of proof testing supplied with the manufactured good.***

c. Personal fall arrest systems shall decelerate and bring the employee to a complete stop within 42 in (106.6 cm), excluding lifeline elongation, after free fall distance.

d. Personal fall arrest systems, when stopping or preventing a fall, shall not produce an arresting force on an employee of more than 10 times the employee's weight or 1,800 lb (816.4 kg), whichever is lower.

e. Positioning device systems shall prevent the user from free falling no more than 2 ft (0.6 m).

f. Fall restraint systems shall prevent the user from reaching an area where a free fall could occur.

g. Body harnesses shall consist of straps that are secured about a body in a manner that distributes the arresting forces over at least the thighs, waist, chest, shoulders, and pelvis, with provision for attaching a lanyard, lifeline, or deceleration device.

h. Snaphooks and carabiners shall be of the self-locking type.

05.F.03 Lifelines and lanyards.

a. Lanyards and vertical lifelines shall have a minimum tensile strength of 5,000 lbs (2,267.9 kg).

b. Horizontal lifelines shall be designed, installed, and used, under the supervision of a qualified person, as part of a complete personal fall arrest system, which maintains a factor of safety of at least two.

c. Self-retracting lifelines and lanyards that automatically limit free fall distance to 2 ft (0.6 m) or less shall be capable of sustaining a minimum tensile load of 3,000 lbs (1,360.7 kg) applied to the device with the lifeline or lanyard in the fully extended position. Self-retracting lifelines and lanyards that do not limit free fall distance to 2 ft (0.6 m) or less, rip stitch lanyards, and tearing and deforming lanyards shall be capable of sustaining a minimum tensile load of 5,000 lb (2,267.9 kg) applied to the device with the lifeline or lanyard in the fully extended position.

d. Ropes and straps (webbing) used in lanyards, lifelines, and strength components of body belts and body harnesses shall be made from synthetic fibers.

e. Harness lanyards shall not be looped back over or through a large object and then attached back to themselves unless permitted by the manufacturer.

05.F.04 Lineman's equipment.

a. All fabric for safety straps shall be capable of withstanding an alternating current dielectric test of not less than 25,000 volts per foot "dry" for 3 minutes, without visible deterioration.

b. All fabric and leather used shall be capable of being tested for leakage current and not exceed 1 milliampere when a potential of 3,000 volts is applied to the electrodes 12 in (30.4 cm) apart.

c. Direct current testing may be permitted in lieu of alternating current testing.

05.G ELECTRICAL PROTECTIVE EQUIPMENT

05.G.01 Persons working on electrical distribution systems shall be provided with the appropriate electrical protective equipment, which shall be inspected, tested, and maintained in safe condition in accordance with the standards referenced in Table 5-4.

05.G.02 Employees may use rubber gloves, sleeves, blankets, covers, and line hose only when required by special conditions for work on energized facilities. Rubber goods provided to protect employees who work on energized facilities must meet ASTM specifications. Electrical workers' rubber insulating protective equipment shall be visually inspected for damage and defects prior to each use.

TABLE 5-4

STANDARDS FOR ELECTRICAL PROTECTIVE EQUIPMENT

SUBJECT	NUMBER AND TITLE
Head Protection	ANSI Z89.1, *Requirements for Protective Headwear for Industrial Workers*
Eye and face protection	ANSI/ASSE Z87.1, *Practice for Occupational and Educational Eye and Face Protection*
Gloves	ASTM D120, *Standard Specification for Rubber Insulating Gloves*
Sleeves	ASTM D1051, *Standard Specification for Rubber Insulating Sleeves*
Gloves and sleeves	ASTM F496, *Standard Specification for In-Service Care of Insulating Gloves and Sleeves*
Leather protectors	ASTM F696, *Standard Specification for Leather Protectors for Rubber Insulating Gloves and Mittens*
Footwear	ASTM F1117, *Standard Specification for Dielectric Overshoe Footwear*
	ANSI Z41, *Standard for Personnel Protection - Protective Footwear*
Visual inspection	ASTM F1236, *Standard Guide for Visual Inspection of Electrical Protective Rubber Products*
Apparel	ASTM F1506, *Standard Performance Specification for Flame Resistant Textile Materials for Wearing Apparel for Use by Electrical Workers When Exposed to Momentary Electric Arc and Related Thermal Hazards*

05.G.03 Electric flash protection shall be provided for any person who enters the flash protection zone (***See 11.A.06***). They must wear flame-resistant clothing and PPE, based on the incident exposure associated with the specific task. Refer to NFPA 70E for specific Hazard Risk Classifications and clothing/equipment requirements. ***> Synthetic clothing such as acetate, nylon, polyester, rayon, either alone or in blends with cotton, are prohibited in the flash protection zone.***

a. Employees must wear protective eye equipment whenever there is a danger from electric arcs, flashes, flying objects, or electrical explosion.

b. Employees must wear flame-resistant clothing whenever they may be exposed to an electric flash. If used, flash suits and their closure design must permit easy and rapid removal. The entire flash suit, including the window, must have energy-absorbing characteristics suitable for arc-flash-exposure. Use clothing and equipment to maximize worker protection. Clothing and equipment required by the degree of electrical hazard exposure can be worn alone or be integrated with normal apparel. Protective clothing and equipment must cover associated parts of the body and all normal apparel that is not flash-flame resistant, while allowing movement and visibility. ***> Do not wear synthetic materials that can melt next to skin.***

c. Employees must wear rubber-insulating gloves where there is a danger of hand or arm injury from electric shock or arc-flash burns due to contact with energized parts. Gloves made from layers of flame-resistant material provide the highest level of protection. Leather glove protectors should be worn over voltage-rated rubber gloves.

d. Dielectric overshoes are required where electrically insulated footwear is used for protection against step and touch potential.

e. Table 3-3.9.1 of Part II of NFPA 70E should be used to determine the Hazard/Risk category associated with each task. Once the Hazard/Risk category has been determined, refer to

Table 3-3.9.1 of Part II of NFPA 70E to determine the requirements for protective clothing or other PPE.

05.G.04 An air test shall be performed on electrical workers' rubber insulating gloves before each use.

05.G.05 Protective equipment of material other than rubber shall provide equal or better electrical and mechanical protection.

05.G.06 Only live-line tool poles having a manufacturer's certification to withstand at least the following tests shall be used:

a. 100,000 volts per foot of length for 5 minutes when the tool is made of fiberglass, or

b. 75,000 volts per foot of length for 3 minutes when the tool is made of wood, or

c. Other equivalent tests.

05.G.07 Only tools and equipment intended for live-line bare hand work shall be used on transmission lines. The tools shall be kept dry and clean and shall be visually inspected before use each day.

05.G.08 See Section 05.F for requirements on lineman's personal fall protection equipment.

05.H PERSONAL FLOATATION DEVICES

05.H.01 Type III, Type V work vests, or better U.S. Coast Guard (USCG)-approved International Orange personal floatation device (PFD) equipped with a USCG-approved automatically activated light (lights on Type III and Type V PFDs are not required on projects performed exclusively during daylight hours) and retroreflective tape shall be provided to and properly worn (zipped, tied, latched, etc., in closed fashion) by all persons in the following circumstances (inflatable PFDs will not be worn by workers on USACE sites): **>** ***See Figure 5-1.***

FIGURE 5-1

PERSONAL FLOATATION DEVICES

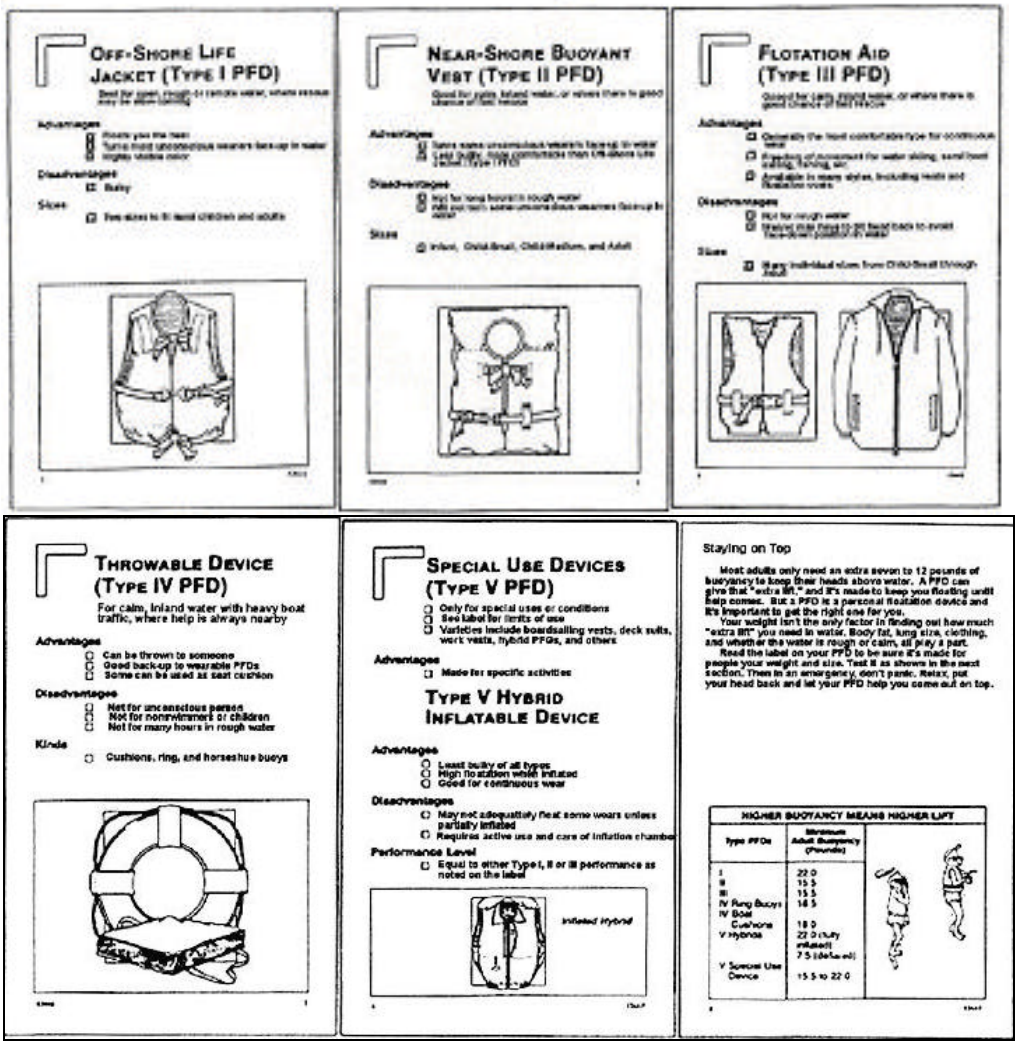

a. On floating pipelines, pontoons, rafts, or stages;

b. On structures or equipment (including heavy operating equipment that is not secured to the structure) extending over or next to water except where guardrails, personal fall protection system, or safety nets are provided for employees;

c. Working alone at night where there are drowning hazards, regardless of other safeguards provided;

d. In skiffs, small boats, or launches, unless in an enclosed cabin or cockpit; or

e. Wherever there is a drowning hazard.

05.H.02 Before and after each use, the PFD shall be inspected for defects that would alter its strength or buoyancy: defective devices or devices with less than 13-lb (5.8-kg) buoyancy shall be removed from service.

05.H.03 Throwable devices (Type IV PFD).

a. On USCG-inspected vessels, ring buoys are required to have automatic floating electric water lights as required by 46 CFR 160.

b. On all other floating plant and shore installations, lights on life rings are required only in locations where adequate general lighting (e.g., floodlights, light stanchions) is not provided. For these plants and installations, at least one life ring, and every third one thereafter, shall have an automatic floating electric water light attached.

c. All PFDs shall be equipped with retroreflective tape in accordance with USCG requirements.

d. Life rings (rope attachment not required) and ring buoys (rope attachment required) shall conform to the requirements of

46 CFR 160 (USCG approved) and should have at least 70 ft (21.3 m) of 3/8-in (0.9-cm) solid braid polypropylene, or equivalent, attached. Throw bags may be used in addition to life rings or ring buoys. Life rings or ring buoys shall be readily available and shall be provided at the following places:

(1) At least one on each safety skiff;

(2) At least one on all motor boats up to 40 ft (12.1 m) in length and at least two for motor boats 40 ft (12.1 m) in length or longer;

(3) At least two on any other piece or group of floating plant up to 100 ft (30.4 m) in length and one additional for each increase in length of 100 ft (30.4 m) or fraction thereof; and

(4) At least one at intervals of not more than 200 ft (60.9 m) on pipelines, walkways, wharves, piers, bulkheads, lock walls, scaffolds, platforms, and similar structures extending over or immediately next to water, unless the fall distance to the water is more than 45 ft (13.7 m), in which case a life ring shall be used. (The length of line for life rings at these locations shall be evaluated, but the length may not be less than 70 ft (21.3 m).)

05.H.04 At navigation locks, an analysis of the benefits versus the hazards of using floating safety blocks (blocks that may be quickly pushed into the water to protect individuals who have fallen in the water from being crushed by vessels) shall be made.

a. This analysis shall be documented as an AHA.

b. If the use of blocks is found acceptable, consideration shall be given to the size and placement of the blocks, the appropriate means of securing and signing the blocks, etc. When the use of blocks is found unacceptable, alternative safety measures shall be developed.

05.I LIFESAVING AND SAFETY SKIFFS

05.I.01 At least one skiff shall be immediately available at locations where employees work over or immediately next to water.

05.I.02 Personnel trained in launching and operating the skiff shall be readily available during working hours. Lifesaving personnel shall perform a lifesaving drill, including the launching and recovery of the skiff, before the initiation of work at the site and periodically thereafter as specified by the GDA (but at least monthly or whenever new personnel are involved).

05.I.03 Skiffs shall be kept afloat or ready for instant launching.

05.I.04 Required equipment must be onboard and meet or exceed USCG requirements and the requirements of Section 19 of this manual. Skiffs shall be equipped as follows:

a. Four oars (two if the skiff is motor powered);

b. Oarlocks attached to gunwales or the oars;

c. One ball-pointed boat hook;

d. One ring buoy with 70 ft (21.3 m) of 3/8-in (0.9-cm) solid braid polypropylene, or equivalent, line attached; and

e. PFDs in number equaling the skiff rating for the maximum number of personnel allowed on board.

05.I.05 In locations where waters are rough or swift, or where manually-operated boats are not practical, a power boat suitable for the waters shall be provided and equipped for lifesaving.

05.I.06 Skiffs and power boats shall have flotation tanks or buoyant material capable of floating the boat and its equipment and the crew.

05.I.07 On vessels (e.g., skiffs) without permanently mounted navigation lights, portable battery-operated navigation lights will be available and used for night operations.

SECTION 6

HAZARDOUS SUBSTANCES, AGENTS, AND ENVIRONMENTS

06.A GENERAL

06.A.01 Exposure standards.

a. Exposure, through inhalation, ingestion, skin absorption, or physical contact, to any chemical, biological, or physical agent in excess of the acceptable limits specified in the most recently published American Conference of Governmental Industrial Hygienist (ACGIH), "*Threshold Limit Values and Biological Exposure Indices,*" or by OSHA, whichever is more stringent, shall be prohibited.

b. In case of conflicts between ACGIH and other standards or regulations referenced in this manual, the more stringent shall prevail.

c. The employer shall comply with all applicable standards and regulations to reduce contaminant concentration levels as low as is reasonably achievable (ALARA).

06.A.02 Hazard evaluation.

a. All operations, materials, and equipment shall be evaluated to determine the presence of hazardous environments or if hazardous or toxic agents could be released into the work environment.

b. AHA and/or PHA shall be used for the evaluation. The analyses shall identify all substances, agents, and environments that present a hazard and recommend hazard control measures. Engineering and administrative controls shall be used to control hazards; in cases where engineering or administrative controls are not feasible, PPE may be used.

c. The analyses shall identify: that it serves as certification of hazard assessment; the workplace and activity evaluated; the name of the person certifying that the evaluation has been performed; and the date of the evaluation.

d. Operations, materials, and equipment involving potential exposure to hazardous substances, agents, or environments shall be evaluated by a qualified industrial hygienist, or other competent person, to formulate a hazard control program. This program must be accepted by the GDA before the start of operations. ***> This evaluation shall be performed at least annually for USACE operations.***

06.A.03 Testing and monitoring.

a. Approved and calibrated testing devices shall be provided to measure hazardous substances, agents, and environments. (Devices shall be labeled indicating the name of the individual performing the calibration and date of the current calibration.)

b. Individuals performing testing and monitoring shall be trained in testing and monitoring procedures and hazards: testing devices shall be used, inspected, and maintained in accordance with the manufacturer's instructions, a copy of which shall be maintained with the devices.

c. NIOSH sampling and analytical methods, OSHA required, or other approved sampling and analytical methods shall be used; laboratories used for analysis shall be accredited by nationally recognized bodies, such as the American Industrial Hygiene Association (AIHA), for the type of analysis performed.

d. Determinations of the concentrations of, and hazards from, hazardous substances, agents, and environments shall be made by a qualified industrial hygienist or other competent person during initial startup and as frequently as necessary to ensure the safety and health of the work environment.

e. Records of testing/monitoring shall be maintained on site and shall be available to the GDA upon request.

06.A.04 The following precedence shall be in the control of exposure to hazardous substances, agents, and environments:

a. Engineering controls (such as local/general ventilation) shall be instituted to limit exposure to hazardous substances, agents, and environments within acceptable limits;

b. When engineering controls are not feasible or are not sufficient to limit exposure to hazardous substances, agents, and environments within acceptable limits, work practice controls (such as the wetting of hazardous dusts) shall be instituted;

c. When engineering or work practice controls are not feasible or are not sufficient to limit exposure to hazardous substances, agents, and environments within acceptable limits, PPE programs (such as the use of respirators or gloves) shall be instituted.

06.B HAZARDOUS SUBSTANCES

06.B.01 When any hazardous substance is procured, used, stored, or disposed, MSDS for the substances shall be available at the worksite. **>** ***See 01.B.06.***

a. Information contained in the MSDS shall be incorporated in the AHA/PHAs for the activities in which the material will be used and will be followed in the use, storage, and disposal of the material and the selection of hazard control and emergency response measures.

b. All employees using, storing, or disposing of hazardous substances shall receive training in the information contained in the MSDS for the substance and any general safety and health instruction required to understand this information.

06.B.02 When engineering and work practice controls are either infeasible or insufficient, appropriate PPE and sanitary facilities shall be provided and used for the transportation, use, and storage of hazardous substances.

a. When irritants or hazardous substances may contact skin or clothing, sanitary facilities and PPE shall be provided. PPE may include suitable gloves, face/eye protection and chemical protective suits. The qualified industrial hygienist or other competent personnel shall determine the scope and type of protective gear. Special attention should be given to selecting proper chemical protection when working with materials designated with a "skin" notation by OSHA standards or by ACGIH in the latest edition of their *Threshold Limit Values and Biological Exposure Indices* booklet. Such materials may produce systemic toxic effects through absorption through unbroken skin. ***> See also 02.D and Section 5.***

b. When the eyes or body of any person may be exposed to harmful substances, suitable facilities for quick drenching or flushing of the eyes and body shall be provided within the work area for immediate emergency use. ***> Reference ANSI Z358.1.***

(1) Emergency eyewash equipment must be provided where there is the potential for an employee's eyes to be exposed to corrosives, strong irritants, or toxic chemicals. ***>See Appendix Q for definitions.***

(2) The emergency eyewash equipment must irrigate and flush both eyes simultaneously while the operator holds the eyes open.

(3) The emergency eyewash equipment must deliver at least 0.4 gallons (gal) (1.5 liters (L)) of water per minute for 15 minutes or more.

(4) Personal eyewash units are portable, supplementary units that support plumbed units or self-contained units,

or both, by delivering immediate flushing for less than 15 minutes. Personal eyewash equipment may be used to supplement emergency washing facilities, however, they must not be used as a substitute.

(5) All plumbed emergency eyewash facilities and hand-held drench hoses must be activated weekly and inspected annually to ensure that they function correctly and that the quality and quantity of water is satisfactory for emergency washing purposes.

06.B.03 Transportation, use, storage, and disposal of hazardous substances shall be under the supervision of a qualified person.

a. Transportation, use, and storage of hazardous substances shall be planned and controlled to prevent contamination of people, animals, food, water, equipment, materials, and environment.

b. All storage of hazardous substances shall be in accordance with the recommendations of the manufacturer and accessible only to authorized persons.

c. Disposal of surplus or excess materials and containers shall occur in a manner that will not contaminate or pollute any water supply, ground water, or streams; and will comply with Federal, State, and local regulations and guidelines.

d. Containers that have been used for hazardous substances shall not be used for any other material until they have been cleaned in accordance with the hazardous substance manufacturer's recommendations.

e. Every hazardous substance being transported for disposal shall be transported with a copy of the substance's MSDS.

06.B.04 Process safety management of highly hazardous chemicals shall be employed in accordance with 29 CFR 1910.119 or 29 CFR 1926.64 whenever a work activity involves:

a. A process that involves a chemical at or above the threshold quantities listed in Appendix A of the above-cited CFRs, or

b. A process that involves a flammable liquid or gas as defined in 29 CFR 1926.59(c) on site in one location in a quantity of 10,000 lb (4535.9 kg) or more, except:

(1) Hydrocarbon fuels used solely for workplace consumption as a fuel if such fuels are not part of a process containing another highly hazardous chemical covered by the standards cited above, or

(2) Flammable liquids stored in atmospheric tanks or transferred that are kept below their normal boiling point without benefit of chilling or refrigeration.

06.B.05 Lead and Asbestos Hazard Control Activities.

a. General. Prior to beginning work that will impact lead-containing materials, to include protective and decorative coatings or asbestos-containing materials, a written lead compliance plan and/or asbestos hazard abatement plan shall be developed. The lead compliance plan shall be in accordance with 29 CFR 1910.1025 and 29 CRF 1926.62. The asbestos hazard abatement plan shall be in accordance with 29 CFR 1910.1001; 29 CFR 1926.1101; and 40 CFR 61, Subpart M. The plan(s) shall be developed as an appendix to the contract APP or, for USACE operations, the Project Safety Plan. The written plan(s) shall be submitted for acceptance by the GDA before beginning work. Unified Facility Guide Specifications (UFGS) for lead, asbestos and general safety and health requirements have been published and should be used in developing contract specifications.

b. Lead Compliance Plan. A lead compliance plan shall describe the procedures to be followed in order to protect workers from lead hazards while performing lead hazard control activities. The Plan shall address the following:

(1) A description of each work activity in which lead is emitted. The description shall include such topics as equipment and materials used, controls in place, crew size, job responsibilities, operating procedures, and maintenance practices; and shall also include work activity locations and lead-containing components keyed to the project drawings.

(2) Description of means to be used to achieve exposure compliance, including any engineering controls.

(3) Worker exposure assessment procedures to monitor and document worker lead exposure. Exposure monitoring shall include two types:

(a) Initial determination (monitoring for the initial determination may be omitted if there is sufficient objective or historical data showing action level compliance according to the requirements), and

(b) Continued exposure monitoring required as a result of initial exposure determinations.

(4) Protective clothing to protect workers from lead exposure, housekeeping procedures to prevent the spread of lead contamination both in and beyond the lead hazard control area, and hygiene facilities and practices to prevent workers from inadvertent ingestion of lead.

(5) Administrative controls to limit worker exposure to lead, including worker rotation schedule to be employed, if engineering controls or PPE precautions fail to eliminate exposures exceeding the permissible exposure limit (PEL).

(6) Medical surveillance procedures to monitor worker lead exposures and assure fitness for wearing respiratory protection devices.

(7) Competent person and worker training required to assure workers understand the significance of the lead

hazards and how to protect themselves.

(8) Detailed sketches identifying lead hazard control areas, including decontamination areas and facilities, critical barriers, and physical and air distribution boundaries.

(9) Perimeter or other area air monitoring outside or adjacent to the regulated area.

(10) Any security required for each lead hazard control area.

(11) Waste generation, characterization, transportation, and disposal (including recordkeeping).

c. Asbestos Hazard Abatement Plan. An asbestos hazard abatement plan shall describe the procedures to be followed to protect workers from asbestos hazards while performing work that will disturb asbestos-containing materials. The Plan shall address the following:

(1) A description of each activity where asbestos will be disturbed. The description shall include the OSHA class of work, equipment required, controls to be used, crew size, job responsibilities, maintenance practices, and locations keyed to the project drawings.

(2) Method of notification of other employers at the worksite

(3) Description of regulated areas, including types of containment, decontamination unit plan, and engineering controls.

(4) Air monitoring: personal, environmental, and clearance. Worker exposure assessment procedures shall address monitoring and documenting worker exposures. An initial determination shall be performed to meet the OSHA requirements. Monitoring for the initial determination may be omitted if there is sufficient objective or historical data showing compliance with the requirements. Continued

exposure monitoring may be required as a result of initial exposure determinations. Environmental monitoring shall demonstrate the absence of asbestos fiber migration outside the regulated area. Clearance monitoring shall document that the area has met specified clearance criteria.

(5) PPE, including respirators and clothing.

(6) Housekeeping procedures addressing the prevention of the spread of contamination both in and beyond the regulated area.

(7) Hygiene facilities and practices to prevent workers from inadvertently spreading contamination.

(8) Competent person and worker training required that assures workers understand the significance of the hazards and how to protect themselves.

(9) Medical surveillance, as required, to assess exposure and to monitor worker fitness to perform work tasks while wearing PPE to include respiratory protection devices.

(10) Waste generation, containerization, transportation, and disposal (including recordkeeping).

(11) Security, fire, and medical emergency response procedures.

06.C HOT SUBSTANCES

06.C.01 Heating devices and melting kettles.

a. Heating devices and melting kettles shall be placed on firm, level foundations and shall be protected against traffic, accidental tipping, or similar hazards and, whenever possible, shall be placed downwind from workers or occupied buildings..

b. A fire extinguisher, rated not less than 2-A:20-B:C, shall be available at all locations where heating devices and melting kettles are in use. ***> Hot work permits shall be required on Government installations unless otherwise indicated by the GDA.***

c. Heating devices and melting kettles shall not be left unattended when in use. ***> See 09.J.03***

d. Bituminous-material melting kettles shall be provided with an effective lid or hood and a thermometer in operating condition.

e. Bituminous-material melting kettles shall not be used or operated inside, atop, or within 25 ft (7.6 m) of buildings or combustible material.

06.C.02 Enclosed areas in which hot substances are heated or applied shall be ventilated.

06.C.03 Ladles, equipment, and material shall be moisture-free before being used or placed in heated material.

06.C.04 Transporting and handling hot substances.

a. Runways or passageways, clear of obstructions, shall be provided for all persons carrying hot substances.

b. Hot substances shall not be carried up or down ladders.

c. When hoists are used to raise or lower hot substances, attention shall be given to assuring that the hoisting mechanism is adequate for the loads imposed and is securely braced and anchored.

d. All persons handling hot substances shall be provided protection against contact with, or exposure to radiant heat, glare, fumes, and vapors of the substances. ***> See Section 5.***

e. Containers for handling and transporting hot substances shall be of substantial construction, free from any soldered joints or attachments, and shall not be filled higher than 4 in (10.1 cm) from the top.

06.D HARMFUL PLANTS, ANIMALS, AND INSECTS

06.D.01 Protection against hazards from animals and insects shall include, as applicable, the following:

a. PPE such as boots, hoods, netting, gloves, and masks;

b. Repellents;

c. Drainage or spraying of breeding areas;

d. Burning or destruction of nests;

e. Smudge pots and aerosols for protecting small areas;

f. Elimination of conditions that propagate insects or vermin;

g. Extermination measures;

h. Inoculation;

i. Approved first-aid remedies for employees; and

j. Instruction in recognition of the animals and insects.

06.D.02 In areas where employees are exposed to poisonous plants (e.g., poison ivy, oak, or sumac), the following protective measures, as applicable, shall be provided:

a. Removal or destruction of plants, where practical;

b. Appropriate protective clothing such as gloves;

c. Protective ointments;

d. Soap and water for washing exposed parts;

e. Approved first-aid remedies; and

f. Instruction in recognition and identification of the plants.

06.D.03 When burning poisonous plants, controls shall be instituted to prevent contact with or inhalation of toxic elements contained in the smoke.

06.E IONIZING RADIATION

06.E.01 Anyone who procures, uses, possesses, transports, transfers, or disposes of radioactive materials or radiation generating devices shall:

a. Notify, in writing, the GDA of the nature of the material or device, a description of the intended use, the location of use and storage, and all transportation and disposal requirements.

b. Secure appropriate authorization or permit if a licensed or DOD regulated radiological device or radioactive material is to be used on a DOD installation (a lead time of at least 45 days should be allowed for obtaining a DOD authorization or permit).

c. Provide to the GDA a copy of all Nuclear Regulatory Commission (NRC) or Agreement State licenses, the Army Radiation Authorization (ARA), and reciprocity forms (to include NRC Form 241), as applicable.

06.E.02 Qualified Personnel.

a. Operations involving radiation hazards or use of radioactive material or radiation generating devices shall be performed under the direct supervision of a person, designated in writing by the Radiation Safety Officer (RSO), who is qualified and

responsible for radiological safety. This person shall conduct surveys, evaluate and secure any specialized assistance to assure compliance with radiation protection standards.

b. The RSO will be technically qualified, meeting the experience, training, and education requirements listed below:

(1) Formally trained in radiation protection that includes the following topics: physics of radiation; radiation's interaction with matter; mathematics necessary for the subject matter; biological effects of radiation; type and use of instruments for detection, monitoring and surveying radiation; radiation safety techniques and procedures; and use of time, distance, shielding, engineering controls, and PPE to reduce radiation exposure.

(2) Hands-on training in the uses all of the equipment, instrumentation, procedures, and theory used in their unit.

(3) Knowledge of regulations (NRC, U.S. Environmental Protection Agency (USEPA), Department of Energy (DOE), DOT and DOD, to include all applicable DOD Components) pertaining to radioactive materials, radiation generating devices, and radioactive and mixed waste; and

(4) Knowledge of the USACE Radiation Safety Program, and recordkeeping requirements for work with radioactive materials and radiation generating devices.

06.E.03 Radiation Safety Program.

a. Operations involving regulated radiation hazards, and users of radioactive material or radiation generating devices, shall develop and implement a Radiation Safety Program. The program shall be managed by the RSO and based on sound radiation safety principles that shall keep occupational doses and doses to the public ALARA. A RSO and Ionizing Radiation Safety Committee (IRSC) shall be established in accordance

with 10 CFR 20 and DOD requirements as part of the Radiation Program. The program shall be reviewed annually.

b. All personnel entering an area where radioactive material or radiation generating devices are used, and where there is a potential for an individual to receive a Total Effective Dose Equivalent (TEDE) of 100 milliRems (mrem) or more in 1 year, shall receive instruction in:

(1) The presence of the material or device;

(2) Health and safety problems associated with exposure to radiation, including the potential effects of radiation on a pregnant female, the fetus, or embryo;

(3) Precautions and controls used to control exposure;

(4) Proper use of instrumentation and dosimetry in the area;

(5) The Radiation Safety Program required in 06.E.03a; and

(6) Their rights and responsibilities.

c. The Radiation Safety Program will include plans and procedures for handling credible emergencies involving radiation and radioactive materials. This will include coordination with civilian and/or military emergency response organizations as necessary.

06.E.04 Dose Limits.

a. Occupational dose limits shall be based on the TEDE. ***See Table 6-1.***

(1) An annual limit that is the more limiting of: 5 rems (0.05 sieverts (Sv)) TEDE, or the sum of the deep dose equivalent and the committed dose equivalent to any individual organ or tissue of 50 rems (0.5 Sv), or 15 rems (0.15 Sv) to the lens

TABLE 6-1

OCCUPATIONAL DOSE RATES

Body part	Annual limits (NRC) per RSO	Annual limits (NRC) without RSO	Suggested ALARA limits
Whole body	5 rem (0.05 Sv)	0.5 rem (0.005 Sv)	0.1 rem (0.001 Sv)
Individual organ	50 rem (0.5 Sv)	5 rem (0.05 Sv)	0.5 rem (0.005 Sv)
Lens of eye	15 rem (0.15 Sv)	1.5 rem (0.015 Sv)	0.15 rem (0.15 Sv)
Skin	50 rem (0.5 Sv)	5 rem (0.05 Sv)	0.5 rem (0.005 Sv)

of the eye, or 50 rems (0.5 Sv) shallow dose equivalent to the skin or any extremity.

(2) Without the written approval of the RSO, the annual occupational dose shall not exceed the more limiting of: 0.5 rems (0.005 Sv) TEDE, or the sum of the deep dose equivalent and the committed dose equivalent to any individual organ or tissue of 5 rems (0.05 Sv), or 1.5 rems (0.015 Sv) to the lens of the eye, or 5 rems (0.05 Sv) shallow dose equivalent to the skin, or any extremity.

(3) To keep doses ALARA, the user shall set administrative action levels below the annual dose limits. These action levels shall be realistic and attainable. Suggested action levels are the more limiting of: 0.1 rems (0.001 Sv) TEDE, or the sum of the deep dose equivalent and the committed dose equivalent to any individual organ or tissue of 0.5 rems (0.005 Sv), or 0.15 rems (0.0015 Sv) to the lens of the eye, or 0.5 rems (0.005 Sv) shallow dose equivalent to the skin or any extremity.

b. Planned special exposures shall not be used without the written consent of the RSO and the IRSC.

c. No employee under 18 years of age shall receive occupational exposure to ionizing radiation.

d. The dose to a declared pregnant worker shall not exceed 0.5 rem (0.005 Sv) during the entire gestation period and efforts shall be made to avoid variations in a uniform monthly exposure rate. If the dose to the embryo/fetus exceeds or is within 0.05 rem of 0.5 rem at the time of declaration, then dose to the embryo/fetus is limited to 0.05 rem for the remainder of gestation.

06.E.05 Radiation Monitoring, Surveys, and Dosimetry.

a. Users of radioactive material or radiation generating devices shall conduct surveys and monitoring to ensure occupational dose limits are not exceeded.

b. Instruments used for radiation monitoring and surveying shall be:

(1) Available and used whenever radioactive material or radiation generating devices are used;

(2) Properly calibrated to a National Institute of Standards and Technology (NIST) traceable source;

(3) Appropriate for the type and intensity of the radiation surveyed; and

(4) Operationally checked against a dedicated check source before each use.

c. Users of radioactive material or radiation generating devices and visitors or personnel performing work tasks in the area shall

coordinate with the RSO for appropriate dosimetry use whenever any of the following situations exist:

(1) An individual enters a Radiation Area (>5 mrem (50 microsieverts (µSv)) in any 1 hour), or a High Radiation Area (>100 mrem (1 millisieverts (mSv)) in any 1 hour), or a Very High Radiation Area (>500 rad (5 Gray (Gy)) in 1 hour),

(2) An individual has the potential to receive greater than 0.5 rem (0.005 Sv) in 1 year.

d. All external dosimetry shall be processed by a National Voluntary Laboratory Accreditation Program (NVLAP) certified laboratory. USACE personnel shall use the designated Department of Army (DA) dosimetry center.

e. Users of unsealed radioactive material sources shall institute an internal dosimetry program:

(1) When there is a potential for a worker to receive an internal dose of greater than 0.5 rem (5 mSv) per year;

(2) That is reviewed and approved by a qualified health physicist, and

(3) That contains provisions for a pre-exposure bioassay, a bioassay method capable of detecting internal radioactive materials, at a level below 10% of the annual limits of intake (ALI) listed in Appendix B of 10 CFR 20 for each radionuclide used, appropriate action levels for requiring additional bioassay, actions for individuals found to have internally deposited radioactive materials, and provisions for post-exposure bioassay.

06.E.06 Access, Storage, and Control.

a. All radiological devices and radioactive materials shall be designed, constructed, installed, used, stored, transported, and

disposed of in such a manner to assure personnel exposures are kept ALARA.

b. Users of radioactive materials or radiation generating devices shall post signs and control access to radiation areas in accordance with 06.E.08.

c. Where radiation levels exceed 2 mrem (20 µSv) in any 1 hour, users shall use engineering controls, shielding, access time limitation, and/or physical separation to keep doses to the public ALARA.

d. Users shall secure radioactive material and radiation generating devices against theft or unauthorized use.

e. Storage shall be in accordance with any license or permit requirements.

f. Radioactive material and radiation generating devices, not in storage, shall be under constant control and surveillance.

g. Operations involving regulated radiation hazards or users of regulated radioactive material or radiation generating devices shall conduct surveys to ensure that the public dose limit of 0.01 rem (0.0001 Sv) is not exceeded.

06.E.07 Respiratory Protection and other Controls.

a. Users of radioactive material shall, to the extent practicable, institute process or engineering controls to limit concentrations of radioactive materials in air.

b. Where process or engineering controls are unable to control airborne radioactive material concentrations, users shall increase monitoring and limit intakes of radioactive materials through control of access, limitation of exposure times, use of respiratory protection equipment, or other controls.

c. The use of respiratory protection equipment shall be in compliance with 05.E., of this manual, and shall be limited by the protection factors listed in Appendix A of 10 CFR 20.

06.E.08 Signs, Labels, and Posting Requirements.

a. The RSO shall post in a conspicuous location a sign or signs bearing the standard radiation symbol shown in Figure 8-5 and the following words:

(1) "**Caution, Radiation Area**" - areas where radiation field is equal to or greater than 5 mrem (0.05 mSv) in any 1 hour and less than 100 mrem (1 mSv) in any 1 hour;

(2) "**Caution, High Radiation Area**" - areas where radiation field is equal to or greater than 100 mrem in any 1 hour (0.1 mSv) and less than 500 rads (5 Gy) in any 1 hour;

(3) "**Grave Danger, Very High Radiation Area**" - areas where the radiation field is equal to or greater than 500 rads (5 Gy) in any 1 hour;

(4) "**Caution, Airborne Radioactivity Area**" - areas where airborne radioactive material concentrations are greater than the derived air concentration (DAC) limits listed in 10 CFR 20, Appendix B; or

(5) "**Caution, Radioactive Material**" - rooms where quantities of radioactive materials in excess of ten times the 10 CFR 20, Appendix C quantities are used or stored.

b. Users who receive or expect to receive a package containing radioactive material shall follow the package receipt procedures listed in 10 CFR 20.1906.

c. When a site has an NRC license, the RSO shall post an NRC Form 3 in a location visible to all employees who work with or around radioactive materials.

06.E.09 Radioactive Waste Disposal.

a. Radioactive sealed sources (and gauges) when no longer needed may be returned (transferred) to the manufacturer. The local USACE Command RSO must be notified and any applicable licenses or permits amended or terminated.

b. Radioactive waste disposal shall be coordinated with the GDA. For disposal actions specific to USACE operations and activities the GDA shall coordinate with the USACE Command RSO and the USACE Hazardous, Toxic, and Radioactive Waste Center of Expertise.

c. Tritium (H-3) and Carbon-14 used in liquid scintillation counting, at concentrations below 0.05 microcuries per gram (µCi/g), may be disposed without regard to its radioactivity. (Note: Many liquid scintillation fluids are hazardous wastes and must be disposed of as such.)

06.E.10 Records.

a. All users of radioactive material or radiation generating devices shall prepare and maintain records of the Radiation Safety Program for 3 years after termination of the license or permit.

b. For any individual who frequents a restricted or controlled area, and may potentially be exposed to 100 mrem (1 mSv) per year or more, the licensee shall prepare and maintain records to determine that person's:

(1) Occupational dose during the current year,

(2) Attempt to obtain records of cumulative occupational radiation exposure, and

(3) Dose received, both internal and external.

c. All users of radioactive material or radiation generating devices shall prepare and maintain records of all calculated or monitored radiation dose to individual members of the public so as to document compliance with 06.E.05.

06.E.11 Reports.

a. Any loss, theft, damage, or overexposure shall immediately upon discovery be reported to the RSO who will then file a report with NRC in accordance with the requirements of 10 CFR 20.

b. Annual reports shall be issued by the RSO for each individual USACE radiation worker with the recorded or calculated dose assigned to the USACE individual for the year or specific work project. These shall be maintained in such a manner that accumulated exposure can be determined at a future date.

06.E.12 Transportation, interstate or intrastate, shall comply with the requirements of the DOT for transportation of radioactive materials contained in 49 CFR.

06.E.13 Medical surveillance. ***> See Section 28 for requirements specific to work conducted under the provisions of 29 CFR 1910.120 and 29 CFR 1926.65.***

a. Medical examinations are not routinely required before occupational exposure to ionizing radiation. For USACE personnel, a medical examination shall be conducted in accordance with AR 40-5, when deemed necessary, by a physician the RSO or other regulations. The RSO will coordinate with supporting medical personnel to help assure that personnel receive appropriate occupational health surveillance.

b. All cases of overexposure and suspected ingestion or inhalation of radioactive materials shall be referred to a physician for examination.

06.E.14 Radon.

a. Any structure, building or tunnel, wherein workers may be reasonably expected to be exposed to radon concentrations exceeding 7.5 picocuries per liter (pCi/L), shall be tested for radon. Where the radon concentration exceeds 7.5 pCi/L, the provisions of 29 CFR 1910.1096 for exposure, SOPs, posting, training, medical records, record keeping and reporting shall apply. 29 CFR 1910.1096(c)(1) refers to Table 1 of Appendix B to 10 CFR 20. The Table 1 value for radon is 30 pCi/L.

b. USACE workers and USACE and DA facilities will comply with testing, exposure, and mitigation guidance provided in AR 200-1.

06.F NONIONIZING RADIATION AND MAGNETIC AND ELECTRIC FIELDS

06.F.01 Lasers.

a. Only qualified and trained employees may be assigned to install, adjust, and operate laser equipment. Proof of qualification of the laser equipment operator shall be in the operator's possession during operation.

b. Laser equipment shall bear a label to indicate make, maximum output, and beam spread.

c. Areas in which lasers are used shall be posted with standard laser warning signs. ***> See 08.A.05k.***

d. Employees whose work requires exposure to laser beams shall be provided with appropriate laser safety goggles that will protect for the specific wavelength of the laser and be of optical density adequate for the energy involved, as specified in Table 6-2.

TABLE 6-2

LASER SAFETY GOGGLE OPTICAL DENSITY REQUIREMENTS

Intensity, continuous wave maximum power density (watts/cm^2)	Attenuation	
	Optical density	Attenuation factor
0.01	5	10,000
0.1	6	100,000
1.0	7	1,000,000
10.0	8	10,000,000

Protective goggles shall bear a label identifying the following data: the laser wavelengths for which use is intended, the optical density of those wavelengths, and the visible light transmission.

e. Beam shutters or caps shall be used, or the laser turned off, when laser transmission is not required. When the laser is left unattended for a period of time (e.g., during lunch hour, overnight, or at change of shifts) the laser shall be turned off.

f. Only mechanical or electronic means shall be used as a detector for guiding the internal alignment of the laser.

g. The laser beam shall not be directed at employees: whenever possible, laser units in operation shall be set above the heads of employees.

h. When it is raining or snowing or when there is dust or fog in the air, the operation of laser systems shall be prohibited (as practical); during such weather conditions employees shall be kept out of range of the areas of source and target.

i. Employee exposure to laser power densities shall be within the threshold limit values (TLVs) as specified by the ACGIH in "Threshold Limit Values and Biological Exposure Indices."

j. Only Class I, II, or IIIa lasers may be used as hand-held pointing devices. Lasers used as pointing devices (e.g., during briefings) shall not be directed toward employees and shall be handled and stored in accordance with the manufacturer's recommendations.

06.F.02 Radio frequency and electromagnetic fields.

a. Ensure that no employee is exposed to electric or magnetic fields, radio frequency (RF) including infrared, ultraviolet, and microwave radiation levels exceeding the values listed in the AGCIH Threshold Limit Values and Biological Exposure Indices.

b. Protective clothing to minimize RF exposure will not be used as a routine method of protecting personnel.

c. All personnel routinely working with RF emitting equipment where exposures may exceed TLVs will receive training in RF hazards, procedures for minimizing these hazards, and their responsibility to limit potential overexposures. Operator's manuals, Training Orders, Equipment SOPs, etc. will be available for all RF generating equipment and safety guidance will be followed.

d. Whenever personnel are potentially exposed to RF fields exceeding PELs, the fields will be measured and evaluated using Institute of Electrical and Electronics Engineers (IEEE) guidance. District and/or project safety personnel will use this information and document RF environments.

06.G VENTILATION AND EXHAUST SYSTEMS

06.G.01 Design.

a. Ventilation systems shall be designed to prevent dispersion into the air, or drawing through the work area, of dusts, fumes, mists, vapors, and gases in concentrations causing harmful exposure.

b. The design of proposed engineering controls shall be approved by the GDA before acquisition or installation of the equipment; design data and drawings shall accompany the request for approval.

c. Airborne contaminants created by portable equipment (such as drills, saws, and grinding machines) in concentrations exceeding acceptable safe limits shall be effectively controlled at the source. **>** ***See 06.A.04.***

06.G.02 Ventilation systems shall be designed, installed, operated, and maintained in such a manner to ensure the maintenance of a volume and velocity of exhaust air sufficient to gather contaminants and safely transport them to suitable points for removal.

06.G.03 Duration of operation.

a. Ventilation systems shall be operated continuously during operations when persons are exposed to airborne contaminants or explosive gases at or above acceptable safe limits as defined in 06.A.01 or as otherwise specified by this manual, referenced standards, or regulations.

b. Ventilation systems shall remain in operation for a time after the work process or equipment has ceased to ensure the removal of any contaminants in suspension in or vaporizing into the air.

06.G.04 The efficiency of engineering control systems and methods shall be periodically verified as specified by the designated authority.

06.G.05 Dusts and refuse materials removed by exhaust systems or other methods shall be disposed of in a manner that will not create a hazard to employees or the public and in accordance with Federal, State, and local requirements.

06.H ABRASIVE BLASTING

06.H.01 Written operating procedures shall be developed and implemented for abrasive blasting operations, including pressurized pot procedures (filling, pressurizing, depressurizing, and maintenance and inspection).

a. The written operating procedures will be developed, maintained, and provided as stated in Appendix C.

b. No employee will be allowed to work in abrasive blasting operations unless he/she has met the medical surveillance and training and experience, and has been provided the PPE specified in Appendix C.

c. Pressurized systems and components shall be inspected, tested, certified, and maintained in accordance with the requirements of Section 20.

06.H.02 Abrasive blasting operations shall be evaluated to determine composition and toxicity of the abrasive and the dust or fume generated by the blasted material, including surface coatings. This determination shall be documented on the AHA developed for the abrasive blasting activity.

06.H.03 The concentration of respirable dust and fume in the breathing zone or persons exposed to the blasting operation shall be maintained in accordance with 06.A.01.

06.H.04 When silica sand or other substances containing more than 1% crystalline silica are used for abrasive blasting, the silica control program stated in Appendix C shall be implemented.

06.H.05 Blast cleaning enclosures shall be exhaust ventilated in such a way that a continuous inward flow of air will be maintained at all openings in the enclosure during the blasting operation.

a. All air inlets and access openings shall be baffled or so arranged that by the combination of inward air flow and baffling the escape of abrasive or dust particles into an adjacent work area will be minimized and visible spurts of dust will not be observed.

b. The rate of exhaust shall be sufficient to provide prompt clearance of the dust-laden air within the enclosure after cessation of the blasting.

06.I CONFINED SPACE

06.I.01 Confined space work covered by OSHA's General Industry (29 CFR 1910) and Construction (29 CFR 1926) standards shall be performed in accordance with 29 CFR 1910.146 and as provided herein. Confined space work covered by OSHA's Shipyard (29 CFR 1915) standard or USCG regulations shall be performed in accordance with those regulations. ***> For USACE conducted confined space work activities associated with ship and vessel repair and maintenance operations covered by 29 CFR 1915, consult the OSHA regional authority to determine if the requirements of 29 CFR 1910.146 and those provided herein are sufficient to be considered compliant for the specific confined space work tasks to be performed.***

a. At each facility or activity, the Contractor, or the GDA for USACE operations, shall assign in writing, a competent person for confined space (see Appendix Q for definition) to evaluate the potential for permit-required confined spaces (PRCSs).

b. The evaluation shall use the procedures and decision logic presented in Figure 6-1.

c. A list of confined spaces (permit-required and non-permit required) shall be maintained on site and shall be updated as new confined spaces are discovered.

d. All PRCSs shall be identified with a sign reading "DANGER-PERMIT-REQUIRED CONFINED SPACE-DO NOT ENTER" to inform personnel of the existence and location of, and danger posed by, the PRCS.

e. Facilities shall be reevaluated at least once annually for the presence of confined spaces. In addition, confined spaces shall be reevaluated whenever they or their characteristics change in a way that could lead to reclassification as a PRCS.

06.I.02 All employees with potential entry into a PRCS shall be notified of the existence, location, and hazards of the space. The Contractor, or the GDA for USACE operations, shall ensure all authorized entrants, attendants, and entry supervisors know the hazards that may be faced during entry, including information on the mode, signs or symptoms, behavioral effects, and consequences of the exposure.

06.I.03 Responsibilities.

a. Authorized entrants shall:

(1) Know the hazards that may be encountered during entry, including information on the mode, signs or symptoms, behavioral effects and consequences of hazardous exposure;

(2) Properly use equipment as required;

(3) Communicate with the attendant as necessary so the attendant can monitor entrant status and alert entrants of any need to evacuate the PRCS, and

FIGURE 6-1

PRCS PROCEDURES AND DECISION LOGIC

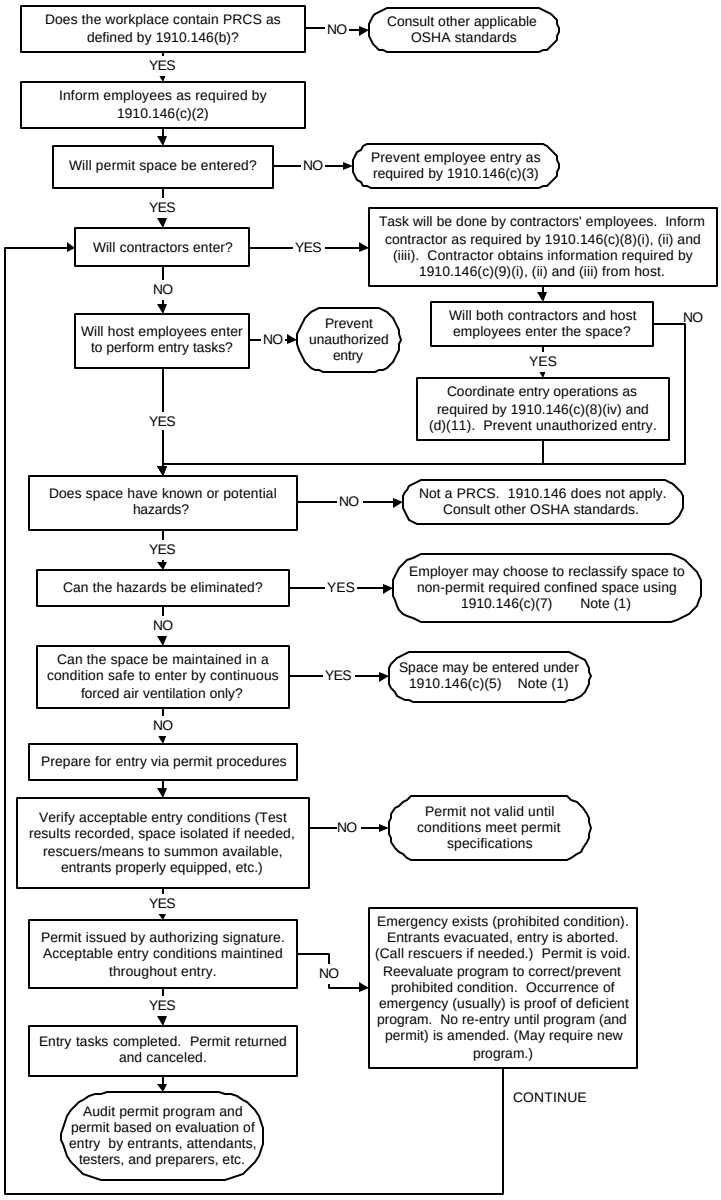

Note (1): spaces may have to be evaucated and re-evaluated if hazards arise during entry

FIGURE 6-1 (CONTINUED)

Test conditions in the permit space to determine if acceptable entry conditions exist before entry is authorized to begin. If isolation of the space is feasible because the space is large or is part of a continuous system (e.g., sewer system), pre-entry testing shall be performed to the extent feasible before entry is authorized. If entry is authorized, entry conditions shall be continuously monitored in the areas where authorized entrants are working. Test or monitor the permit space as necessary to determine if acceptable entry conditions are maintained during entry operations. The space will be tested first for oxygen, then for combustible gases and vapors, and then for toxic gases and vapors.

---

(4) Evacuate the PRCS and alert the attendant whenever they recognize any warning sign or symptom of exposure to a dangerous situation or they detect a prohibited condition, or whenever the attendant or entry supervisor orders evacuation or an evacuation alarm is activated.

b. Attendants shall:

(1) Know the hazards that may be encountered during entry, including information on the mode, signs or symptoms, behavioral effects, and consequences of hazardous exposure in authorized entrants;

(2) Remain outside the PRCS during entry operations until relieved by another attendant;

(3) Take action when unauthorized persons approach or enter a PRCS while entries are underway (warn that they must stay away from the PRCS or that they must immediately exit if they have entered the PRCS; inform authorized persons and the entry supervisor if unauthorized persons have entered the PRCS);

(4) Continuously maintain an accurate count of authorized entrants in the PRCS. Ensure that the means used to identify authorized entrants is accurate.

(5) Communicate with authorized entrants as necessary to monitor entrant status and to alert entrants of the need to evacuate the PRCS;

(6) Monitor activities inside and outside the PRCS to determine if it is safe for entrants to remain in the PRCS;

(7) Immediately order evacuation of the PRCS if they detect a prohibited condition, the behavioral effects of hazard exposure in an authorized entrant, or a situation outside the PRCS that could endanger the authorized entrants, or if the attendant cannot effectively and safely perform any of his or her duties and responsibilities;

(8) Perform non-entry rescues, as specified by the confined space entry permit; summon rescue and other emergency services as soon as it is determined that authorized entrants may need assistance to escape from PRCS hazards, and

(9) Not, under any circumstance, monitor more than one occupied PRCS at any given time; not perform any duty that might interfere with their primary duty to monitor and protect the authorized entrants.

c. Entry supervisors shall:

(1) Know the hazards that may be encountered during entry, including information on the mode, signs or symptoms, behavioral effects, and consequences of hazardous exposure in authorized entrants and attendants;

(2) Verify, by checking that the appropriate entries have been made on the permit, that all tests specified by the permit have been conducted and that all procedures and

equipment specified by the permit are in place before endorsing the permit and allowing entry to begin;

(3) Terminate the entry and cancel the permit when the entry operations covered by the entry permit have been completed or whenever a condition that is not allowed under the entry permit arises in or near the PRCS;

(4) Verify that rescue services are available and that the means for summoning them are operable;

(5) Remove unauthorized individuals who enter or who attempt to enter the PRCS during entry operations;

(6) Determine (at intervals dictated by the hazards and operations performed within the PRCS and whenever responsibility for a PRCS entry operation is transferred) that entry operations are consistent with terms of the entry permit and that acceptable entry conditions are maintained.

d. Contractors who perform work in, or who may be required to enter, a PRCS on a USACE-controlled facility shall:

(1) Request and obtain (from USACE) information on the location and hazards of PRCS that his or her employees will be entering or working near, before start of work;

(2) Request and obtain any pertinent information on USACE or previous contractor experience with PRCS that his/her employees will be entering or working near, before start of work;

(3) Be apprised of any precautions or procedures that the USACE installation has implemented for the protection of employees in or near PRCSs;

(4) Submit a copy of their written PRCS program, which meets the requirements of this section and 29 CFR

1910.146 without respect to 1910.146(a), that will be followed;

(5) Coordinate PRCS entry operations with USACE; and

(6) Debrief USACE personnel at the conclusion of entry operations on any matters concerning the entry program or any hazards created or confronted in the PRCS during entry operations.

06.I.05 Written PRCS program.

a. Each facility and each activity that has a PRCS shall maintain a written PRCS program.

b. PRCS programs shall cover the elements in Table 6-3.

c. The activity or facility, as part of its PRCS program, will provide, maintain, and assure the proper use of:

(1) Testing and monitoring equipment;

(2) Ventilating equipment needed to obtain acceptable entry conditions;

(3) Communications equipment;

(4) PPE used where engineering controls and work practices do not adequately protect USACE personnel;

(5) Lighting equipment;

(6) Equipment, such as ladders, needed for safe ingress and egress by authorized entrants;

(7) Rescue and emergency equipment; and

TABLE 6-3

PRCS PROGRAM ELEMENTS

- Hazard identification: identification of the PRCS hazards.
- Hazard control: procedures, practices, and controls developed and implemented to eliminate or control PRCS hazards.
- Permit system: written system for preparing, issuing, implementing, and canceling entry permits, including provisions for closing permit-required spaces and returning them to service after work is completed.
- Specialized equipment: specialized equipment (e.g., monitoring instruments, ventilation equipment, PPE, communication equipment, rescue equipment) that shall be provided and used.
- Personnel: designation and responsibilities of employees who have a role in the PRCS entry.
- Testing and monitoring: provisions for testing and monitoring the PRCS to determine if it is safe for entry and that conditions remain acceptable for the duration of the entry.
- Emergency procedures: emergency procedures and provisions, including personnel and equipment, which will be implemented.
- Outside contractors: coordination of activities of any contractors who will be required to work in or around PRCSs.
- Information and training: procedures and requirements for informing/training employees on PRCS responsibilities and hazards.
- Program review: requirements for noting on the permit any problems encountered during the entry; procedures for reviewing canceled permits at least once a year to determine if there are needs to modify existing procedures to ensure continued employee protection.

(8) Any other equipment necessary for safe entry into and rescue from permit spaces.

06.I.06 PRCS entry procedures.

a. The Contractor, or the GDA for USACE operations, shall develop and implement a system for the preparation, issuance, use, and cancellation of PRCS entry permits (ENG Form 5044-R or equivalent shall be used).

(1) Before entry begins, the entry supervisor identified on the permit shall sign the permit to authorize entry.

(2) The completed permit shall be made available at the time of entry to all authorized entrants, by posting it at the entry portal or by any other equally effective means, so that the entrants can confirm the pre-entry preparations have been completed.

(3) The duration of the permit may not exceed the time required to complete the task or job identified on the permit.

b. Plans and procedures shall be developed and implemented or summoning rescue and emergency services, for rescuing entrants from PRCSs, and for preventing unauthorized personnel from attempting a rescue.

c. The entry supervisor shall designate at least one attendant who will remain, for the duration of entry operations, outside the PRCS into which entry is authorized.

d. The Contractor or GDA for USACE operations shall develop and implement procedures to coordinate entry operations when more than one work crew are authorized entry so that employees of one crew do not endanger the employees of other crews.

e. The Contractor or GDA for USACE operations shall review entry operations when there is reason to believe that the measures taken under the PRCS program may not be sufficient to protect personnel and shall revise the program to correct any deficiencies before subsequent entries are authorized. Any problems encountered during an entry operation shall be noted on the pertinent permit so that appropriate revisions to the permit space program can be made.

f. On at least a yearly basis, the designated official shall review the canceled permits for the past 12 months and revise the program as necessary to ensure that employees participating in entry operations are protected from PRCS hazards.

06.I.07 Training.

a. All employees shall be instructed not to enter PRCSs without the proper permit and without following the procedures and practices outlined in the permit.

b. Employees who are required to enter PRCSs or act as an attendant or entry supervisor shall be trained to acquire the understanding, knowledge, and skills necessary for the safe performance of their assigned responsibilities and duties. These employees must also be familiar with the kinds of hazards they might face during entry and understand the modes, signs, symptoms, and consequences of exposure.

c. Entrants, attendants, and supervisors shall receive training including but not limited to training in Table 6-4.

d. Training shall be conducted:

(1) To establish employee proficiency in the duties required,

(2) Before the employee is first assigned confined space duties (initial training),

(3) Before a change in assigned duties,

TABLE 6-4

PRCS TRAINING

Entrants shall receive training on:

> the methods used to communicate with attendants and the means attendants will use to notify them of emergencies;
> the operation of any specialized equipment they are expected to use, including monitoring and rescue equipment; and
> evacuation signals and procedures and the need for entrants to notify the attendant and evacuate the PRCS if they detect any dangerous condition.

Attendants shall receive training on:

> procedures for monitoring inside and outside the PRCS and in recognizing conditions that might be hazardous to entrants;
> procedures for communicating with entrants;
> procedures for evacuating entrants from the PRCS and under what conditions evacuation is required;
> procedures for controlling access to the PRCS and to warn unauthorized people away from the space;
> their responsibility to remain outside the PRCS during entry, unless they are relieved by another attendant; and
> non-entry rescue procedures.

Supervisors shall receive training on:

> verifying that the permit has been completed properly,
> procedures for verifying that all tests specified by the permit have been conducted,
> requirements for verifying that all procedures and equipment specified by the permit are in place before allowing entry to begin,
> procedures for determining if conditions are acceptable for entry,
> authorizing entry,
> supervising entry operations, and
> terminating entry.

(4) Whenever there is a change in permit space operations that presents a hazard about which an employee has not previously been trained, and

(5) Whenever the Contractor or GDA for USACE operations has reason to believe that or that there are inadequacies in the employee's knowledge or use of these procedures.

e. The instructor shall verify the successful completion of training and provide written certification. The employer shall document employee training and develop a list of names of the trained employees and the dates of training.

06.I.08 On-site rescue/emergency teams.

a. Each member of the rescue/emergency team shall be provided with, and trained in the proper use of, PPE and equipment necessary for making rescues from PRCSs.

b. Each member of the rescue/emergency team shall practice making PRCS rescues at least once every 12 months, by means of simulated rescue operations in which they remove dummies, manikins, or persons from the actual PRCS or from representative PRCS. Representative PRCS shall, with respect to opening size and configuration, simulate the hazards and types of PRCS from which rescue is to be performed.

c. Each member of the rescue/emergency team shall receive the same level of training as authorized entrants and shall be trained in basic first aid and in CPR. Provisions shall be made so that whenever the team is on call, at least two members of the team shall have current certification in first aid and CPR.

d. If an injured entrant is exposed to a substance that requires that a MSDS or other similar written information is kept at the worksite, the MSDS or written information shall be made available to the medical facility treating the exposed entrant.

06.I.9 Off-site rescue and emergency services.

a. The rescue/emergency service will be informed of the hazards they may confront when called on to perform rescues.

b. The rescue/emergency service shall be provided access to all permit spaces from which rescue may be necessary so that the service can develop appropriate rescue plans and practice rescue operations.

06.I.10 To facilitate non-entry rescues, retrieval systems or methods shall be used whenever an authorized entrant enters a PRCS, unless the retrieval equipment would increase the overall risk of entry or would not contribute to the rescue of the entrant.

a. Each authorized entrant shall use a chest or full-body harness, with a retrieval line attached at the center of the entrant's back near the shoulder level or above the entrant's head (wristlets may be used in lieu of the chest or full-body harness if the employer can demonstrate that the use of a chest or full-body harness is infeasible or creates a greater hazard and that the use of wristlets is the safest and most effective alternative).

b. Retrieval lines shall be attached to a mechanical device or fixed point outside the permit space in such a manner that rescues can begin as soon as the rescuer becomes aware that rescue is necessary.

c. A mechanical device shall be ready to retrieve personnel from vertical PRCSs more than 5 ft (1.5 m) deep.

d. If an injured entrant is exposed to a substance that requires that a MSDS or other similar written information is kept at the worksite, the MSDS or written information shall be made available to the medical facility treating the exposed entrant.

06.J INCLEMENT WEATHER AND ENVIRONMENTAL HAZARDS

06.J.01 When there are warnings or indications of impending severe weather (heavy rains, damaging winds, tornados, hurricanes, floods, lightning, etc.), weather conditions shall be monitored and appropriate precautions taken to protect personnel and property from the effects of the severe weather.

06.J.02 Employers shall develop a comprehensive written site-specific heat/cold stress monitoring plan, in accordance with this Section, the ACGIH "Threshold Limit Values and Biological Exposure Indices" and other references the employer determines applicable to protect employees exposed to temperature extremes. The plan shall be incorporated in the employer's APP or project safety and health plan and shall follow the guidelines of 06.J.04 of this manual.

06.J.03 In hot environments, drinking water shall be made available to workers and workers shall be encouraged to frequently drink small amounts, e.g., one cup every 15-20 minutes: the water shall be kept reasonably cool. ***See Section 02.B.***

06.J.04 In situations where heat stress may impact worker safety and health, worker acclimatization and workloads shall be assessed and work/rest regimens shall be established.

a. For workers in permeable work clothing, Wet Bulb Globe Temperature (WBGT) Index or physiological monitoring shall be conducted and work/rest regimens established as specified in the ACGIH's "Threshold Limit Values and Biological Exposure Indices."

b. For workers in impermeable work clothing, only physiological monitoring shall be conducted, and work/rest regimens and fluid replacement schedules shall be established as specified in the ACGIH's "Threshold Limit Values and Biological Exposure Indices."

06.J.05 Employees working in air temperatures of -15 °F (-26 °C) or less shall use the work-/warm-up regimen specified in the ACGIH "Threshold Limit Values and Biological Exposure Indices."

06.J.06 At air temperatures of 36 °F (2 °C) or less, workers who become immersed in water or whose clothing becomes wet shall immediately be provided a change of clothing and treated for hypothermia.

06.J.07 When manual dexterity is not required of a worker, he or she shall be provided thermally protective gloves when exposed to the following temperatures.

a. For light work, 40 °F (4 °C) and below, and

b. For moderate and heavy work, 20 °F (-6.6 °C) and below.

06.J.08 When fine work is required to be performed with bare hands for more than 10-20 minutes in an environment below 50 °F (10 °C), provisions shall be established for keeping workers' hands warm.

06.J.09 Metal handles and control bars shall be covered by thermal insulating material at temperatures below 30 °F (–1 °C).

06.J.10 Cold weather sheltering and clothing requirements.

a. If wind chill is a factor at a work location, the cooling effect of the wind shall be reduced by shielding the work area or providing employees an outer windbreak layer garment. An AHA and/or PHA shall be prepared as an attachment to the site-specific, cold-stress monitoring plan and shall identify specific controls to minimize employee exposure to extreme cold.

b. Extremities, ears, toes, and nose shall be protected from extreme cold by protective clothing.

c. Employees whose clothing may become wet shall wear an outer layer of clothing that is impermeable to water.

d. Outer garments must provide for ventilation to prevent wetting of inner clothing by sweat.

e. If clothing is wet, the employee shall change into dry clothes before entering a cold environment.

f. Workers shall change socks and removable felt insoles at regular daily intervals or shall use vapor barrier boots.

g. Due to the added danger of cold injury due to evaporative cooling, workers handling evaporative liquid (such as gasoline, alcohol, or cleaning fluids) at air temperatures below 40 °F (4 °C) shall take precautions to avoid soaking of clothing or contact with skin.

h. Eyewear providing protection against ultraviolet light, glare, and blowing ice crystals shall be provided to workers employees in snow- and/or ice-covered terrain.

06.J.11 Environmental monitoring shall be conducted as follows:

a. At air temperatures below 45 °F (7 °C) the temperature shall be monitored.

b. At air temperatures below 30 °F (-1 °C) the temperature shall be measured and recorded at least every 4 hours. In indoor workplaces the wind speed should be measured and recorded at least every 4 hours when the rate of air movement exceeds 5 miles per hour (mph) (2.2 meters per second (m/s)); in outdoor work situations the wind speed should be measured and recorded with the air temperature.

c. The equivalent chill temperature and frost-bite precautions shall be determined by using Tables 6-5 and 6-6. ***>To convert degrees Fahrenheit (^oF) to degrees Celsius (^oC) use formula: $^oC = (^5/_9) \times (^oF-32)$. To convert wind speed in miles per hour (mph) to meters per second (m/s) use formula: m/s = mph x 0.447.)***

06.J.12 Workers shall be excluded from work in cold (30 °F (-1 °C) or below) if they are suffering from diseases or taking medication that interferes with normal body temperature regulation or reduces tolerance to work in cold environments.

06.J.13 Where employees are exposed to solar radiation for short periods and there is the potential for sunburn or are exposed for prolonged periods where long-term exposure could lead to health effects such as skin cancer, they shall be provided sun screen with a sun protection factor (SPF) appropriate for their skin type and exposure. Sunscreens shall be used only in accordance with the manufacturer's recommendations.

06.K CUMULATIVE TRAUMA PREVENTION

06.K.01 Work activities that require workers to conduct lifting, handling, or carrying; rapid and frequent application of high grasping forces; repetitive hand/arm manipulations; tasks that include continuous, intermittent, impulsive, or impact hand-arm vibration or whole body vibration; and other physical activities that stress the body's capabilities shall be evaluated by a competent person to ensure the activities are designed to match the capabilities of the workers.

06.K.02 When work activities that stress the body's capabilities are identified, the employer shall establish a cumulative trauma disorders prevention plan and incorporate it in the APP. The plan shall incorporate processes that recognize cumulative trauma hazards, isolate causative factors, inform and train workers, and implement controls.

TABLES 6-5 AND 6-6

Wind Chill Temperature Table

Wind Speed (mph) ↓	Air Temperature (°F) 40	35	30	25	20	15	10	5	0	-5	-10	-15	-20	-25	-30	-35	-40	-45
0	40	35	30	25	20	15	10	5	0	-5	-10	-15	-20	-25	-30	-35	-40	-45
5	36	31	25	19	13	7	1	-5	-11	-16	-22	-28	-34	-40	-46	-52	-57	-63
10	34	27	21	15	9	3	-4	-10	-16	-22	-28	-35	-41	-47	-53	-59	-66	-72
15	32	25	19	13	6	0	-7	-13	-19	-26	-32	-39	-45	-51	-58	-64	-71	-77
20	30	24	17	11	4	-2	-9	-15	-22	-29	-35	-42	-48	-55	-61	-68	-74	-81
25	29	23	16	9	3	-4	-11	-17	-24	-31	-37	-44	-51	-58	-64	-71	-78	-84
30	28	22	15	8	1	-5	-12	-19	-26	-33	-39	-46	-53	-60	-67	-73	-80	-87
35	28	21	14	7	0	-7	-14	-21	-27	-34	-41	-48	-55	-62	-69	-76	-82	-89
40	27	20	13	6	-1	-8	-15	-22	-29	-36	-43	-50	-57	-64	-71	-78	-84	-91
45	26	19	12	5	-2	-9	-16	-23	-30	-37	-44	-51	-58	-65	-72	-79	-86	-93
50	26	19	12	4	-3	-10	-17	-24	-31	-38	-45	-52	-60	-67	-74	-81	-88	-95

RISK OF FROSTBITE (see times on chart below)

GREEN LITTLE DANGER (frostbite occurs in >2 hours in dry, exposed skin)
YELLOW INCREASED DANGER (frostbite could occur in 45 minutes or less in dry, exposed skin)
RED GREAT DANGER (frostbite could occur in 5 minutes or less in dry, exposed skin)

Time to occurrence of frostbite in minutes or hours

(In the most susceptible 5% of personnel.)

Wind Speed (mph) ↓	Air Temperature (°F) 10	5	0	-5	-10	-15	-20	-25	-30	-35	-40	-45
0	*>2h*	*>2h*	*>2h*	*>2h*	*>2h*	*>2h*	*40*	*22*	*20*	*13*	*11*	*9*
5	>2h	>2h	>2h	>2h	31	22	17	14	12	11	9	8
10	>2h	>2h	>2h	28	19	15	12	10	9	7	7	6
15	>2h	>2h	33	20	15	12	9	8	7	6	5	4
20	>2h	>2h	23	16	12	9	8	8	6	5	4	4
25	>2h	42	19	13	10	8	7	6	5	4	4	3
30	>2h	28	16	12	9	7	6	5	4	4	3	3
35	>2h	23	14	10	8	6	5	4	4	3	3	2
40	>2h	20	13	9	7	6	5	4	3	3	2	2
45	>2h	18	12	8	7	5	4	4	3	3	2	2
50	>2h	16	11	8	6	5	4	3	3	2	2	2

WET SKIN COULD SIGNIFICANTLY DECREASE THE TIME FOR FROSTBITE TO OCCUR.

*Source: USARIEM Technical Note "SUSTAINING HEALTH & PERFORMANCE IN COLD WEATHER OPERATIONS," October 2001

06.K.03 Control measures to minimize hand-arm vibration shall include: adherence to the TLV guidelines as specified in the ACGIH in "Threshold Limit Values and Biological Exposure Indices"; the use of anti-vibration tools and/or gloves; implementation of work practices that keep the worker's hands and body warm and minimize the vibration coupling between the worker and the vibration tool; and application of specialized medical surveillance to identify personnel susceptible to vibration.

06.L INDOOR AIR QUALITY (IAQ) MANAGEMENT

06.L.01 IAQ Investigations. Supervisors will report employee concerns or complaints of IAQ problems to the facility manager/owner or other designated representative. That individual will be responsible for investigating and resolving the IAQ complaint in a timely manner and reporting back to the supervisor. For leased facilities, procedures for resolving IAQ issues should ultimately be investigated and resolved by the lessor. An industrial hygienist or other qualified and competent person will initiate an IAQ investigation using appropriate guidelines published by ACGIH; AIHA; ANSI; American Society of Heating, Refrigeration, and Air Conditioning Engineers (ASHRAE); USEPA; OSHA; NIOSH; or other Federal, DOD, State, local, and host nation requirements.

a. Ensure building activities, such as painting, roof repairs, carpet installation and repair and other activities likely to involve usage of chemicals or solvents, are conducted after normal working hours where possible or in a manner that will prevent exposure to occupants.

b. Educate employees and supervisors concerning measures they can take to help maintain acceptable IAQ in their work areas. Employees shall be instructed not to make unauthorized modifications to the heating, ventilation, and air conditioning (HVAC) systems (i.e., blocking off vents, removing ceiling tiles).

06.L.02 Environmental tobacco smoke (ETS). Employees shall be protected from involuntary exposure to ETS in working and public living environments.

a. Smoking shall be prohibited inside all DOD vehicles, aircraft, vessels, and work buildings.

b. Provide designated smoking areas only in outdoor locations that are not commonly used or accessed by nonsmokers. Receptacles will be provided in designated smoking areas for the containment of cigarette butts and other smoking by-products.

c. Locate designated smoking area away from supplied-air intakes and building entryways/egresses to prevent ETS from entering occupied buildings and structures.

SECTION 7

LIGHTING

07.A GENERAL

07.A.01 While work is in progress, offices, facilities, accessways, working areas, construction roads, etc., shall be lighted by at least the minimum light intensities specified in Table 7-1.

07.A.02 Office lighting shall be in accordance with ANSI/ Illuminating Engineering Society of North America (IESNA) RP-1.

07.A.03 Roadway lighting shall be in accordance with ANSI/IESNA RP-8.

07.A.04 Marine lighting shall be in accordance with ANSI/IESNA RP-12.

07.A.05 Means of egress.

a. Means of egress shall be illuminated, with emergency and non-emergency lighting, to provide a minimum of 1 footcandle (fc) (lumens per square foot (lm/ft^2)) (11 lux (lx), measured at the floor. ***> Reference NFPA 101.***

b. The illumination shall be arranged so that the failure of any single lighting unit, including the burning out of an electric bulb, will not leave any area in total darkness.

07.A.06 Lamps and fixtures will be guarded and secured to preclude injury to personnel. Open fluorescent fixtures will be provided with wire guards, lenses, tube guards and locks, or safety sockets that require force in the horizontal axis to remove the lamp.

07.A.07 Lamps for general illumination shall be protected from accidental contact or breakage. Protection shall be provided by elevation of at least 7 ft (2.1 m) from normal working surface or suitable fixture or lamp holder with a guard.

TABLE 7-1

MINIMUM LIGHTING REQUIREMENTS

Facility or function	Illuminance – lx (lm/ft^2)
Accessways - general indoor - general outdoor - exitways, walkways, ladders, stairs	 55 (5) 33 (3) 110 (10)
Administrative areas (offices, drafting and meeting rooms, etc.)	540 (50)
Chemical laboratories	540 (50)
Construction areas - general indoor - general outdoor - tunnels and general underground work areas (minimum 110 lx required at tunnel and shaft heading during drilling, mucking, and scaling)	 55 (5) 33 (3) 55 (5)
Conveyor routes	110 (10)
Docks and loading platforms	33 (3)
Elevators, freight and passenger	215 (20)
First-aid stations and infirmaries	325 (30)
Maintenance/operating areas/shops - vehicle maintenance shop - carpentry shop - outdoors field maintenance area - refueling area, outdoors - shops, fine detail work - shops, medium detail work - welding shop	 325 (30) 110 (10) 55 (5) 55 (5) 540 (50) 325 (30) 325 (30)
Mechanical/electrical equipment rooms	110 (10)
Parking areas	33 (3)
Toilets, wash, and dressing rooms	110 (10)
Visitor areas	215 (20)
Warehouses and storage rooms/areas - indoor stockroom, active/bulk storage - indoor stockroom, inactive - indoor rack storage - outdoor storage	 110 (10) 55 (5) 270 (25) 33 (3)
Work areas – general (not listed above)	325 (30)

SECTION 8

ACCIDENT PREVENTION SIGNS, TAGS, LABELS, SIGNALS, PIPING SYSTEM IDENTIFICATION, AND TRAFFIC CONTROL

08.A SIGNS, TAGS, LABELS, AND PIPING SYSTEMS

08.A.01 Signs, tags, and labels shall be provided to give adequate warning and caution of hazards and instruction and directions to workers and the public.

08.A.02 Signs, tags, and labels shall be visible at all times when the hazard or problem exists and shall be removed or covered when the hazard or problem no longer exists.

08.A.03 All employees shall be informed as to the meaning of the various signs, tags, and labels used throughout the workplace and what special precautions are required: all employees shall be instructed that danger signs and tags indicate immediate danger and shall be informed of any special precautions that may be required.

08.A.04 Signs, Tags, Placards, Labels, and Piping Systems shall be in accordance with the following standards:

a. ANSI/IEEE C95.2.

b. ANSI Z136.1.

c. ANSI Z535.1.

d. ANSI Z535.2.

e. ANSI Z535.5.

f. 29 CFR 1910.145.

g. DOT Federal Highway Administration's, *Manual on Uniform Traffic Control Devices for Streets and Highways*

h. ANSI/American Society of Mechanical Engineers (ASME) A13.1.

08.A.05 The type of sign or tag used in a particular situation shall be appropriate for the degree of hazard or intent of message. ***> See Figure 8-1 for Sign and Tag Signal Word Headings. See Figure 8-2 for Example Tag Layout. See Figure 8-3 for Example Sign Layout. See Table 8-1 for Accident Prevention Sign Requirements.***

a. **DANGER SIGNS:** Danger signs must conform to the following requirements:

(1) Danger signs will be used only when the circumstances indicate an imminently hazardous situation that, if not avoided, **will** result in death or serious injury,

(2) Danger signs must have the signal word "**DANGER**" in white letters placed at the top of a rectangular safety red background placed at the top of the sign. The safety alert symbol shall precede the signal word. The base of symbol shall be on the same horizontal level as the base of the letters of the signal word – the height equaling or exceeding the signal word height. ***> See Figure 8-1.***

Alternative: As an alternative, danger signs may have "**DANGER**" in white letters on a safety red oval background with a white border on a black rectangular field. This distinctive panel shall appear in the uppermost portion of the sign. No other signal word or symbol shall be used within this distinctive shape and color arrangement.

(3) The message panel shall be in black on a white background or white letters on a black background and the symbol/pictorial panel, if used, shall be square with a black

safety red, or black and safety red symbol on a white back background.

b. **WARNING SIGNS:** Warning signs must conform to the following requirements:

(1) Warning signs may be used only when the circumstances indicate a potentially hazardous situation that, if not avoided, **could** result in death or serious injury.

(2) Warning signs must have the signal word "**WARNING**" in black letters on a rectangular orange background placed at the top of the sign. The safety alert symbol shall precede the signal word. The base of symbol shall be on the same horizontal level as the base of the letters of the signal word – the height equaling or exceeding the signal word height. ***> See Figure 8-1.***

Alternative: As an alternative, warning signs may have the signal word "**WARNING**" in black letters within a safety orange truncated diamond on a black rectangular background. The distinctive panel shall be located at the uppermost portion of the sign. No other word or symbol shall be used within this distinctive shape or color arrangement.

(3) The message panel should be in black letters on a white background or white letters on a black background. The message may, as an alternative, be in black letters on a safety orange background. The symbol/pictorial panel, if used, shall be square with a black symbol n a white background. The symbol panel used as an alternative may be square with a black symbol on an orange background.

c. **CAUTION SIGNS:** Caution signs must conform the to following requirements:

(1) Caution signs may be used only when circumstances indicate a potentially hazardous situation that, if not avoided,

may result in a minor or moderate injury. It may also be used to alert against unsafe practices that may result in property damage.

(2) Caution signs should have the signal word "**CAUTION**" in black letters on a rectangular yellow background placed at the top of the sign. The safety alert symbol shall precede the signal word if the hazard is a potential personal injury hazard. (The alert symbol is not used when the situation is used to indicate property damage, only accidents.) The base of symbol shall be on the same horizontal level as the base of the letters of the signal word – the height equaling or exceeding the signal word height. **>** ***See Figure 8-1.***

Alternative: As an alternative, caution signs may have the signal word "**CAUTION**" in safety yellow letters within a black rectangular background, and this distinctive panel shall be located in the uppermost portion of the sign. No other signal word or symbol shall be used with this distinctive color or signal shape arrangement.

(3) The message panel should be in black letters on a white background or white letters on a black background. The message may, as an alternative, be in black letters on a safety yellow background. The symbol/pictorial panel, if used, shall be square with a black symbol on a white background. As an alternative, it may be square with a black symbol on a safety yellow background.

d. **NOTICE SIGNS:** Notice signs should conform to the following requirements:

(1) Notice signs may be used to indicate a statement of company policy directly or indirectly related to the safety of personnel or protection of property. The signal word SHOULD NOT be associated directly with a hazard or hazardous situation and shall not be used in place of "DANGER," "WARNING," or "CAUTION."

(2) Notice signs shall have the signal word "**NOTICE**" in white italic letters on a safety blue background on a rectangular field and this distinctive panel shall be located in the uppermost portion of the visual alerting device. No other signal word or symbol shall be used within this distinctive shape and color arrangement.

(3) The message shall be in safety blue or black letters on a white background. The symbol/pictorial panel, if used, shall be square with a safety blue or black symbol on a white background.

e. **GENERAL SAFETY SIGNS**: General safety signs should conform to the following requirements:

(1) General safety signs may be used to indicate general instructions relative to safe work practices, remind of proper safety procedures, and indicate the location of safety equipment.

(2) They may have the signal words "**SAFETY FIRST**," "**BE CAREFUL**," "**THINK**," "**SAFETY INSTRUCTIONS**," etc. in white letters on a safety green background on a rectangular field, and this distinctive panel shall appear in the uppermost portion of this sign.

(3) The message panel shall be in safety green or black letters on a white background and the symbol/pictorial panel, if used, shall be square with a safety green or black symbol on a white background.

f. **FIRE SAFETY SIGNS:** Fire safety signs should conform to the following requirements:

(1) Fire safety signs may be used to indicate the location of emergency firefighting equipment

(2) These signs do NOT have a signal word.

(3) The message panel shall be in safety red letters on a white background in either a square or rectangular field and the symbol/pictorial panel, if used, shall be safety red on white or white on safety red.

g. **DIRECTIONAL ARROW SIGNS**: Directional arrow flow signs should conform to the following requirements:

(1) Directional arrow signs may be used to indicate the direction to emergency equipment, safety equipment, and other locations important to safety.

(2) The arrow symbol shall be in white on a black or colored background on a rectangular field and this distinctive symbol shall appear in the uppermost portion of the visual alerting device when used by itself or in conjunction with general safety or fire safety signs.

h. Color coding shall be in accordance with Table 8-2.

i. Piping systems shall be identified: it is recommended that the identification of piping systems (including pipes, fittings, valves, and pipe coverings) be in accordance with Table 8-3.

j. The RF radiation hazard-warning symbol specified in Figure 8-4 shall be used in the identification of RF radiation hazards.

k. Laser caution and warning signs shall be in accordance with ANSI Z136.1. ***See Figure 8-5 and 8-6 for examples.***

l. Ionizing radiation warning signs, labels, and signals shall contain the symbol show in Figure 8-7.

m. Vehicles or equipment that, by design, move at 25 miles per hour (mph) (1.1 meters per second (m/s)) or less on public roads shall display the slow-moving vehicle emblem specified in Figure 8-8.

08.A.06 Safety sign finishes shall be of durable materials with colors in accordance with ANSI Z 535.1.

08.A.07 Safety signs shall be so placed to alert and inform the viewer in sufficient time to take appropriate evasive actions to avoid the potential harm from the hazard. They shall be legible, non-distracting; and not hazardous in themselves. They shall be displayed with illumination or retro-reflectorization as needed for adequate legibility under normal and emergency operating conditions.

08.A.08 Each container of hazardous material shall be labeled, tagged, or marked with the identity of the material(s), appropriate hazard warnings, potential health effects, and the name and address of the manufacturer, importer, or other responsible party. ***> See 06.B.01***

a. Signs, placards, process sheets, batch tickets, operating procedures, or other written means may be used in lieu of affixing labels to stationary process containers if the alternative method identifies the containers to which it is applicable and conveys the information required above. The written information shall be readily available to employees in their work area throughout each work shift.

b. Portable containers into which hazardous material(s) are transferred from labeled containers and which are intended only for the immediate use by the employee who performs the transfer are not required to be labeled. However, there shall be a means of indicating that the hazardous material has been used in the container.

08.A.09 Signs, tags, and labels shall be located as close as safely possible to their respective hazards. Tags will be affixed by a positive means (such as wire, string, or adhesive) that prevents their loss or unintentional removal.

08.A.10 Signs, tags, and labels shall be legible and in English. When there are employees who speak a language other than

English and to whom the information is to be conveyed, the information may also be presented in their language if it is presented in English as well. ***> See 01.A.04.***

08.A.11 Signs shall be furnished with rounded or blunt corners and shall be free from sharp edges, burrs, splinters, or other sharp projections. The ends or heads of bolts or other fastening devices shall be located so that they are not a hazard. Wording shall be easily read, concise, and accurate. The sign should contain sufficient information to be understood.

08.A.12 Construction areas shall be posted with legible traffic signs at points of hazard.

08.A.13 Signs required to be seen at night shall be lighted or reflectorized.

08.A.14 Accident prevention tags (Figure 8-9) shall be used only as a temporary means of warning employees of an existing hazard, such as defective tools, equipment, and lockout. ***> See Section 12 for tagout requirements.***

08.A.15 Tags shall contain a signal word (either "**danger**" or "**caution**") and a major message (presented in either pictographs, written text, or both) to indicate the specific hazardous condition or the instruction to be communicated to the employee. The signal word shall be readable at a minimum distance of 5 feet or such greater distance as warranted by the hazard. The signal word and major message shall be understandable to all employees who may be exposed to the hazard. ***> See 08.A.05 for basic design criteria.***

08.A.16 Accident prevention tags shall be rectangular in shape and shall be no smaller than 3 in x 5 in (7.6 cm x 12.7 cm). The corners may be square cut, chamfered, or rounded.

08.A.17 Kerosene lamps and open flame pots shall not be used for or with warning signs or devices.

08.A.18 Warning signs shall be placed on unattended Government-owned floating plant and land-based heavy equipment accessible to the public and shall read "**WARNING - NO TRESPASSING US GOVERNMENT PROPERTY**."

08.B SIGNAL SYSTEMS, PERSONNEL, AND PROCEDURES

08.B.01 A standard signal system shall be used on all operations.

a. Hand signals for crane operations shall conform to ANSI/ASME B30 series. **> *See Figure 8-10.***

b. Traffic flagging procedures shall be in accordance with the DOT Federal Highway Administration's "*Manual on Uniform Traffic Control Devices for Streets and Highways*."

c. For Marine signals, see Section 19.

d. For helicopter hand signals, see Figure 8-11.

08.B.02 Standard hand signals shall be posted at the operator's position, signal control points, and other points as necessary to inform those concerned.

08.B.03 Manual (hand) signals may be used when the distance between the operator and signal person is not more than 100 ft (30.4 m). Radio, telephone, or a visual and audible electrically-operated system shall be used when the distance between operator and signal person is more than 100 ft (30.4 m) or when they cannot see each other.

08.B.04 A signal person shall be provided when the point of operation (includes area of load travel and area immediately surrounding the load placement) is not in full view of the vehicle, machine, or equipment operator; when vehicles are backed more than 100 ft (30.4 m); when terrain is hazardous; or when two or more vehicles are backing in the same area.

08.B.05 A flag person or other controls shall be provided when operations or equipment on or next to a highway create a traffic hazard. An exception shall be made only when an adequate mechanical signaling or control device is provided for safe direction of the operation.

08.B.06 Where manual (hand) signals are used, only one person shall be designated to give signals to the operator. This signal person shall be located to see the load and be clearly visible to the operator at all times.

08.B.07 Flag signaling shall be accomplished by use of red flags at least 18 in (45.7 cm) square or sign paddles. In periods of darkness, red lights shall be used.

08.B.08 High visibility vests shall be worn by flag and signal persons. **> *See Section 5.A.11.***

08.B.09 Signal systems shall be protected against unauthorized use, breakage, weather, or interference: any malfunction shall be cause to stop all work.

08.B.10 Only persons who are competent and qualified by experience and/or training with the operations being directed shall be used as signal persons.

08.B.11 Signal persons shall back one vehicle at a time. While under control of a signal person, the driver shall not back or maneuver until directed, and the driver shall stop when visual contact with the signal person is lost.

08.B.12 The signal person shall have a warning device of clear range and penetrating sound to warn persons when the load is coming in so they have time to get in the clear.

08.C TRAFFIC CONTROL

08.C.01 Traffic control shall be accomplished in accordance with DOT Federal Highway Administration's "*Manual on Uniform Traffic Control Devices for Streets and Highways.*"

08.C.02 The Contractor shall conduct his/her operations in such a manner as to offer the least possible obstruction to the safe and satisfactory movement of traffic over the existing roads during the life of the contract.

08.C.03 The Contractor shall be responsible for providing, erecting, maintaining, and removal of all traffic signs, barricades, and other traffic control devices necessary for maintenance of traffic.

08.C.04 All barricades, warning signs, lights, temporary signals, other devices, flagmen, and signaling devices shall meet or exceed the minimum requirements of the local DOT requirements.

08.C.05 Prior to the commencement of construction operations the Contractor shall submit for acceptance the complete details of the proposed traffic control plan for the maintenance of traffic and access through the construction area.

08.C.06 The Contractor shall coordinate with the GDA and obtain approval from local authorities prior to closing or restricting any roads.

08.C.07 Barricades, danger, warning and detour signs, as required, shall be erected before any roads are closed.

08.D HAUL ROADS

08.D.01 Access/haul roads shall be designed in accordance with current engineering criteria. Prior to construction, the Contractor shall provide the GDA with a copy of the plan for review and acceptance. Work on the haul road shall not commence until the

GDA has accepted the plan. The plan shall address the following items:

a. Equipment usage, traffic density, and hours of operation;

b. Road layout and widths, horizontal and vertical curve data, and sight distances;

c. Sign and signalperson requirements, road markings, and traffic control devices;

d. Drainage controls;

e. Points of contact between vehicles and the public, and safety controls at these points of contact;

f. Maintenance requirements, including roadway hardness and smoothness and dust control; and

g. Hazards adjacent to the road such as bodies of water, steep embankments, etc.

08.D.02 No employer shall move, or cause to be moved, any equipment or vehicle upon an access or haul road unless the roadway is constructed and maintained to safely accommodate the movement of the equipment or vehicle involved.

08.D.03 When road levels are above working levels, berms, barricades, or curbs shall be constructed to prevent vehicles overrunning the edge or end of embankment. Berms/curbs shall be constructed to one-half the diameter of the tires of the largest piece of equipment using the roadway.

08.D.04 Roadways shall have a crown and ditches for drainage. Water shall be intercepted before reaching a switch back or large fill and be led off.

08.D.05 Haul roads shall be constructed to widths suitable for safe operation of the equipment at the travel speeds proposed by the Contractor and accepted by the GDA.

08.D.06 All roads, including haul roads, shall be posted with maximum speed limits.

08.D.07 An adequate number of turn-outs shall be provided on single lane roads haul roads with two-way traffic. When turn-outs are not practical, the Contractor shall provide a traffic control system to prevent accidents.

08.D.08 Whenever possible, use a right-hand traffic pattern on two-way haul roads.

08.D.09 Curves.

a. All curves shall have open sight line and as great a radius as practical.

b. Vehicle speed shall be limited on curves so that vehicles can be stopped within one-half the visible distance of the roadway.

c. The design of horizontal curves shall consider vehicle speed, roadway width and surfacing, and super elevation.

08.D.10 Grades.

a. When necessary, based on grade and machine and load weight, machines shall be equipped with retarders to assist in controlling downgrade descent.

b. Truck haul roads should be kept to less than a10% grade. There should be no more than 400 ft (121.9 m) of grade exceeding 10%.

c. The maximum allowable grade shall not exceed 12% .

08.D.11 Lighting shall be provided as necessary.

08.D.12 Traffic control lights, barricades, road markings, signs, and signalpersons for the safe movement of traffic shall be provided in accordance with the DOT Federal Highway Administration's "*Manual on Uniform Traffic Control Devices*" and this Section.

08.D.13 Roadway hardness, smoothness, and dust control shall be used to maintain the safety of the roadway.

08.D.14 All roads shall be maintained in a safe condition and eliminate or control dust, ice, and similar hazards.

08.D.15 The deposition of mud and or other debris on public roads shall be minimized to the extent possible and in accordance with local requirements.

FIGURE 8-1

SIGN AND TAG SIGNAL WORD HEADINGS

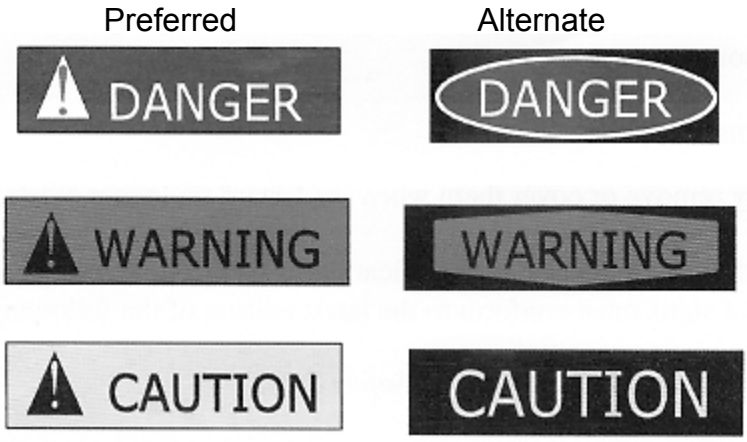

FIGURE 8-2

EXAMPLE TAG LAYOUT

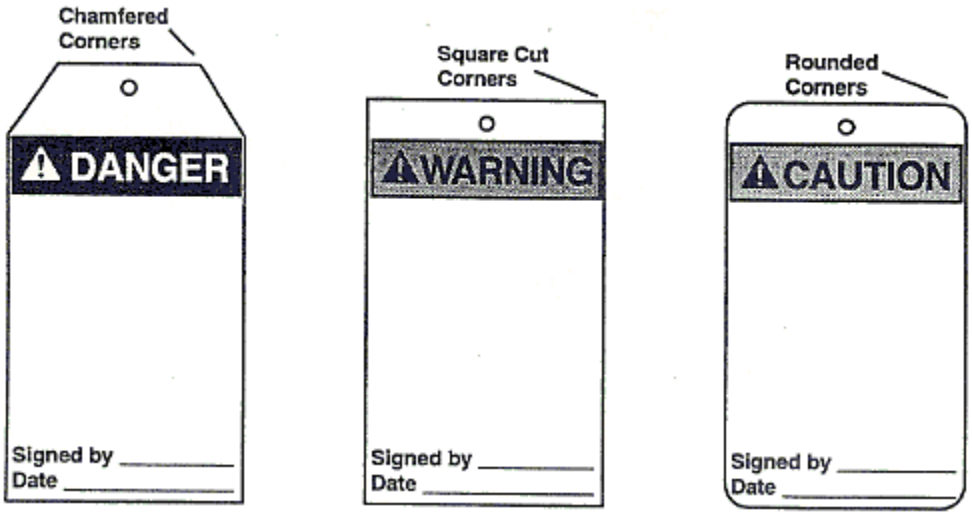

FIGURE 8-3

EXAMPLE SIGN LAYOUT

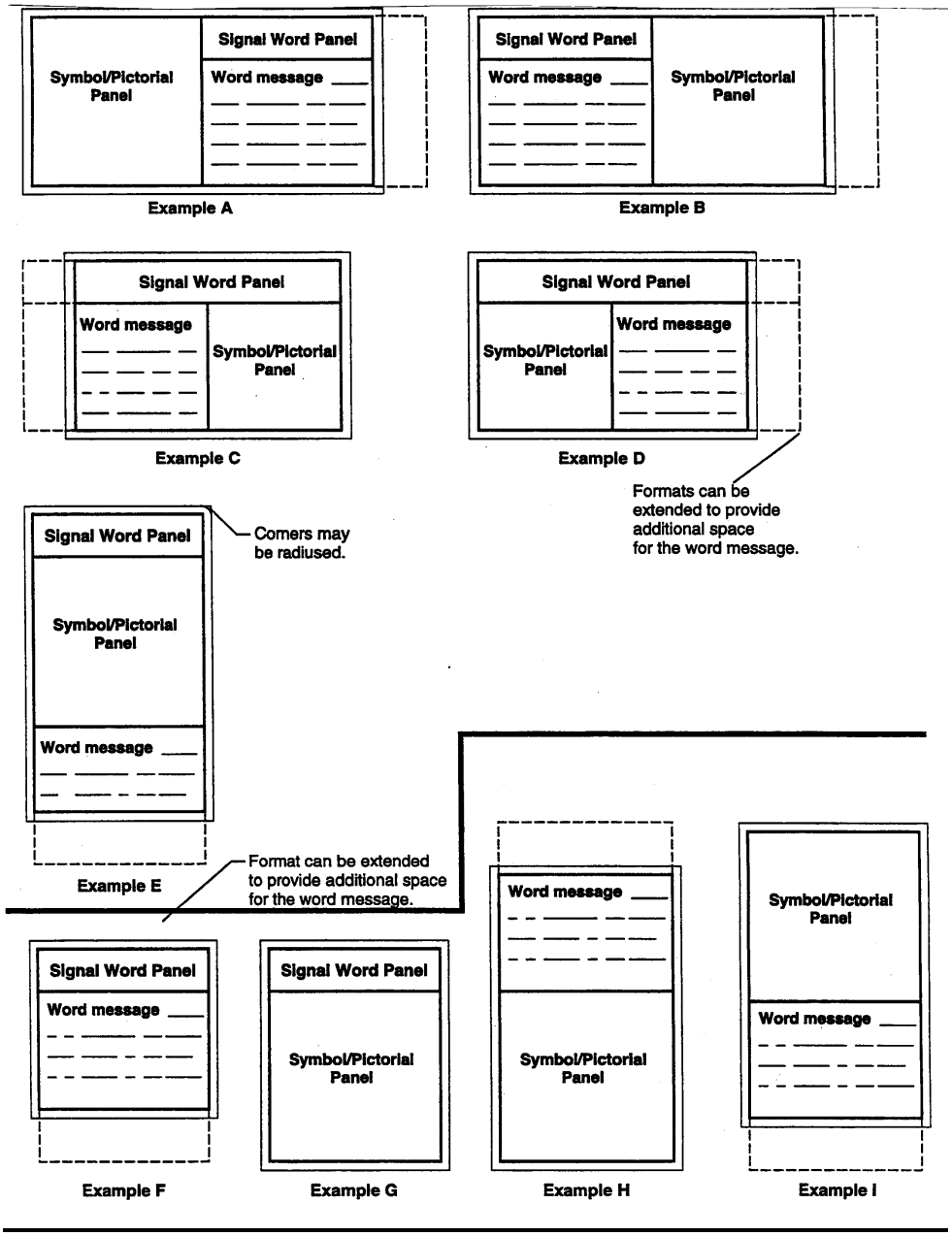

TABLE 8-1

ACCIDENT PREVENTION SIGN REQUIREMENTS

TYPE	PURPOSE	DESIGN
DANGER	Indicates a specific immediate and grave danger, a hazard capable of producing irreversible damage or injury, and prohibition against harmful activity.	Layout as shown in Fig 8-1. Shall have the word "DANGER" in white within a red oval outlines in white on a black rectangular background in the upper panel and a lower panel for additional wording or symbols in black or red on white for additional wording or symbols in black or red on a white background.
CAUTION	Call attention to a specific potential hazard capable of resulting in severe, but not irreversible, injury or damage.	Layout as shown in Fig 8-1. Shall have the word "CAUTION" in yellow on a black background and a lower panel for additional sign wording in black on a yellow background.
GENERAL SAFETY	Includes notices of general practice and rules relating to health, first aid, medical equipment, sanitation, housekeeping, and general safety.	Layout as shown in Fig 8-1 or consisting of a single panel. Shall have the appropriate keyword as the signal word in white on a green background in the upper panel and a lower panel for additional sign wording or symbols in black or green on a white background. Alternatively, the entire sign may be white letters on a green background.
FIRE AND EMERGENCY	Used only to label or points the way to fire extinguishing equipment, fires escapes and exits, gas shutoff valves, sprinkler drains, and emergency procedures.	Layout as shown in Fig 8-1 or consisting of a single red panel. Shall have the appropriate keyword as the signal word in white on a red background in the upper panel and a lower panel for additional sign wording or symbols in red on a white background. Alternatively, the entire sign may be white letters on a red background.
INFORMATION	Provide information of a general nature, such as designation of facilities or services, in order to avoid confusion or misunderstanding.	Layout as shown in Fig 8-1 or consisting of a single panel. Should have the signal word "NOTICE" in white on a blue background in the upper panel and a lower panel for additional wording or symbols in blue or black on a white background. Alternatively, the entire sign may be in white letters on a blue background.
EXIT	Used to indicate exits.	Lettered in legible letters, not less than 6 in (15.2 cm) high, on a white field. The principal stroke of the letters shall be at least 3/4 in (5.1 cm) in width.

TABLE 8-2

ACCIDENT PREVENTION COLOR CODING

COLOR	PURPOSE
Red	Red shall be the color used for identifying dangerous conditions, emergency controls, fire detection equipment and fire suppression systems, and containers of flammable liquids.
Orange	Orange shall be the color used for designating dangerous parts of machines and energized equipment.
Yellow	Yellow shall be the color for designating conditions requiring caution, marking dangerous chemicals, marking physical hazards, and markings for ionizing radiation.
Green	Green shall be the color for designating safety equipment and operator devices and the location of first-aid and safety equipment (other than firefighting equipment).
Blue	Blue shall be the color used for designating information of a non-safety nature.
Purple	Purple shall be the color used to designate ionizing radiation hazards.

TABLE 8-3

IDENTIFICATION OF PIPING SYSTEMS

Outside diameter of pipe or covering	Length of color field "A"	Size of letters "B"
3/4 to 1 1/4 inches	8 inches	1/2 inch
1 1/2 to 2 inches	8 inches	3/4 inch
2 1/2 to 6 inches	12 inches	1 1/4 inch
8 to 10 inches	24 inches	2 1/2 inch
over 10 inches	32 inches	2 1/2 inch

FIGURE 8-4

RADIO FREQUENCY WARNING SYMBOL

D = scaling unit

Lettering: ratio of letter height to thickness of letter lines

Upper triangle:	5 to 1 = large
	6 to 1 = medium
Lower triangle:	4 to 1 = small
	6 to 1 = medium

Symbol is square, triangles are right-angle isosceles

FIGURE 8-5

LASER CAUTION SIGN

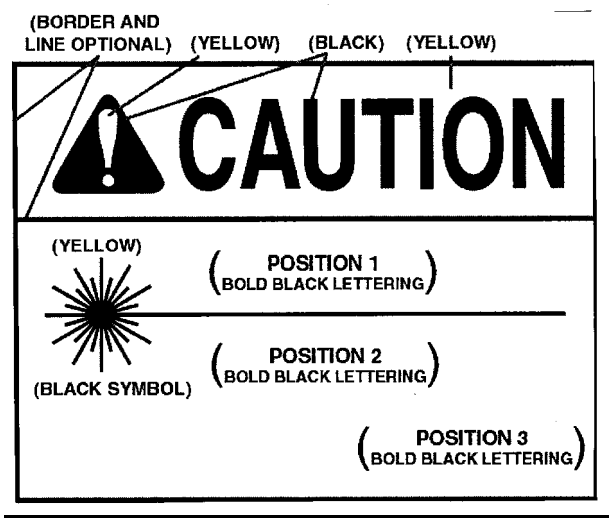

FIGURE 8-6

LASER WARNING SIGN

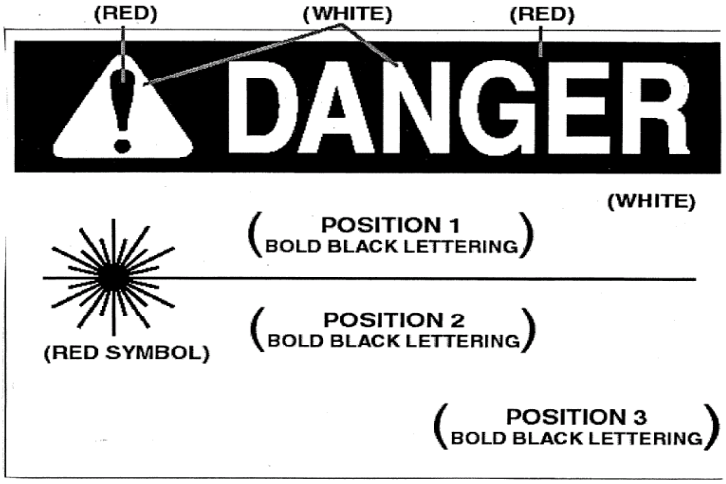

FIGURE 8-7

RADIOLOGICAL WARNING SYMBOL

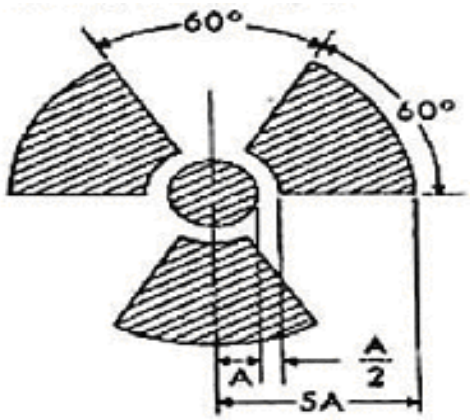

1. Cross-hatched area is to be magenta or purple.
2. Background is to be yellow.

FIGURE 8-8

SLOW-MOVING VEHICLE EMBLEM

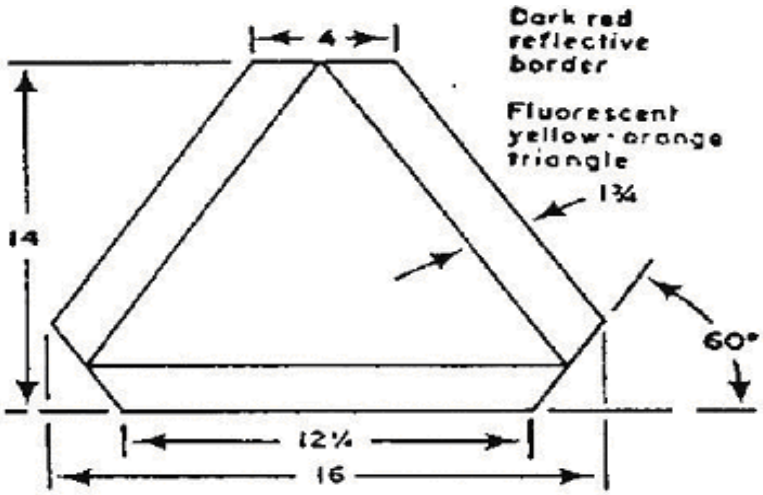

NOTE: All dimensions are in inches

FIGURE 8-9

ACCIDENT PREVENTION TAGS

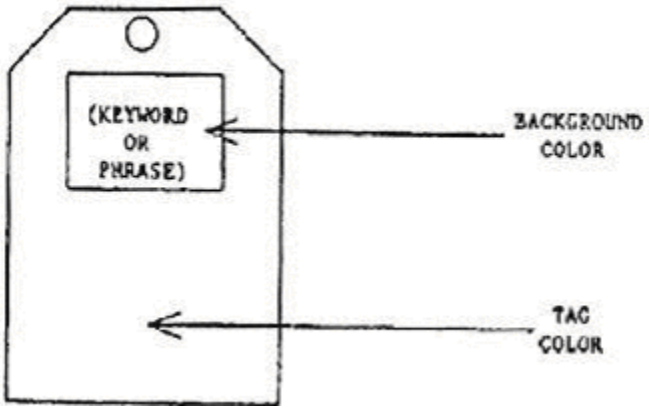

Keyword/Phrase	Keyword/Phrase Print Color	Background Color	Tag Color
“DANGER”	White in red oval	Black	White
“CAUTION”	Yellow	Black	Yellow
“DO NOT OPERATE	White	Red	White
“OUT OF ORDER”	White	Black	White
“DO NOT USE”			
Informational message or inspection	Black or green	N/A	Green or white White or black

FIGURE 8-10

CRANE HAND SIGNALS

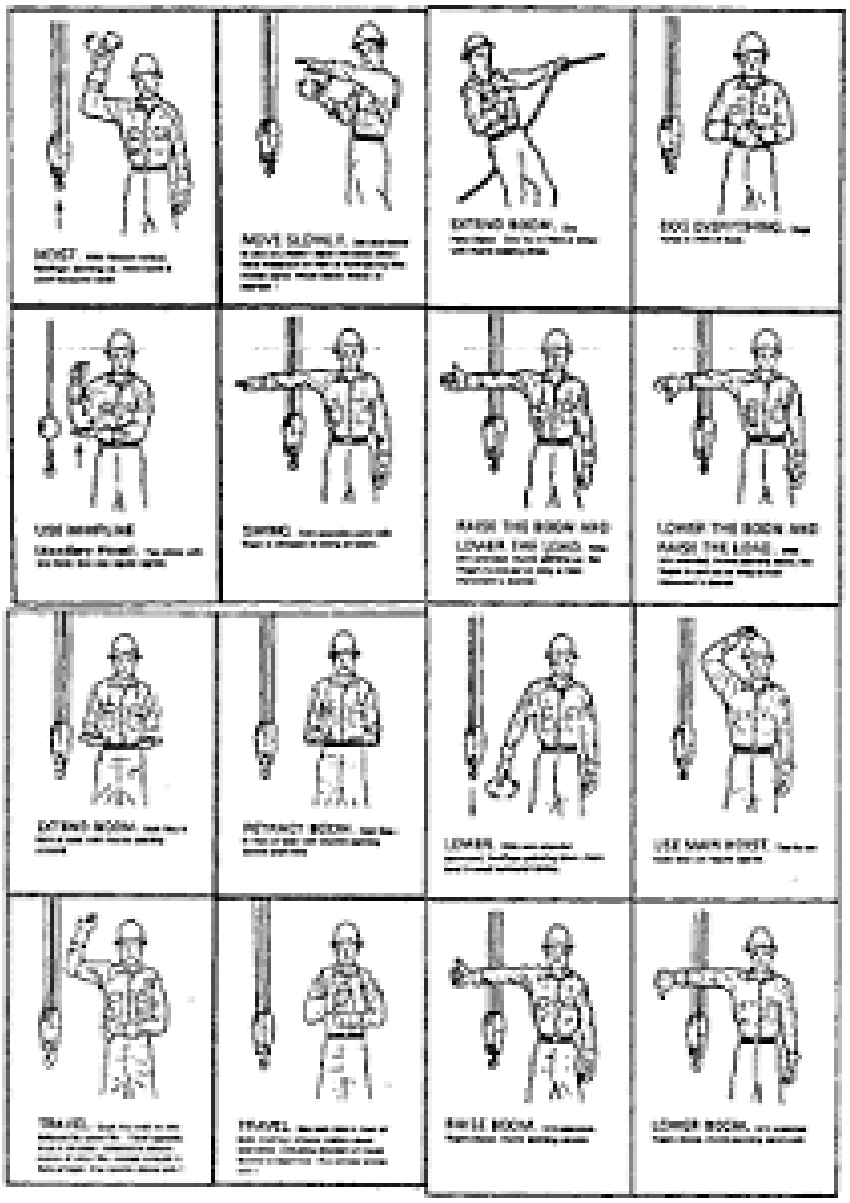

FIGURE 8-10, continued

CRANE HAND SIGNALS

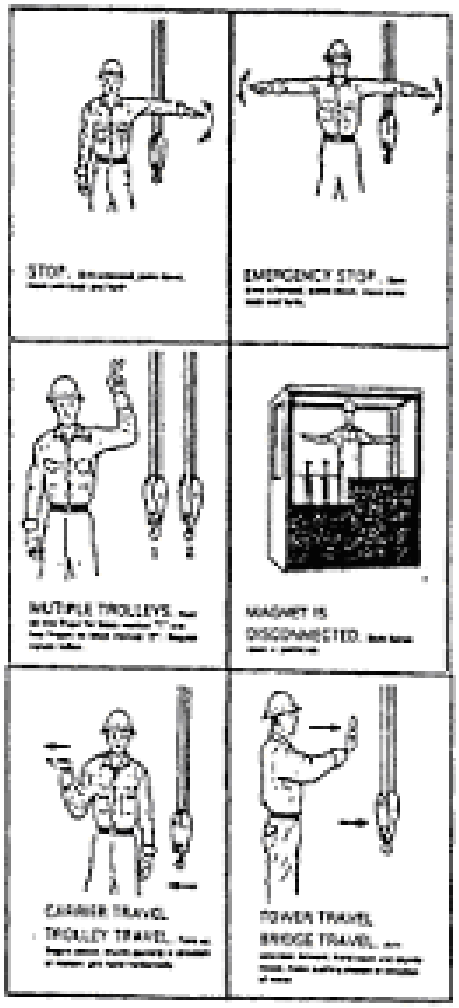

NOTE: Crane signals taken from ANSI/ASME B30 series standards with permission of ASME.

FIGURE 8-11

HELICOPTER HAND SIGNALS

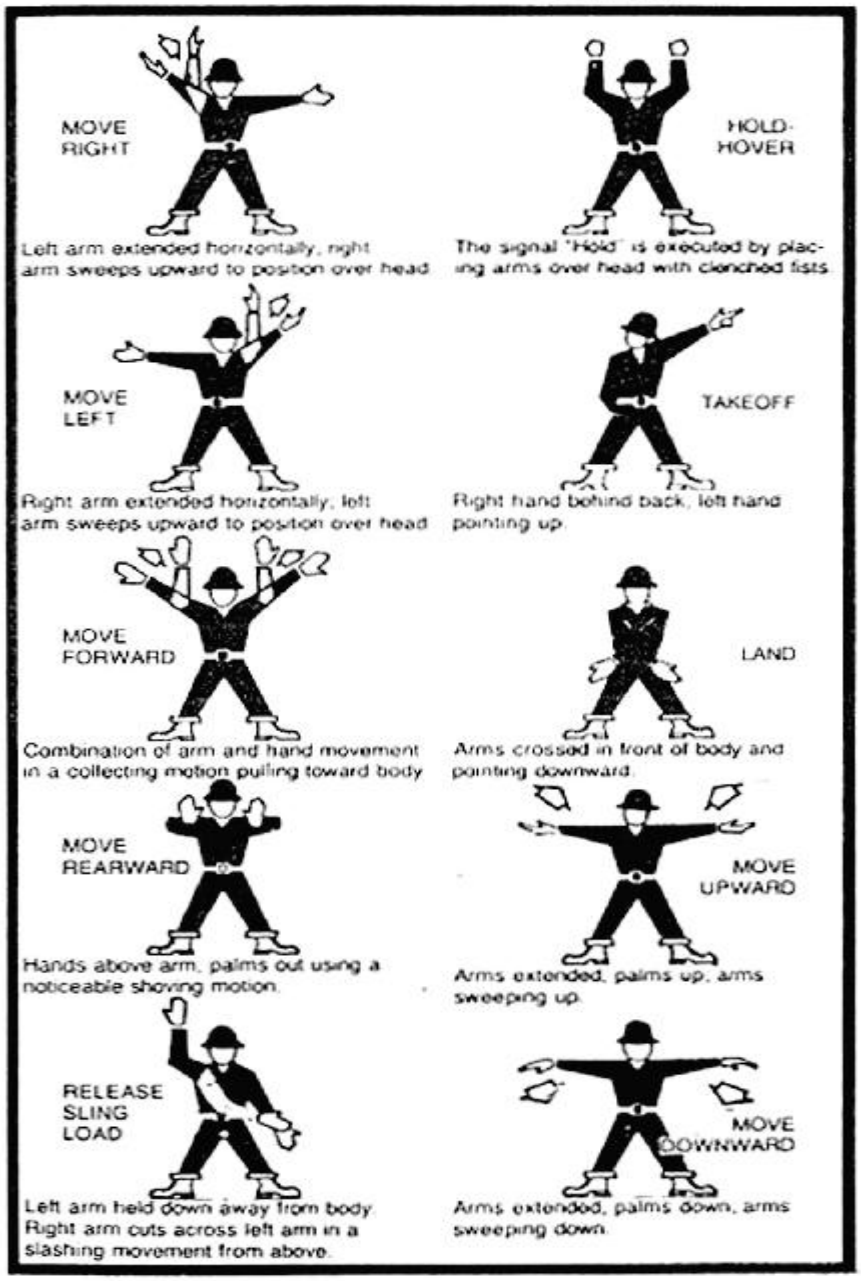

SECTION 9

FIRE PREVENTION AND PROTECTION

09.A GENERAL

09.A.01 A fire prevention plan shall be written for facilities and project sites. It shall include a list of the major workplace fire hazards; potential ignition sources; the types of fire suppression equipment or systems appropriate to the control of fire; assignments of responsibilities for maintaining the equipment and systems; personnel responsible for controlling the fuel source hazards; and housekeeping procedures, including the removal of waste materials. It shall be used to brief employees and emergency first responders on the fire hazards, the materials and processes to which they are exposed, and the emergency evacuation procedures. **> For Construction operations see NFPA 241; for Marine operations see 19.A.04.**

09.A.02 An annual survey of the suitability and effectiveness of fire prevention and protection measures and facilities at each project or installation shall be made by a qualified person. Records of the survey findings and recommendations shall be retained on file at the project or installation.

09.A.03 When unusual fire hazards exist or fire emergencies develop, additional protection shall be provided as required by the GDA.

09.A.04 The GDA shall survey all activities and determine which require a hot work permit.

09.A.05 Fires and open flame devices shall not be left unattended.

09.A.06 All sources of ignition shall be prohibited within 50 ft (15.2 m) of operations with a potential fire hazard. The area shall be conspicuously and legibly posted "**NO SMOKING, MATCHES, OR OPEN FLAME**."

09.A.07 Smoking shall be prohibited in all areas where flammable, combustible, or oxidizing materials are stored. "**NO SMOKING, MATCHES, OR OPEN FLAME**" signs will be posted in all prohibited areas.

09.A.08 Areas where there is danger of underground fire shall not be used for the storage of flammable or combustible materials.

09.A.09 A barrier having a fire resistance rating equivalent to a listing of at least 1 hour shall segregate DOT-identified noncompatible materials that may create a fire hazard. For compressed gas cylinders see Section 20.D.

09.A.10 A good housekeeping program that provides for the prompt removal and disposal of accumulations of combustible scrap and debris shall be implemented on the site. Self-closing containers shall be used to collect waste saturated with flammable or combustible liquids. Only non-combustible or UL labeled nonmetallic containers may be used to dispose of waste and rubbish.

09.A.11 Measures must be taken to control the growth of tall grass, brush, and weeds adjacent to facilities. A break of at least 3 ft (0.9 m) shall be maintained around all facilities.

09.A.12 Paint-soiled clothing and drop cloths, when not in use, shall be stored in well-ventilated steel cabinets or containers.

09.A.13 Insulating material with a combustible vapor barrier shall be stored at least 25 ft (7.6 m) from buildings or structures. Only the quantity required for one day's use shall be permitted in buildings under construction.

09.A.14 Disposal of combustible waste materials shall be in compliance with applicable fire and environmental laws and regulations.

09.A.15 Burning operations.

a. Burning areas shall be established in coordination with the GDA and with the agency responsible for monitoring fire potential at the location of the proposed burning area.

b. Burning operations shall be in compliance with Federal, State, and local regulations and guidelines.

c. A sufficient force to control and patrol the burning operations shall be maintained until the last embers have been extinguished.

d. Bump blocks shall be provided where trucks back to a fire or burning pit.

e. Prescribed burning activities for natural resource management shall be conducted in accordance with guidelines set forth in Section 09.K.

09.A.16 Low-density fiberboard, combustible insulation, or vapor barriers with a flame spread rating greater than 25 shall not be installed in permanent buildings.

09.A.17 Temporary enclosures shall be covered with flame-resistant tarpaulins or material of equivalent fire-resistant characteristics.

09.A.18 When outside help is relied upon for fire protection, a written agreement shall be made, or a memorandum of record, stating the terms of the arrangement and the details for fire protection services, and shall be provided to the GDA.

09.A.19 Temporary building spacing shall be as follows:

a. The minimum space between one-story non-fire-resistive buildings shall be 20 ft (6 m).

b. The minimum space between two-story non fire-resistive buildings shall be 25 ft (7.6 m).

c. Buildings other than non fire-resistive buildings shall comply with recommendations of the NFPA.

(A group of buildings in which the total ground floor area does not exceed 2,000 ft^2 (185.8 m^2) shall be considered as one building for the above purpose. However, each building in the group shall be horizontally separated by at least 10 ft (3 m) on each side from other buildings.)

09.A.20 Fire lanes providing access to all areas shall be established and maintained free of obstruction.

09.A.21 Vehicles, equipment, materials, and supplies shall not be placed so that access to fire hydrants and other fire fighting equipment is obstructed.

09.A.22 Hazardous locations.

a. Electrical lighting shall be the only means of artificial illumination in areas where flammable liquids, vapors, fumes, dust, or gases are present.

b. All electrical equipment and installations in hazardous locations shall be in accordance with the National Electrical Code (NEC) for hazardous locations.

c. Globes or lamps shall not be removed or replaced nor shall repairs be made on the electrical circuit until it has been de-energized.

09.A.23 Clearance shall be maintained around lights and heating units to prevent ignition of combustible materials.

09.A.24 All combustibles shall be shielded from the flames of torches used to cut or sweat pipe.

09.A.25 Precautions shall be taken to protect formwork and scaffolding from exposure to, and spread of, fire.

09.A.26 Fire protection in the construction process.

a. Fire cut-offs shall be retained in buildings undergoing alterations or demolition until operations require their removal.

b. Where a water distribution system is required for the protection of buildings or other structures, water mains and hydrants shall be installed before or concurrent with the construction of facilities. Until the permanent system is in operation, an equivalent temporary system shall be provided.

c. Permanent (fixed) extinguishing equipment and water supply for fire protection shall be installed and in operable condition as soon as possible. The scheduling of sprinkler installation shall closely follow the building construction and, following completion of each story, shall be placed in service as soon as laws permit.

d. During demolition or alterations, existing automatic sprinkler systems shall be retained in service as long as reasonable. Modification of sprinkler systems to permit alterations or additional demolition should be expedited so that the system may be returned to service as quickly as possible. Sprinkler control valves shall be checked daily at close of work to ascertain that the protection is in service. The operation of sprinkler control valves is permitted only when approved by the GDA.

e. During the construction process, the construction of fire walls and exit stairways required for completed buildings shall have priority; fire doors, with automatic closing devices, shall be hung on openings as soon as practical.

09.A.27 Water supply and distribution facilities for fire fighting shall be provided and maintained in accordance with recommendations of NFPA or regulations of USCG.

09.A.28 Recommendations of NFPA and regulations of the USCG shall be complied with in situations not covered in this section. Where local building codes are established, the more stringent requirements shall apply.

09.B FLAMMABLE AND COMBUSTIBLE LIQUIDS

09.B.01 All storage, handling, and use of flammable and combustible liquids shall be in accordance with NFPA 30, NFPA 30A, or other applicable standards under the supervision of a qualified person.

09.B.02 All sources of ignition shall be prohibited in areas where flammable and combustible liquids are stored, handled, and processed. Suitable **NO SMOKING, MATCHES, OR OPEN FLAME** signs shall be posted in all such areas.

09.B.03 Fire protection requirements.

a. At least one portable fire extinguisher rated 20-B:C shall be provided on all tank trucks or other vehicles used for transporting and/or dispensing flammable or combustible liquids.

b. Each service or refueling area shall be provided with at least one fire extinguisher rated not less than 40-B:C and located so that an extinguisher shall be within 100 ft (30.4 m) of each pump, dispenser, underground fill pipe opening, and lubrication or service area.

09.B.04 Flammable liquids shall be kept in closed containers or tanks when not in use.

09.B.05 Workers shall guard carefully against any part of their clothing becoming contaminated with flammable or combustible fluids. They shall not be allowed to continue work if their clothing becomes contaminated, and they must remove or wet down the clothing as soon as possible.

09.B.06 No flammable liquid with a flash point (closed cup test) below 100 °F (37.7 °C) shall be used for cleaning purposes or to start or rekindle fires.

09.B.07 Ventilation adequate to prevent the accumulation of flammable vapors to hazardous levels shall be provided in all areas where flammable and combustible liquids are handled or used.

09.B.08 Only labeled/listed (by a nationally-recognized testing laboratory) containers and portable tanks shall be used for the storage of flammable and combustible liquids.

a. Metal containers and portable tanks (less than 660 gal (2.4 m^3) individual capacity) meeting the requirements of, and containing products authorized by, Chapter I, 49 CFR (U.S. DOT Hazardous Materials Regulations), Chapter 9 of the United Nations' *"Recommendations on the Transport of Dangerous Goods,"* or NFPA 386 shall be acceptable.

b. Plastic containers meeting the requirements of, and used for petroleum products within the scope of, one or more of the following specifications shall be acceptable: ASTM F852, ASTM F 76, and ANSI/UL 1313.

c. Plastic drums meeting the requirements of and containing products authorized by 49 CFR or by Chapter 9 of the United Nations' *"Recommendations on the Transport of Dangerous Goods"* shall be acceptable.

d. Fiber drums that meet the requirements of Item 296 of the National Motor Freight Classification (NMFC) or Rule 51 of the Uniform Freight Classification (UFC) for Types 2A, 3A, 3B-H, 3B-L, or 4A and meet the requirements of and contain liquid products authorized either by Chapter I, 49 CFR (U.S. DOT Hazardous Materials Regulations) or by DOT exemption shall be acceptable.

09.B.09 Portable tanks (less than 660 gal (2.4 m^3) individual capacity) shall be provided with one or more devices installed in the top with sufficient emergency venting capacity to limit internal pressure under fire exposure conditions to 10 pounds per square inch (psi) (68.9 kilopascal (kPa)) gauge or 30% of the bursting pressure of the portable tank, whichever is greater.

a. At least one pressure-actuated vent having a minimum capacity of 6000 ft^3 (170 m^3) of free air per hour shall be used. It shall be set to open at not more than 5 psi (35 kPa) gauge.

b. If fusible vents are used, they shall be actuated by elements that operate at a temperature not exceeding 300 °F (148.8 °C).

c. Where plugging of a pressure-actuated vent can occur, fusible plugs or venting devices that soften to failure at a maximum of 300 °F (148.8 °C) under fire exposure shall be permitted to be used for the entire emergency venting requirement.

09.B.10 The design, construction, and use of storage tanks shall be as specified in NFPA 30.

09.B.11 The maximum allowable size for a container or metal portable tank (less than 660 gal (2.4 m^3) individual capacity) shall not exceed the those shown in Table 9-1:

09.B.12 The design, construction, and use of storage cabinets, indoor storage areas, outdoor storage areas, hazardous materials storage lockers, and other occupancies shall be in accordance with NFPA 30 or, for marine applications, 46 CFR 147 covers use of cabinets and 46 CFR 92.05-10 specifies design and construction.

09.B.13 Flammable and combustible liquids in quantities greater than that required for 1 day's use shall not be stored in buildings under construction and not more than a 2-day supply shall be stored on paint barges.

TABLE 9-1

MAXIMUM ALLOWABLE SIZE OF CONTAINERS AND TANKS FOR FLAMMABLE AND COMBUSTIBLE LIQUIDS

Container type	Flammable Liquids Class			Combustible Liquids Class	
	IA	IB	IC	II	III
Glass	16 oz (473 mL)	32 oz (946 mL)	1gal (3.8 L)	1 gal (3.8 L)	1 gal (3.8 L)
Metal (other than DOT drums) or approved plastic)	1 gal (3.8 L)	5 gal (19 L)	5 gal (19 L)	5 gal (19 L)	5 gal (19 L)
Safety cans	2 gal (7.6 L)	5 gal (19 L)	5 gal (19 L)	5 gal (19 L)	5 gal (19 L)
Metal drum (DOT) specification	8.1 ft^3 (0.23 m^3)	8.1 ft^3 (0.23 m^3)	8.1 ft^3 (0.23 m^3)	8.1 ft^3 (0.23 m^3)	8.1 ft^3 (0.23 m^3)
Approved metal portable tank	88.3 ft^3 (2.5 m^3)	88.3 ft^3 (2.5 m^3)	88.3 ft^3 (2.5 m^3)	88.3 ft^3 (2.5 m^3)	88.3 ft^3 (2.5 m^3)
Polyethylene DOT Spec 34, UN 1H1, or as authorized by DOT Exemption	1 gal (3.8 L)	5 gal (19 L)	5 gal (19 L)	8.1 ft^3 (0.23 m^3)	8.1 ft^3 (0.23 m^3)
Fiber drum NMFC or UFC Type 2A, Types 3A, 3B-H, or 3B-L, or Type 4A				8.1 ft^3 (0.23 m^3)	8.1 ft^3 (0.23 m^3)

09.B.14 Flammable and combustible liquids shall not be stored in areas used for exits, stairways, or safe passage of people.

09.B.15 Safety cans and other portable containers for flammable liquids having a flash point at or below 73 °F (23 °C) shall be labeled/listed and painted red with a yellow band around the can and the name of the contents legibly indicated on the container.

09.B.16 Unopened containers of flammable and combustible liquids, such as paints, varnishes, lacquers, thinners, and solvents, shall be kept in a well ventilated location, free of excessive heat, smoke, sparks, flame, or direct rays of the sun.

09.B.17 In areas where flammable and combustible liquids are handled or stored, a self-closing metal refuse can, listed by a nationally recognized testing laboratory, shall be provided and maintained in good condition.

09.B.18 Where liquids are used or handled, provisions shall be made to promptly and safely dispose of leakage or spills.

09.B.19 Flashlights and electric lanterns used while handling flammable and combustible liquids shall be listed by a nationally recognized testing laboratory for the intended use.

09.B.20 Dispensing flammable and combustible liquids - general.

a. All pumping equipment used for the transfer of flammable and combustible liquids shall be listed by a nationally recognized testing laboratory or approved by, and labeled or tagged in accordance with, the Federal agency having jurisdiction, such as the DOT.

b. Flammable liquid dispensing systems shall be electrically bonded and grounded. All fuel tanks, hoses, and containers of 5 gal (18.9 L) or less shall be kept in metallic contact while flammable liquids are being transferred; transfer of flammable

liquids in containers in excess of 5 gal (18.9 L) shall be done only when the containers are electrically bonded.

c. Flammable or combustible liquids shall be drawn from, or transferred into, vessels, containers, or tanks within a building or outside only through a closed piping system, from safety cans, by means of a device drawing through the top, or from a container, or portable tanks, by gravity or pump, through an approved self-closing valve. Transferring by means of air pressure on the container or portable tanks is prohibited.

d. Areas in which flammable or combustible liquids are transferred in quantities greater than 5 gal (18.9 L) from one tank or container to another shall be separated from other operations by at least 25 ft (7.6 m) or a barrier having a fire resistance of at least 1 hour. Drainage or other means shall be provided to control spills. Natural or mechanical ventilation shall be provided to maintain the concentration of flammable vapor at or below 10% of the lower flammable limit.

e. Dispensing units shall be protected against collision damage by suitable means and permanent dispensing units shall be securely bolted in place.

f. Dispensing nozzles and devices for Class I liquids shall be listed.

g. Lamps, lanterns, heating devices, small engines, and similar equipment shall not be filled while hot: these devices shall be filled only in well ventilated rooms free of open flames or in open air and shall not be filled in storage buildings.

h. Dispensing devices shall be in all cases at least 20 ft (6 m) from any activity involving fixed sources of ignition.

09.B.21 Service and refueling areas.

a. Dispensing hoses shall be listed; dispensing nozzles shall be an approved automatic-closing type without a latch-open device.

b. Equipment using Class I liquid fuel shall be shut down during refueling, servicing, or maintenance: this requirement may be waived for diesel-fueled equipment serviced by a closed system with attachments designed to prevent spillage.

c. Dispensing of flammable fluids from tanks of 55 gal (0.20 m^3) capacity or more shall be by listed pumping arrangement. Transferring by air pressure on the container or portable tank is prohibited.

d. Clearly identified and easily accessible switch(es) shall be provided at a location remote from dispensing devices to shut off the power to all dispensing devices in an emergency.

e. A listed emergency breakaway device designed to retain liquid on both sides of the breakaway point shall be installed on each hose dispensing Class I liquids.

09.B.22 Tank cars/trucks.

a. Tank cars/trucks shall be spotted and not loaded or unloaded until brakes have been set and wheels chocked.

b. Tank cars/trucks shall be attended for the entire time they are being loaded or unloaded. Precautions shall be taken against fire or other hazards.

c. Tank cars/trucks shall be properly bonded and grounded while being loaded or unloaded. Bonding and grounding connections shall be made before dome covers are removed on tank cars/trucks and shall not be disconnected until such covers have been replaced. Internal vapor pressure shall be relieved before dome covers are opened.

09.C LIQUEFIED PETROLEUM GAS (LP-GAS)

09.C.01 Storage, handling, installation, and use of LP-Gases and systems shall be in accordance with NFPA Standard 58 and USCG regulations, as applicable.

09.C.02 LP-Gas containers, valves, connectors, manifold valve assemblies, regulators, and appliances shall be of an approved type.

09.C.03 Any appliance that was originally manufactured for operation with a gaseous fuel other than LP-Gas and is in good condition may be used with LP-Gas only after it is properly converted, adapted, and tested for performance with LP-Gas.

09.C.04 Polyvinyl chloride and aluminum tubing shall not be used in LP-Gas systems.

09.C.05 Safety devices.

a. Every container and vaporizer shall be provided with one or more safety relief valves or devices. These valves and devices shall be arranged to afford free vent to the outside air and discharge at a point not less than 5 ft (1.5 m) horizontally from any building opening that is below the discharge point.

b. Container safety relief devices and regulator relief vents shall be located not less than 5 ft (1.5 m) in any direction from air openings into sealed combustion system appliances or mechanical ventilation air intakes.

c. Shut-off valves shall not be installed between the safety relief device and the container, or the equipment or piping to which the safety relief device is connected, except that a shut-off valve may be used where the arrangement of the valve is such that full required capacity-flow through the safety relief device is always afforded.

09.C.06 Container valves and accessories.

a. Valves, fittings, and accessories connected directly to the container, including primary shut off valves, shall have a rated working pressure of at least 250 psi (1723.6 kPa) gauge and shall be of material and design suitable for LP-Gas service.

b. Connections to containers (except safety relief connections, liquid level gauging devices, and plugged openings) shall have shutoff valves located as close to the container as practical.

09.C.07 Multiple container systems.

a. Valves in the assembly of multiple container systems shall be arranged so that replacement of containers can be made without shutting off the flow of gas in the system (this is not to be construed as requiring an automatic changeover device).

b. Regulators and low-pressure relief devices shall be rigidly attached to the cylinder valves, cylinders, supporting standards, building walls, or otherwise rigidly secured and shall be installed or protected from the elements.

09.C.08 LP-Gas containers and equipment shall not be used in unventilated spaces below grade in pits, below-decks, or other spaces where dangerous accumulations of heavier-than-air gas may accumulate due to leaks or equipment failure.

09.C.09 Welding is prohibited on LP-Gas containers.

09.C.10 Dispensing.

a. Equipment using LP-Gas shall be shut down during refueling operations.

b. Filling of fuel containers for motor vehicles from bulk storage containers shall be performed not less than 10 ft (3 m) from the nearest masonry-walled building, not less than 25 ft (7.6 m) from the nearest building of other construction, and, in any event, not less than 25 ft (7.6 m) from any building opening.

c. Filling, from storage containers, of portable containers or containers mounted on skids shall be performed no less than 50 ft (15.2 m) from the nearest building.

09.C.11 Installation, use, and storage outside buildings.

a. Containers shall be upright upon firm foundations or otherwise firmly secured. Flexible connections (or other special fixtures) shall be provided to protect against the possibility of the effect of settlement on the outlet piping.

b. Containers shall be in a suitable ventilated enclosure or otherwise protected against tampering.

c. Storage outside buildings, of containers awaiting use, shall be located from the nearest building or group of buildings in accordance with Table 9-2.

TABLE 9-2

LP-GAS CONTAINER AND CYLINDER OUTSIDE STORAGE MINIMUM DISTANCES

Quantity of LP-Gas stored	Distance
Less than 500 lb (227 kg)	0 ft
500 lb (227 kg) 6,000 lb (2730 kg)	10 ft (3 m)
6,000 lb (2730 kg) 10,000 lb (4545 kg)	20 ft (6 m)
More than 10,000 lb (4545 kg)	25 ft (7.6 m)

d. Storage areas shall be provided with at least one approved portable fire extinguisher rated no less than 20-B:C.

09.C.12 Use inside buildings.

a. LP-Gas shall not be stored within buildings.

b. Containers, regulating equipment, manifolds, pipe, tubing, and hose shall be located to minimize exposure to high temperatures or physical damage.

c. The maximum water capacity of individual containers shall be 245 lb (111.1 kg (nominal 100 lb (45.3 kg) LP-Gas capacity).

d. Containers having a water capacity greater than 2.5 lb (1.1 kg) (nominal 1 lb (0.4 kg) LP-Gas capacity) that are connected for use shall stand on a firm and substantially level surface and, when necessary, shall be secured in an upright position. Systems using containers having a water capacity greater than 2.5 lb (1.1 kg) shall be equipped with excess flow valves internal either with the container valves or in the connections to the container valve outlets.

e. Regulators shall be directly connected to either the container valves or to manifolds connected to the container valves. The regulator shall be suitable for use with LP-Gas. Manifolds and fittings connecting containers to pressure regulator inlets shall be designed for at least 250 psi (1723.6 kPa) gauge service pressure.

f. Valves on containers having water capacity greater than 50 lb (22.6 kg) (nominal 20 lb (9 kg) LP-Gas capacity) shall be protected from damage while in use or storage.

g. Hose shall be designed for a working pressure of at least 250 psi (1723.6 kPa) gauge. Design, construction, and performance of hose and connections shall have been suitability determined by listing by a nationally recognized testing agency. Hose length shall be as short as possible but long enough to permit compliance with spacing requirements without kinking, straining, or causing the hose to be so close to a burner as to be damaged by heat.

09.D TEMPORARY HEATING DEVICES

09.D.01 Only temporary heating devices approved by the GDA shall be used. Each heater should have a safety data plate permanently affixed by the manufacturer. The plate shall provide requirements or recommendations for:

a. Clearances from combustible materials;

b. Ventilation (minimum air requirements for fuel combustion);

c. Fuel type and input pressure;

d. Lighting, extinguishing, and relighting;

e. Electrical power supply characteristics;

f. Location, moving, and handling; and

g. Name and address of the manufacturer.

> If this information is not available on a data plate, it shall be in writing at the job site.

09.D.02 A positive operating procedure shall be established to assure the following:

a. Proper placement and servicing,

b. Safe clearance from combustible material,

c. Close surveillance,

d. Safe fuel storage and refueling,

e. Proper maintenance, and

f. Ventilation and determination of gaseous contamination or oxygen deficiency.

09.D.03 Heater installation and maintenance shall be in accordance with the manufacturer's instructions.

09.D.04 Open-flame heating devices having exposed fuel below the flame are prohibited.

09.D.05 Heaters, when in use, shall be set horizontally level, unless otherwise permitted by the manufacturer's specifications.

09.D.06 Heaters unsuitable for use on wood floors shall be so marked. When such heaters are used, they shall rest on suitable heat insulating material, such as concrete of at least 1 in (2.5 cm) thickness or equivalent; the insulating material shall extend 2 ft (0.6 m) or more in all directions from the edges of the heater.

09.D.07 Heaters used near combustible tarpaulins, canvas, or similar coverings shall be located at least 10 ft (3 m) from such coverings; coverings shall be securely fastened to prevent them from igniting or upsetting the heater due to wind action.

09.D.08 Heaters shall be protected against damage.

09.D.09 Installation of temporary heating devices shall provide minimum clearances to combustible materials as specified in Table 9-3.

TABLE 9-3

TEMPORARY HEATING DEVICE CLEARANCES

Heater type	Sides	Rear	Chimney connector
Room heater – circulating	11.8 in (30 cm)	11.8 in (30 cm)	17.7 in (45 cm)
Room heater – radiant	35.4 in (90 cm)	35.4 in (90 cm)	17.7 in (45 cm)

09.D.10 Fuel combustion space heating devices used in any enclosed building, room, or structure shall be vented by a flue pipe to the exterior of the structure.

a. Fresh air shall be supplied, by natural or mechanical means, in sufficient quantities to ensure the health and safety of

workers. Particular attention shall be given to areas where heat and fumes may accumulate.

b. When heaters are used in confined spaces, precautions shall be taken to ensure proper combustion, maintenance of a safe and healthful atmosphere for workers, and limitation of temperature rise in the area. These precautions shall be addressed in the confined space entry permit. **>** ***See 06.I.***

c. Vent pipes shall be located a safe distance from flammables and combustibles. Where vent pipes pass through combustible walls or roofs, they shall be properly insulated and securely fastened and supported to prevent accidental displacement or separation.

09.D.11 When a heater is placed in operation, initial and periodic checks shall be made to ensure it is functioning properly.

09.D.12 Fuel combustion heater CO hazards.

a. When heaters are used in enclosed or partially enclosed structures, CO shall be continuously monitored; or tests for the presence of CO shall be made within 1 hour of the start of each shift and at least every 4 hours (every 2 hours for solid fuel heaters) thereafter.

b. CO concentrations greater than 25 ppm (TLV) of air volume at worker breathing levels shall require extinguishing of the heater unless additional ventilation is provided to reduce the CO content to acceptable limits.

09.D.13 Personnel involved in fueling heaters shall be trained in, and thoroughly familiar with, the manufacturer's recommended safe fueling procedures.

09.D.14 Heaters shall be equipped with an approved automatic device to shut off the flow of fuel if the flame is extinguished (on liquid fuel heaters, barometric or gravity oil feed shall not be considered a primary safety control).

09.D.15 Spark arresters shall be provided on all smoke stacks or burning devices having forced drafts or short stacks permitting live sparks or hot materials to escape.

09.D.16 Solid fuel heaters are prohibited in buildings and on scaffolds.

09.D.17 Gas heaters - general.

a. All piping, tubing, and hose shall be leak tested using soap suds or other noncombustible detection means (tests shall not be made with a flame) after assembly and proven free of leaks at normal operating pressure.

b. Hose and fittings shall be protected from damage and deterioration.

c. All hose and fittings shall be checked to ensure that the type, capacity, and pressure ratings are as specified by the heater manufacturer: hose shall have a minimum working pressure or 250 psi (1723.6 kPa) gauge and a minimum bursting pressure of 1250 psi (8618.4 kPa) gauge.

d. All hose connectors shall be capable of withstanding, without leakage, a test pressure of 125 psi (861.8 kPa) gauge and shall be capable of withstanding a pull test of 400 lb (181.4 kg).

e. Hose connectors shall be securely connected to the heater by mechanical means. Neither "slip-end" connectors (connections that allow the hose end to be held only by the friction of the hose material against the metal fitting of the unit) nor ring keepers (tightened over the hose to provide an increased force holding the hose to the metal fitting) are permitted.

09.D.18 Natural gas heaters. When flexible gas supply lines are used, the length shall be as short as practical and shall not exceed 25 ft (7.6 m).

09.D.19 Portable LP-Gas heaters. **> *See also 09.C.***

a. If LP-Gas is supplied to a heater by hose, the hose shall not be less than 10 ft (3 m), nor more than 25 ft (7.6 m), in length.

b. Heaters shall be equipped with an approved regulator in the supply line between the fuel cylinder and the heater unit. Cylinder connectors shall be provided with an excess flow valve to minimize the flow of gas in the event the fuel line ruptures.

c. LP-Gas heaters having inputs above 50,000 British thermal unit (Btu) per hour shall be equipped with either a pilot, which must be lighted and proved before the main burner can be turned on, or an electronic ignition. (These provisions do not apply to portable heaters under 7,500 Btu per hour when used with containers having a maximum water capacity of 2.5 lb (1.1 kg).)

d. Container valves, connectors, regulators, manifolds, piping, and tubing shall not be used as structural support for LP-Gas heaters.

e. Heaters, other than integral heater-container units, shall be located at least 6 ft (1.8 m) from any LP-Gas container (this shall not prohibit the use of heaters designed specifically for attachment to the LP-Gas container or to a supporting standard, provided they are designed and installed to prevent direct or radiant heat application from the heater into the containers). Blower and radiant type heaters shall not be directed toward any LP-Gas container within 20 ft (6 m).

f. If two or more heater-container units (of either the integral or non-integral type) are located in an unpartitioned area of the same floor, the container or containers of each unit shall be separated from the container or containers of any other unit by at least 20 ft (6 m).

g. When heaters are connected to containers for use in an unpartitioned area on the same floor, the total water capacity of

containers, manifolded together for connection to a heater(s), shall not be greater than 735 lb (333.3 kg) (nominal 300 lb (136 kg) LP-Gas capacity). Such manifolds shall be separated by at least 20 ft (6 m).

09.D.20 Installation of heating equipment in service or lubrication areas.

a. Heating equipment installed in lubrication or service areas where there is no dispensing or transferring of flammable liquids shall be installed such that the bottom of the heating unit is at least 18 in (45.7 cm) above the floor and is protected from damage.

b. Heating equipment installed in lubrication or service areas where flammable liquids are dispensed shall be of a type approved for garages and shall be installed at least 8 ft (2.4 m) above the floor.

09.E FIRST RESPONSE FIRE PROTECTION

09.E.01 Portable fire extinguishers shall be provided where needed as specified in Table 9-4. Fire extinguishers shall be inspected monthly and maintained as specified in NFPA 10. Records shall be kept on a tag or label attached to the extinguisher, on an inspection check list maintained on file, or by an electronic method that provides a permanent record. The date the inspection was performed and the initials of the person performing the inspection shall be recorded.

09.E.02 Approved fire extinguishers.

a. Fire extinguishers shall be approved by a nationally recognized testing laboratory and labeled to identify the listing and labeling organization and the fire test and performance standard that the fire extinguisher meets or exceeds.

TABLE 9-4

FIRE EXTINGUISHER DISTRIBUTION

	Occupancy					
	Low Hazard		Medium Hazard		High Hazard	
	Class A	Class B	Class A	Class B	Class A	Class B
Minimum rating for single extinguisher	2-A	5-B or 10-B(1)	2-A	10-B or 20-B	4-A	40-B or 80-B(2)
Maximum coverage (floor area) per unit of A-rating	3,000 ft^2	n/a	1,500 ft^2	n/a	1,000 ft^2	n/a
Maximum floor area for extinguisher	11,250 ft^2	n/a	11,250 ft^2	n/a	11,250 ft^2	n/a
Maximum travel distance to extinguisher	75 ft	30 ft for 5-B 50 ft for 10-B	75 ft	30 ft for 5-B 50 ft for 10-B	75 ft	30 ft for 5-B 50 ft for 10-B

(1) up to 3 foam extinguishers of at least 2 1/2 gal (9.5 L) capacity may be used to fulfill low hazard requirements
(2) up to 3 aqueous film foaming foam (AFFF) extinguishers of at least 2 1/2 gal (9.5 L) capacity may be used to fulfill high hazard requirements

Derived from NFPA 10
In multiple-story facilities, at least 1 extinguisher shall be adjacent to stairways. On construction and demolition projects, a 1/2 in (1.2 cm) diameter garden hose, not to exceed 100 ft (30.4 m) in length and equipped with a nozzle, may be substituted for a 2-A rated fire extinguisher provided it its capable of discharging a minimum of 5 gal (18.9 L) per minute with minimum hose stream range of 30 ft (9.1 m) horizontally. The garden hose lines shall be mounted on conventional racks or reels. The number of location of hose racks or reels shall be such that at least 1 hose stream can be applied to all points in the area.

b. Fire extinguishers shall be marked with their letter (class of fire) and numeric (relative extinguishing effectiveness) classification.

c. Fire extinguishers using carbon tetrachloride or chlorobromomethane extinguishing agents are prohibited.

d. Soldered or riveted shell self-generating foam or gas cartridge water-type portable extinguishers that are operated by inverting the extinguisher to rupture or initiate an uncontrollable pressure generating chemical reaction to expel the agent are prohibited.

09.E.03 Fire extinguishers shall be in a fully charged and operable condition and shall be suitably placed, distinctly marked, and readily accessible.

09.E.04 When portable fire extinguishers are provided for employee use in the workplace, the employer shall provide training (upon initial employment and at least annually thereafter) in the following:

a. General principles of fire extinguisher use and the hazards involved with incipient stage fire fighting to all employees; and

b. Use of the appropriate fire fighting equipment to those employees designated in an emergency action plan to use fire fighting equipment.

09.E.05 Approved fire blankets shall be provided and kept in conspicuous and accessible locations as warranted by the operations involved.

09.E.06 No fire shall be fought where the fire is in imminent danger of contact with explosives: all persons shall be removed to a safe area and the fire area guarded against intruders.

09.E.07 Standpipe and hose system equipment.

a. Standpipes shall be located or otherwise protected against damage. Damaged standpipes shall be repaired promptly.

b. Reels and cabinets used to contain fire hose shall be designed and maintained to ensure the prompt use of the hose valve, hose, and other equipment. Reels and cabinets shall be conspicuously identified and used only for fire equipment.

c. Hose outlets and connections shall be located high enough above the floor to avoid their obstruction and to be accessible to employees. To ensure hose connections are compatible with support fire equipment, screw threads shall be standardized or adapters shall be provided throughout the system.

d. Standpipe systems shall be equipped with vinyl type or lined hoses of such length that friction loss resulting from water flowing through the hose will not decrease the pressure at the nozzle below 30 psi (206.8 kPa) gauge. The dynamic pressure at the nozzle shall be within 30 psi (206.8 kPa) gauge and 125 psi (861.8 kPa) gauge.

e. Standpipe hoses shall be equipped with basic spray nozzles with a straight stream to wide stream spray pattern. Nozzles shall have a water discharge control capable of functions ranging from full discharge to complete shutoff.

09.E.08 The following tests shall be performed on standpipe and hose systems before placing them in service:

a. Piping (including yard piping) shall be hydrostatic tested for at least 2 hours at not less than 200 psi (1378.9 kPa) (or at least 50 psi (344.7 kPa) in excess of normal pressure when the normal pressure is greater than 150 psi (1034.2 kPa)); and

b. Hose shall be hydrostatic tested with couplings in place at a pressure of not less than 200 psi (1378.9 kPa) (this pressure shall be maintained for at least 15 seconds, but not more than 1 minute, during which time the hose shall not leak nor shall the jacket thread break).

09.E.09 Standpipe and hose system inspection and maintenance.

a. Water supply tanks shall be kept filled to the proper level except during repairs. When pressure tanks are used, proper pressure shall be maintained at all times except during repairs.

b. Valves in the main piping connections to the automatic sources of water supply shall be kept fully open at all times, except during repairs.

c. Hose systems shall be inspected at least annually and after each use to assure that all equipment is in place, available for use, and in operable condition.

d. When the system or any portion of the system is found not to be serviceable, it shall be removed for repair and replaced with equivalent protection (such as fire watches and extinguisher) until the repairs are complete.

e. Hemp and linen hoses shall be unracked, physically inspected for deterioration, and reracked using a different fold pattern at least annually.

09.E.10 The minimum water supply for standpipe and hose systems provided for the use of employees shall be sufficient to provide 100 gal (0.37 m^3) per minute for at least 30 minutes.

09.E.11 For all structures in which standpipes are required, or where standpipes exist in structures being altered, the standpipes shall be brought up as soon as practical and maintained as construction progresses so that they are always ready for fire protection use. There shall be at least one standard hose outlet at each floor.

09.E.12 For employees that may encounter incipient stage wild land fires, local safety programs shall provide basic training (upon initial employment and at least annually thereafter) in techniques commonly used to extinguish incipient stage wild land fires and the hazards associated with such fire fighting activities.

09.F FIXED FIRE SUPPRESSION SYSTEMS

09.F.01 Fixed fire suppression systems shall be designed, installed, and acceptance-tested in accordance with requirements of the NFPA.

09.F.02 Fixed fire suppression systems shall be inspected and maintained in accordance with the applicable NFPA standards. Inspection and maintenance dates shall be recorded on the container, on a tag attached to the container, or in a central location.

09.F.03 Automatic sprinkler systems shall be protected from damage.

09.F.04 Vertical clearance of at least 18 in (45.7 cm) shall be maintained between the top of stored material and sprinkler deflectors.

09.F.05 If a fixed extinguishing system becomes inoperable, the employer shall notify the employees and take necessary precautions to assure their safety until the system is restored to operating order.

09.F.06 Effective safeguards shall be provided to warn employees against entry into fixed extinguishing system discharge areas where the atmosphere remains hazardous to employee safety and health. Manual operating devices shall be identified as to the hazard against which they will provide protection.

09.F.07 Warning or caution signs shall be posted at the entrance to, and inside, areas protected by fixed extinguishing systems that use agents in concentrations known to be hazardous to employee safety and health.

09.F.08 Dry chemical fixed extinguishing systems.

a. Dry chemical extinguishing agents shall be compatible with any foams or wetting agents with which they are used.

b. Dry chemical extinguishing agents of different compositions shall not be mixed together.

c. Dry chemical extinguishing systems shall be refilled with the chemical stated on the approval nameplate or an equivalent compatible material.

09.F.09 Gaseous agent fixed extinguishing systems.

a. Agents used for initial supply and replenishment shall be of a type approved for the system's application (CO_2 obtained by dry ice conversion to liquid is not acceptable unless it is processed to remove excess oil and water).

b. Employees shall not be exposed to toxic levels of the gaseous agent or its decomposition products.

09.F.10 When water and spray foam fixed extinguishing systems are used, the drainage of water shall be away from work areas and routes of emergency egress.

09.G FIRE FIGHTING EQUIPMENT

09.G.01 Fire fighting equipment shall be provided and installed in accordance with applicable NFPA, OSHA, and USCG regulations.

09.G.02 No fire protection equipment or device shall be made inoperative or used for other purposes, unless specifically approved by the GDA.

09.G.03 If fire hose connections are not compatible with local fire fighting equipment, adapters shall be made available.

09.H FIRE DETECTION AND EMPLOYEE FIRE ALARM SYSTEMS

09.H.01 Fire detection and employee fire alarm systems shall be designed and installed in accordance with requirements of NFPA and OSHA.

09.H.02 Fire detection systems and components shall be restored to normal operating condition as soon as possible after each test/alarm. Spare devices and components shall be maintained in sufficient quantities for the prompt restoration of the system.

09.H.03 Fire detection systems shall be maintained in operable condition except during maintenance or repairs.

a. Fire detectors and detector systems shall be tested and adjusted as often as necessary to maintain operability and reliability: factory calibrated detectors need not be adjusted after installation.

b. Pneumatic and hydraulic operated detection systems installed after January 1, 1981, shall be equipped with supervised systems.

c. The servicing, testing, and maintenance of fire detection systems shall be performed by a trained person knowledgeable in the operations and functions of the system.

d. Fire detectors that need to be cleaned of dirt, dust, or other particulate matter to be fully functional shall be cleaned at regular intervals.

09.H.04 Fire detection systems and devices shall be protected from weather, corrosion, and mechanical and physical damage.

09.H.05 Fire detectors shall be supported independently of their control wiring or tubing.

09.H.06 An alarm system shall be established by the employer so that employees on the site and the local fire department can be alerted of an emergency.

09.H.07 Manually operated alarm actuation devices shall be conspicuous and accessible and inspected and maintained in operable condition.

09.H.08 The alarm shall be distinctive and recognizable as a signal to evacuate the work area or to perform actions designated in the emergency action plan.

a. The alarm shall be capable of being perceived above ambient noise and light levels by all employees in the affected area.

b. Tactile devices may be used to alert those employees who would not otherwise be able to recognize the audible or visual alarm.

09.H.09 Employees shall be instructed in the preferred means of reporting emergencies, such as manual pull box alarms, public address systems, or telephones.

a. The alarm code and reporting instructions shall be conspicuously posted at phones and at employee entrances.

b. Reporting and evacuating instructions shall be conspicuously posted.

c. For work at installations that are equipped with radio wave fire alarm systems, a compatible fire alarm transmitter should be used at the construction site.

09.I FIRE FIGHTING ORGANIZATIONS - TRAINING AND DRILLING

09.I.01 Fire fighting organizations shall be provided to assure adequate protection to life and property. NFPA recommendations

shall be used for determining type, size, and training of fire fighting organizations.

09.I.02 Fire brigade drills shall be held to assure a well-trained and efficient operating force. Records of such drills shall be maintained at the installation.

09.I.03 Demonstration and training in first-aid fire fighting shall be conducted at intervals to ensure that project personnel are familiar with, and capable of operating, fire fighting equipment.

09.J FIRE PATROLS

09.J.01 When watch personnel or guards are provided, they shall make frequent rounds through buildings and storage areas when work is suspended.

09.J.02 Smoke detectors shall be installed and maintained where personnel are quartered.

09.J.03 In any instance where combustible materials have been exposed to fire hazards (such as welding operations, hot metals, or open flame), a watcher shall be assigned to remain at the location for at least 1 hour after the exposure has ended.

09.K USACE WILD LAND FIRE CONTROL

09.K.01 At all USACE facilities and areas with potential exposure to wild land fire, whether prescribed or planned, a wild land fire management plan shall be developed. The plan, which is further detailed in EP 1130-2-540, shall address prescribed fire and wild fire prevention and suppression, shall include the following items, and shall be updated annually:

a. An individual prescribed fire "burn plan" procedure, as outlined in EP 1130-2-540, that requires individual "burn plans" to include an AHA and an on-site safety meeting to include discussion of predicted weather patterns, escape route(s), and safety zone(s);

b. An analysis of wild fire causes and special wild fire hazards and risks;

c. Proposed measures to reduce wild fire occurrence and decrease fire damage;

d. Procedures for public education and wild fire prevention sign posting (including procedures for keeping the public informed of the current fire danger rating); and

e. Provisions for cooperative efforts with all other neighboring wild land fire management protection agencies;

f. The in-house wild land fire management or control team organization and personnel roster, training and equipment requirements, and notification procedures;

g. A listing of cooperating agencies and notification procedures, (including any mutual aid agreements with adjacent fire departments and agencies);

h. A listing of additional available resources for work force, equipment, supplies, and facilities, and contracting or procurement information;

i. An up-to-date map(s) of the managed and/or protected area(s) that shows boundaries, roads, and other means of access, heliports, airports, water sources, special hazards, and special fire risks;

j. A listing of weather information sources;

k. Procedures for public notification; and

l. A pre-attack fire suppression plan as outlined in EP 1130-2-540.

09.K.02 Wild land fire management teams and operations should be organized and conducted in accordance with the requirements of NFPA 295.

a. Wild land fire management team personnel shall, as a minimum, receive training that will include fire line safety, basic wild land fire behavior, basic wild land fire suppression tactics, communications procedures, first aid and use, limitations and care of protective and fire fighting equipment.

b. Fire fighting equipment shall be maintained in working and ready condition.

c. PPE, fire-resistant clothing, safety hard hat, non steel-toe leather boots, goggles, and fire resistant gloves, as required by NFPA 295, part 3-1.2.1 and NFPA 1977, shall be provided and maintained in working and ready condition. ***> See also Section 5.***

d. Employees engaged in fire management activities shall be examined, as part of their medical surveillance, by a physician and certified to be physically able to perform assigned fire management duties.

e. Communication equipment shall be provided to personnel as necessary for coordination, control, and emergency needs.

09.K.03 Recommendations of NFPA 295 shall be complied with in wild land fire situations not covered in this Section.

09.K.04 Wild land fire management teams shall consist of two or more qualified individuals.

SECTION 10

WELDING AND CUTTING

10.A GENERAL

10.A.01 Welders, cutters, and their supervisor shall be trained in the safe operation of their equipment, safe welding/cutting practices, and welding/cutting respiratory and fire protection.
> AIHA publication "Welding Health and Safety: A Field Guide for OEHS Professionals" is recommended.

10.A.02 All welding equipment shall be inspected daily. Defective equipment shall be removed from service, replaced or repaired, and reinspected before again being placed in service.

10.A.03 Electrical and pressurized system requirements.

a. Welding cylinders and their use shall meet the applicable requirements of Section 20.

b. Arc welding and cutting systems and their use shall meet the applicable requirements of Section 11.

10.A.04 Workers, watchers, and the public shall be shielded from welding rays, flashes, sparks, molten metal, and slag.

10.A.05 Cable, hoses, and other equipment shall be kept clear of passageways, ladders, and stairways.

10.A.06 Welding and cutting of hazardous materials.

a. When welding, cutting, or heating on steel pipelines containing natural gas, 49 CFR 192 shall apply.

b. Before welding, cutting, or heating is commenced on any surface covered by a preservative coating whose flammability is not known, a test shall be made to determine its flammability.

Preservative coatings shall be considered highly flammable when scrapings burn with extreme rapidity.

c. Preservative coatings shall be removed a sufficient distance from the area to be heated to ensure any temperature increase of the unstripped metal will not be appreciable: artificial cooling of the metal surrounding the heating area may be used to limit the area to be stripped.

d. When welding, cutting, or heating toxic preservative coatings in enclosed spaces, all surfaces covered with toxic preservatives shall be stripped of such coverings for a distance of at least 4 in (10.1 cm) from the area of heat application or the employees shall be protected by airline respirators.

e. When welding, cutting, or heating toxic preservative coatings in the open air, employees shall be protected by a respirator.

10.A.07 All structural welding accomplished by the Contractor or subcontractor on critical items, such as scaffolding, shoring, forms, ladders, piling, etc., shall be performed by certified welders using qualified welding procedures.

10.A.08 Before heat is applied to a drum, container, or hollow structure, a vent or opening shall be provided for the release of any built-up pressure generated during the application of heat.

10.A.09 Employees performing welding, cutting, or heating shall be protected by PPE appropriate for the hazards. Respiratory, vision, and skin protection required in this Section shall be in compliance with applicable requirements of Section 5.

10.A.10 All welding and cutting equipment and operations shall be in accordance with standards and recommended practices of ANSI/ American Welding Society (AWS) Z49.1.

10.B RESPIRATORY PROTECTION

10.B.01 All welding, cutting, and heating operations shall be ventilated (natural or mechanical) such that personnel exposures to hazardous concentrations of airborne contaminants are within acceptable limits. **>** ***See Section 6.***

10.B.02 Welding, cutting, and heating not involving conditions or materials described in this Section may normally be done without mechanical ventilation or respiratory protective equipment.

10.B.03 Either general mechanical or local exhaust ventilation shall be provided whenever welding, cutting, or heating is performed in a confined space. **>** ***See 10.A.06.d and 10.B.05.***

10.B.04 Materials of toxic significance. Welding, cutting, or heating operations that involve or generate any of the substances listed below shall be performed in accordance with the following subparagraphs. **>** ***See also 10.A.06.d.***

Antimony Arsenic Barium Beryllium Cadmium
Chromium Cobalt Copper Lead Manganese
Mercury Nickel Ozone Selenium Silver Vanadium

a. Whenever these materials are encountered in confined spaces, local mechanical exhaust ventilation and personal respiratory protection shall be used.

b. Whenever these materials, except beryllium, are encountered in indoor operations, local mechanical exhaust ventilation shall be used. When beryllium is encountered in indoor operations, local mechanical exhaust ventilation and personal respiratory protection shall be used.

c. Whenever these materials are encountered in outdoor operations, personal respiratory protection shall be used.

10.B.05 Welding, cutting, or heating operations that involve or generate fluorine or zinc compounds shall be performed in accordance with the following.

a. In confined spaces, local mechanical exhaust ventilation or personal respiratory protection shall be used.

b. In open spaces, sampling shall be performed to determine concentrations of fluorides or zinc compounds and the need for local exhaust ventilation or personal respiratory protection.

10.B.06 Arc and gas cutting. Oxygen cutting using either an iron powder or chemical flux, gas-shielded arc cutting, and plasma cutting shall employ local mechanical exhaust ventilation or other means adequate to remove the fumes generated.

10.B.07 Other persons exposed to the same atmosphere as welders or cutters shall be protected in the same manner as welders or cutters.

10.C FIRE PROTECTION

10.C.01 Compatible fire extinguishing equipment shall be provided in the immediate vicinity of welding or cutting operations.

10.C.02 Before conducting welding or cutting operations, the area shall be surveyed to ensure it is free of the following hazards:

a. Proximate combustible materials,

b. The presence or possible generation of potentially explosive atmospheres (flammable gases, vapors, liquids, or dusts), and

c. The presence or nature of an oxygen-enriched atmosphere.

10.C.03 Hierarchy of fire control. Objects to be welded, cut, or heated shall be:

a. Moved to a location free of dangerous combustibles;

b. If the work cannot be moved, all moveable fire hazards in the vicinity shall be taken to a safe place (moved at least 35 ft (10.6 m) horizontally from the welding or cutting area) or the combustible material and construction shall be protected from the heat, sparks, and slag of welding;

c. When welding or cutting must be done in a location where combustible or flammable materials are located, inspection and written authorization by the GDA shall be required before such operations are begun (the location shall be checked for latent fires after the work is completed).

10.C.04 When a welding, cutting, or heating operation is such that normal fire prevention precautions are not sufficient, additional personnel shall be assigned to guard against fire and shall be instructed in anticipated fire hazards and how fire fighting equipment is to be used.

10.C.05 When welding or cutting is to be done over combustible flooring, the flooring shall be protected by fire-resistant shielding, covered with damp sand, or kept wet. Where flooring is wet or damp, personnel operating arc welding or cutting equipment shall be protected from possible shock.

10.C.06 Noncombustible barriers shall be installed below welding or burning operations in a shaft or raise.

10.C.07 Openings or cracks in walls, floors, or ducts within 35 ft (10.6 m) of the site shall be tightly covered to prevent the passage of sparks to adjacent areas.

10.C.08 Where welding or cutting is to be done near walls, partitions, ceilings, or roofs of combustible construction, fire resistant guards shall be provided to prevent ignition.

10.C.09 Where welding or cutting is to be done on a metal wall, partition, ceiling, or roof, precautions shall be taken to prevent

ignition, due to heat conduction or radiation, of combustibles on the other side.

10.C.10 Welding or cutting shall not be done on a metal partition, wall, ceiling, or roof with a combustible covering nor on walls or partitions of combustible sandwich-type panel construction.

10.C.11 Before welding or cutting drums, tanks, or other containers and equipment that have contained hazardous materials, the containers shall be thoroughly cleaned in accordance with NFPA 327and ANSI/AWS F4.1.

10.C.12 Hot tapping or other welding or cutting on a flammable gas or liquid transmission or distribution pipeline shall be performed only by personnel qualified to make hot taps and only with the permission of the GDA.

10.C.13 When welding or cutting is done near a sprinkler head, a wet cloth shall be used to cover the head during, and then removed at the completion of, the welding or cutting.

10.C.14 When welding or cutting in areas protected by fire detection and suppression systems, precautions shall be taken to avoid accidental initiation of these systems.

10.D OXYFUEL GAS WELDING AND CUTTING

10.D.01 Oxyfuel gas welding and cutting equipment shall be listed by a nationally-recognized testing laboratory.

10.D.02 Oxygen cylinders and apparatus.

a. Oxygen cylinders and apparatus shall be kept free from oil, grease, and other flammable or explosive substances and shall not be handled with oily hands or gloves.

b. Oxygen cylinders and apparatus shall not be used interchangeably with any other gas.

10.D.03 Hose.

a. Fuel gas hose and oxygen hose shall be readily distinguishable from each other.

b. Oxygen and fuel gas hoses shall not be interchangeable. A single hose having more than one gas passage shall not be used.

c. Hose couplings of the type that can be unlocked or disconnected without a rotary motion are prohibited.

d. Hose that has been subject to flashback or that shows severe wear or damage shall be tested to twice the normal pressure to which it is subjected, and in no case less than 300-psi (2068.4-kPa) gauge. Defective hose, or hose in doubtful condition, shall not be used.

e. When parallel runs of oxygen and fuel gas hose are taped together, not more than 4 out of every 12 in (10 out of every 30.4 cm) shall be covered by tape.

f. Boxes used for the storage of gas hose shall be ventilated.

g. Hose connections shall be clamped or otherwise securely fastened in a manner that will withstand, without leakage, twice the pressure to which they are normally subjected in service, but not less than 300-psi (2068.4-kPa) gauge.

10.D.04 Torches.

a. Torches shall be inspected, at the beginning of each working shift, for leaking shutoff valves, hose couplings, and tip connections. Defective torches shall not be used.

b. Hoses shall be purged individually before lighting the torch for the first time each day. Hoses shall not be purged into confined spaces or near ignition sources.

c. Clogged torch tip openings shall be cleaned with suitable cleaning wires, drills, or other devices designed for such purposes.

d. Torches shall be lighted by friction lighters or other approved devices, not by matches or from hot work.

10.D.05 Torch valves shall be closed and the gas supply shut off whenever work is suspended.

10.D.06 The torch and hose shall be removed from confined spaces whenever work is suspended.

10.D.07 Protective equipment.

a. Oxyfuel gas, and other oxygen-fuel gas, welding and cutting systems using cylinder-hose-torch shall have a reverse-flow check valve and flash arrestor, in each hose, at the torch and the regulator.

b. When oxygen-fuel gas systems are manifolded together the provisions of NFPA 51 shall apply.

10.D.08 Connection of multiple sets of oxyacetylene hoses to a single regulator on a single set of oxyacetylene tanks may only be accomplished by installing a commercially available fitting approved by CGA standards and listed by a nationally-recognized testing laboratory. The fitting shall be installed on the output side of the regulator and shall have a built-in shut-off valve and reverse-flow check valve on each branch.

10.D.09 Acetylene regulators shall not be adjusted to permit a discharge greater than 15-psi (103.4-kPa) gauge.

10.E ARC WELDING AND CUTTING

10.E.01 Electric welding apparatus shall be installed, maintained, and operated in accordance with the NEC.

10.E.02 Manual electrode holders.

a. Only manual electrode holders specifically designed for arc welding and cutting of a capacity capable of safety handling the maximum rated current required by the electrodes may be used.

b. All current carrying parts of the holder that are gripped by the welder or cutter, and the outer jaws of the holder, shall be fully insulated against the maximum voltage encountered to ground.

10.E.03 Cables and connectors.

a. Cables shall be completely insulated, flexible, capable of handling the maximum current requirements of the work in progress, and in good repair. ***> See 11.A.03(c).***

b. Cables with splices or repaired insulation within 10 ft (3 m) of the holder shall not be used.

c. Where it becomes necessary to connect or splice lengths of cable together, insulated connectors of a capacity at least equivalent to that of the cable shall be used. When connections are affected by cable lugs, they shall be securely fastened together to give good electrical contact and the exposed metal parts of the lugs shall be completely insulated.

10.E.04 The frames of arc welding and cutting machines shall be grounded either by a third wire in the cable connecting the circuit conductor or by a separate wire that is grounded at the source of the current.

10.E.05 Neither terminal of the welding generator shall be bonded to the frame of the welder.

10.E.06 Pipe lines containing gases or flammable liquids or conduits carrying electrical conductors shall not be used for a ground return circuit.

10.E.07 Circuits from welding machines used for other than welding tools shall be grounded.

10.E.08 Welding supply cables shall not be placed near power supply cables or other high-tension wires.

10.E.09 Welding leads shall not be permitted to contact metal parts support suspended scaffolds.

10.E.10 Switching equipment for shutting down the welding machine shall be provided on or near the welding machine.

10.E.11 Equipment shall be shut down when the leads are unattended.

10.E.12 Arc welding and cutting operations shall be shielded by noncombustible or flameproof screens to protect employees and other visitors from the direct rays of the arc.

10.E.13 Coiled welding cable shall be spread out before use.

10.F GAS METAL ARC WELDING

10.F.01 Chlorinated solvents shall be kept at least 200 ft (60.9 m), unless shielded, from the exposed arc. Surfaces prepared with chlorinated solvents shall be dry before welding is permitted on such surfaces.

10.F.02 Persons in the area not protected from the arc by screening shall be protected by filter lenses. When two or more welders are exposed to each other's arc, filter lens goggles shall be worn under welding helmets. Hand shields shall be used to protect the welders against flashes and radiant energy when either the helmet is lifted or the shield is removed.

10.F.03 Welders and other persons who are exposed to radiation shall be protected so that the skin is covered to prevent burns and other damage by ultraviolet rays. Welding helmets and hand

shields shall be free of leaks, openings, and highly reflective surfaces.

10.F.04 When gas metal arc welding is performed on stainless steel, persons will be protected against dangerous concentrations of nitrogen dioxide by local exhaust ventilation or airline respirators.

SECTION 11

ELECTRICAL

11.A GENERAL

11.A.01 Approval and qualification.

a. All electrical wiring and equipment shall be a type listed by a nationally recognized testing laboratory for the specific application for which it is to be used.

b. All electrical work shall comply with applicable National Electrical Safety Code (NESC), NEC, and USCG regulations.

c. Electrical work shall be performed by qualified personnel with verifiable credentials who are familiar with applicable code requirements. ***> See definition of qualified person (electrical) in Appendix Q.***

11.A.02 Isolation.

a. Before work is begun, the person in charge shall ascertain by inquiry, by direct observation, or by instruments, whether any part of an electric power circuit (exposed or concealed) is located such that the performance of work could bring any person, tool, or machine into physical or electrical contact with it.

b. Whenever possible, all equipment and circuits to be worked on shall be de-energized before work is started and personnel protected by clearance procedures, lockout/tagout, and grounding. On each machine operated by electric motors, positive means shall be provided for rendering such controls or devices inoperative while repairs or adjustments are being made to the machines they control. ***> See Section 12.***

c. Live parts of wiring or equipment shall be guarded to protect all persons or objects from harm.

d. Transformer banks and high voltage equipment shall be protected from unauthorized access; entrances not under constant observation shall be kept locked; metallic enclosures shall be grounded; and signs warning of high voltage and prohibiting unauthorized entrance shall be posted at entrances.

e. Enclosure gates or doors shall swing outward or provide clearance from installed equipment.

11.A.03 Flexible cords.

a. For construction sites, all flexible cords shall be inspected by the user of the cord at least daily.

b. Flexible cord sets used on construction sites or in damp locations shall contain the number of conductors required for the service plus an equipment ground wire. The cords shall be hard usage or extra hard usage as specified in the NEC.

c. Electric wire and flexible cord passing through work areas shall be protected from damage (including that caused by foot traffic, vehicles, sharp corners, protections, and pinching). Flexible cords and cables passing through holes shall be protected by bushings or fittings.

d. Flexible cord shall be used only in continuous lengths without splice or tap, except hard service flexible cords No. 12 or larger with molded or vulcanized splices may be used if the splices are made by a qualified electrician, the insulation is equal to the cable being spliced, and wire connections are soldered.

e. Patched, oil-soaked, worn, or frayed electric cords or cables shall not be used.

f. Extension cords or cables shall not be secured with staples, hung from nails, or suspended by bare wire.

11.A.04 When it is necessary to work on energized lines or equipment, rubber gloves and other protective equipment or hotline tools meeting the provisions of ANSI and ASTM standards shall be used. For work on energized equipment only tools insulated for the voltage shall be used. > ***See Section 05.G.***

11.A.05 Whenever it is necessary to work on energized parts greater than 50 volts to ground, a risk/hazard analysis will be conducted in accordance with NFPA 70E, Part II, Appendix D.

11.A.06 An electrical arc flash hazard analysis shall be conducted in accordance with the NEC (NFPA 70E, Part II, Chapter 2-1) to determine the flash hazard protection boundary before a person approaches any exposed electrical conductor or circuit part that has not been placed in an electrically safe work condition.

11.A.07 For systems that are 600 volts and below, the flash protection boundary shall be 4 ft (1.2 m), based upon the product of clearing times of 6 cycles (0.1 second) and available bolted fault current of 50 kiloamp (kA) or any combination not exceeding 300 kA cycles (5000 ampere seconds). For clearing times and bolted fault currents other than 300 kA cycles (5000 ampere seconds), or under engineering supervision, the flash protection boundary shall alternatively be permitted to be calculated in accordance with the following general formula.

$$D_c = \left[2.65 \times MVA_{bf} \times t\right]^{1/2}$$

or

$$D_c = \left[53 \times MVA \times t\right]^{1/2}$$

Where:

MVA_{bf} = bolted fault megavolts-amperes (MVA) available at the point involved

MVA = the MVA rating of the transformer. For transformers with MVA ratings below 0.75 MVA, multiply the transformer MVA rating by 1.25

t = time or arc exposure in seconds

11.A.08 At least two persons shall be assigned to work together in the following situations:

a. Work on energized overhead lines.

b. Work at substations/power plants where wiring is congested.

c. Work-involving handling energized conductors or apparatus.

One person shall be trained to recognize situations that are dangerously close to live conductors or performance of unsafe electrical acts. This person shall be delegated to watch the movements of the other(s) doing the work so that he/she can warn them if they get dangerously close to live conductors or perform other unsafe acts. He/she can also assist in case of an accident.

11.A.9 Switch boxes, receptacle boxes, metal cabinets, enclosures around equipment, and temporary power lines shall be marked to indicate the maximum operating voltage.

11.A.10 Insulation mats or platforms of substantial construction and providing good footing shall be placed on floors and on the frames of equipment having exposed live parts so that the operator or persons in the vicinity cannot touch such parts unless standing on the mats, platforms, or insulated floors.

11.A.11 Suitable barriers or other means shall be provided to ensure that workspace for electrical equipment cannot be used as a passageway when energized parts of electrical equipment are exposed.

11.A.12 When fuses are installed or removed with one or both terminals energized, special tools insulated for the voltage shall be used.

11.A.13 Attachment plugs and receptacles.

a. Plugs and receptacles shall be kept out of water unless of an approved submersible type.

b. Attachment plugs for use in work areas shall be constructed so that they will endure rough use and shall be equipped with a cord grip to prevent strain on the terminal screws.

c. Attachment plugs and other connectors supplying equipment at more than 300 volts shall be skirted or otherwise designed so that arcs will be confined.

d. When a National Electrical Manufacturers Association (NEMA) standard configuration exists for a particular voltage, amperage, frequency, or type of current, the NEMA standard plug and receptacle shall be used.

11.A.14 Portable hand lamps.

a. Portable hand lamps shall be of molded composition or another type approved for the purpose.

b. Metal-shell, paper-lined lamp holders shall not be used.

c. Hand lamps shall be equipped with a handle and with a substantial guard over the bulb. The guard shall be attached to the lamp holder or the handle.

11.B OVERCURRENT PROTECTION, DISCONNECTS, AND SWITCHES

11.B.01 All circuits shall be protected against overload.

a. Overcurrent protection shall be based on the current-carrying capacity of the conductors supplied and the power load being used.

b. No overcurrent device shall be placed in any permanently grounded conductor except where the overcurrent device simultaneously opens all conductors of the circuit or where the device is required by NEC 430 for motor overload protection.

c. Overcurrent protection devices must be readily accessible, clearly labeled, not exposed to physical damage, not placed in the vicinity of easily ignitable materials, and located or shielded such that their operation will not expose employees to injury due to arching or the sudden movement of parts.

d. Circuit breakers shall clearly indicate whether they are in the open (de-energized) or closed (energized) position.

e. Enclosures containing overcurrent protective devices shall be provided with lockable, close-fitting doors. At least 36 in (91.4 cm) of clearance must be maintained around all sides of the enclosure. On vessels or floating plant where the 36 in (91.4 cm) clearance is not feasible, sufficient clearance for fully opening the door and/or servicing the electrical enclosure shall be maintained.

11.B.02 Disconnects.

a. Disconnecting means shall be located or shielded so that persons will not be injured when the disconnect is operated.

b. Enclosures for disconnecting means shall be securely fastened to the surface and fitted with covers.

11.B.03 Switches.

a. A readily accessible, manually-operated switch shall be provided for each incoming service or supply circuit.

b. Switches shall be of the externally operable type mounted in an enclosure listed for the intended use and installed to minimize the danger of accidental operation.

11.B.04 Switches, fuses, and automatic circuit breakers shall be marked, labeled, or arranged for ready identification of the circuits or equipment that they supply.

11.B.05 Switches, circuit breakers, fuse panels, and motor controllers located out-of-doors or in wet locations shall be in a weatherproof enclosure or cabinet.

11.C GROUNDING

11.C.01 All electrical circuits shall be grounded in accordance with the NEC and the NESC unless otherwise noted in this manual.

a. A ground shall be provided for non-current carrying metallic parts of such equipment as generators (if not exempted by NEC 250.34), electrically powered arc welders, switches, motor controller cases, fuse boxes, distribution cabinets, frames, non-current carrying rails used for travel and motors of electrically operated cranes, electric elevators, metal frames of non-electric elevators to which electric conductors are attached, other electric equipment, and metal enclosures around electric equipment.

b. Portable Generators. The frame of portable generators shall not be required to be grounded and shall be permitted to serve as the grounding electrode for a system supplied by the generator under the following conditions:

(1) The generator supplies ONLY equipment mounted on the generator, cord-and-plug-connected equipment through receptacles mounted on the generator, or both; and

(2) The non-current-carrying metal parts of the equipment and the equipment grounding conductor terminals of the receptacles are bonded to the generator frame.

c. Vehicle-Mounted Generators. The frame of a vehicle shall be permitted to serve as the grounding electrode for a system supplied by a generator located on the vehicle under the following conditions:

(1) The frame of the generator is bonded to the vehicle frame, and

(2) The generator supplies only equipment located on the vehicle or cord-and-plug-connected equipment through receptacles mounted on the vehicle, or both equipment located on the vehicle and cord-and-plug-connected equipment through receptacles mounted on the vehicle or on the generator, and

(3) The non-concurrent-carrying metal parts of equipment and the equipment grounding conductor terminals of the receptacles are bonded to the generator frame, and

(4) The system complies with all other provisions of NEC 250.

d. A system that is required to be grounded by NEC 250.30 shall be bonded to the generator frame where the generator is a component of a separately derived system.

e. Portable and semi-portable electrical tools and equipment shall be grounded by a multi-conductor cord having an identified grounding conductor and a multi-contact polarized plug and receptacle.

f. Semi-portable equipment, floodlights, and work lights shall be grounded. The protective ground should be maintained during moving unless supply circuits are de-energized.

g. Tools protected by an approved system of double insulation, or its equivalent, need not be grounded. Double-insulated tools shall be distinctly marked and listed by a nationally-recognized testing laboratory.

11.C.02 Grounding rod and pipe electrodes.

a. Electrodes of rod or pipe shall be free from non-conducting coatings and, if practicable, shall be embedded below permanent moisture levels.

b. Grounding rod and pipe electrodes shall be in unbroken 8-ft (2.4-m) lengths and driven to full depth. Where rock bottom is encountered, the electrode shall be driven at an angle not to exceed 45° from the vertical or shall be buried in a trench that is at least 2.5 ft (0.7 m) deep.

c. A single electrode that does not have a resistance to ground of 25 ohms or less, shall be augmented by one additional electrode spaced no closer than 6 ft (1.8 m) to the first electrode.

d. Electrodes of rods of iron or steel shall be at least 5/8 in (1.5 cm) diameter. Nonferrous rods, or their equivalent, shall be listed by a nationally-recognized testing laboratory and shall be at least 0.5 in (1.2 cm) diameter.

e. Electrodes of pipe or conduit shall be at least 3/4 in (1.9 cm) trade size. Pipes and conduit of iron or steel shall have the outer surface galvanized or otherwise metal-coated for corrosion control.

f. Grounding electrode systems of permanent facilities shall be in accordance with NEC 250.

11.C.03 Conductors used for bonding or grounding stationary and movable equipment shall be of ample size to carry the anticipated current.

a. When attaching bonding and grounding clamps or clips, a secure and positive metal-to-metal contact shall be made.

b. The ground end shall be attached first. The equipment end shall be attached and removed by insulated tools or other suitable devices.

c. When removing grounds, the grounding device shall be removed from the line or equipment first, using insulated tools or other suitable devices.

d. Bonding and grounding attachments shall be made before systems are activated and shall not be broken until after systems are de-activated.

11.C.04 Grounding circuits shall be checked to ensure that the circuit between the ground and a grounded power conductor has a resistance low enough to permit sufficient current flow to allow the fuse or circuit breaker to interrupt the current.

11.C.05 All receptacle outlets that provide temporary electrical power during construction, remodeling, maintenance, repair, or demolition, shall have ground-fault circuit-interrupter (GFCI) protection for personnel. GFCI protection shall be provided on all circuits serving portable electric hand tools or semi-portable electric power tools (such as block/brick saws, table saws, air compressors, welding machines, and drill presses).

a. The GFCI device shall be calibrated to trip within the threshold values of 5 ma +/- 1 ma as specified in UL Standard 943. <u>GFCI devices shall be tested before initial use and before use after modification. Testing shall be documented.</u>

b. Receptacle outlets that are not part of the permanent wiring of the building or structure shall be GFCI protected by one of the following means:

(1) A receptacle outlet with integral GFCI protection,

(2) A standard receptacle outlet connected downstream of a receptacle outlet with integral GFCI protection, or

(3) Receptacles protected by a GFCI-type circuit breaker.

c. Receptacle outlets that are part of the permanent wiring of the building or structure (including portable generators) shall use a portable GFCI device if the receptacle outlets are not already GFCI protected. The portable GFCI device shall be as near as practicable to the receptacle outlet.

d. Electric tool circuits that are "hard-wired" directly to an electrical source of power shall be GFCI protected by a GFCI-type circuit breaker.

e. GFCIs shall be installed in accordance with the NEC. The permanent wiring shall consist of electrical circuits grounded in accordance with the NEC.

f. GFCIs may be sensitive to some equipment (such as concrete vibrators, etc.). In these instances, an assured equipment grounding conductor program in accordance with Appendix D is acceptable in lieu of GFCIs if the exception is documented on an AHA and documents the following:

(1) The conditions, or need, for the exception; and

(2) Implementation of the requirements of the assured equipment grounding conductor program.

(3) The request for the exception, the AHA, and the assured grounding program plan must be submitted and accepted by the GDA prior to implementing the program.

11.D TEMPORARY WIRING AND LIGHTING

11.D.01 A sketch of proposed temporary power distribution systems shall be submitted to the GDA and accepted for use before temporary power is installed. The sketch shall indicate the location, voltages, and means of protection of all circuits, including receptacles, disconnecting means, grounding, GFCIs, and lighting circuits.

11.D.02 Testing.

a. Temporary electrical distribution systems and devices shall be checked and found acceptable for polarity, ground continuity, and ground resistance before initial use and before use after modification. GFCI shall be tested monthly.

b. Ground resistance and circuits shall be measured at the time of installation and shall comply with 11.C.02 and 11.C.04. The measurement shall be recorded and a copy furnished to the GDA.

11.D.03 The vertical clearance of temporary wiring for circuits carrying 600 volts or less shall be:

a. 10 ft (3 m) above finished grade, sidewalks, or from any platform;

b. 12 ft (3.6 m) over areas subject to vehicular traffic other than truck traffic;

c. 18 ft (5.4 m) over public streets, alleys, roads, and driveways;

d. 15 ft (4.5 m) over areas other than those specified in 11.D.03c that are subject to truck traffic.

11.D.04 Wet locations.

a. Where a receptacle is used in a wet location, it shall be contained in a weatherproof enclosure, the integrity of which is not affected when an attachment plug is inserted.

b. All temporary lighting strings in outdoor or wet locations (such as tunnels, culverts, valve pits, floating plant, etc.) shall consist of lamp sockets and connection plugs permanently molded to the hard service cord insulation.

11.D.05 Wires shall be insulated from their supports.

11.D.06 Temporary lighting.

a. Bulbs attached to temporary lighting strings and extension cords shall be protected by guards unless the bulbs are deeply recessed in a reflector.

b. Unless designed for suspension, temporary lights shall not be suspended by their electric wire.

c. Exposed empty light sockets and broken bulbs shall be replaced immediately.

d. Portable electric lighting used in confined wet and/or other conductive locations (e.g., drums, tanks, and vessels) shall be operated at 12 volts or less. ***> See also 11.G; for additional information see of the NEC 410.***

11.D.07 When temporary wiring is used in tanks or other confined spaces, an approved switch, identified and marked, shall be provided at or near the entrance to such spaces for cutting off the current in emergencies.

11.D.08 Non-metallic sheathed cable may be used as allowed by the NEC and as follows:

a. Along studs, joists, or similar supports closely following the building finish or running boards when 7 ft 8 in (2.3 m) or more above the floor;

b. When firmly attached to each cabinet, box fitting, or fixture by means of a cable clamp.

Non-metallic sheathed cable may not be used where precluded by the NEC nor as portable extension cords, lying on the ground subject to any type of traffic, where subject to frequent flexing, or as service entrance cable.

11.D.09 Temporary lighting circuits shall be separate from electric tool circuits. Receptacle circuits shall be dedicated to either temporary lighting or electric tools and shall be labeled "**LIGHTS ONLY**" or "**TOOLS ONLY**," as applicable.

11.E OPERATIONS ADJACENT TO OVERHEAD LINES

11.E.01 Overhead transmission and distribution lines shall be carried on towers and poles that provide safe clearances over roadways and structures.

a. Clearances shall be adequate for the movement of vehicles and for the operation of construction equipment.

b. All electric power or distribution lines shall be placed underground in areas where there is extensive use of equipment having the capability to encroach on the clear distances specified in 11.E.04.

c. Protection of outdoor trolleys and portable cables rated above 600 volts for supplying power to moveable construction equipment such as gantry cranes, mobile cranes, shovels, etc., shall conform to NESC.

11.E.02 Work activity adjacent to overhead lines shall not be initiated until a survey has been made to ascertain the safe clearance from energized lines. ***> See 11.A.02***

11.E.03 Any overhead wire shall be considered energized unless the person owning such line or operating officials of the electrical utility supplying the line certifies that it is not energized and it has been visibly grounded and tested.

11.E.04 Operations adjacent to overhead lines are prohibited unless at least one of the following conditions is satisfied:

a. Power has been shut off and positive means taken to prevent the lines from being energized.

b. Equipment, or any part, does not have the capability of coming within the minimum clearance from energized overhead lines as specified in Table 11-1, or the equipment has been positioned and blocked to assure no part, including cables, can come within the minimum clearances as specified in Table 11-1; a notice of the minimum required clearance has been posted at the operator's position (electric line derrick trucks and aerial lifts are not required to comply with this requirement).

c. In transit with the boom lowered and no load, the equipment clearance shall comply with Table 11-1.

TABLE 11-1

MIMIMUM CLEARANCE FROM ENERGIZED OVERHEAD ELECTRIC LINES

Nominal system voltage	Minimum rated clearance
0 - 50 kV	9.8 ft (3 m)
51 - 200kV	14.7 ft (4.5 m)
201 - 300 kV	19.7 ft (6 m)
301 to 500 kV	24.6 ft (7.5 m)
501 - 750 kV	34.4 ft (10.5 m)
751 - 1000 kV	44.3 ft (13.5 m)

11.E.05 Work activity that could affect or be affected by overhead lines shall not be initiated until coordinated with the appropriate utility officials.

11.E.06 Standard emergency communication procedures shall be established and rehearsed to assure rapid emergency shutdown for all work being conducted on overhead power lines.

11.E.07 Floating plant and associated equipment shall not be sited or placed within 20 ft (6 m) of overhead transmission or distribution lines.

11.E.08 Cage boom guards, insulating links, or proximity warning devices may be used on cranes, but such devices shall not alter the requirements of any other regulation of this part - even if such device is required by law or other regulation. Insulating links shall be capable of withstanding a 1-minute dry low frequency dielectric test of 50,000 volts, alternating current.

11.E.09 Induced currents.

a. Before work near transmitter towers where there is potential for an electrical charge to be induced in equipment or materials, the transmitter shall be de-energized or tests shall be conducted to determine if an electrical charge could be induced.

b. The following precautions shall be taken to dissipate induced voltages:

(1) The equipment shall be provided with an electrical ground to the upper rotating structure supporting the boom, and

(2) Ground jumper cables shall be attached to materials being handled by boom equipment when electrical charge could be induced while working near energized transmitters. Crews shall be provided with nonconductive poles having large alligator clips or other similar protection to attach the ground cable to the load and insulating gloves will be used.

11.F BATTERIES AND BATTERY CHARGING

11.F.01 Batteries of the non-sealed type shall be stored in enclosures with outside vents or in well-ventilated rooms and be so arranged as to prevent the escape of fumes, gases, or electrolyte spray into other areas.

11.F.02 Ventilation shall be provided to ensure diffusion of battery gases to prevent the accumulation of an explosive mixture.

11.F.03 Battery storage and handling.

a. Racks and trays shall be substantial and shall be treated to make them resistant to the electrolyte.

b. Floors shall be of acid resistant construction or protected from accumulation of acid.

c. Facilities for quick drenching of the eyes and body shall be provided for emergency use within 25 ft (7.6 m) of battery handling areas. ***>See Section 06.B.02.b.(3).*** PPE shall be used as prescribed in Section 5.

d. Facilities shall be provided for flushing and neutralizing spilled electrolyte and for fire protection.

11.F.04 Battery charging.

a. Battery charging installations shall be located in areas designated for that purpose.

b. Charging apparatus shall be protected from mechanical damage.

c. When charging batteries, the vent caps shall be kept in place to avoid spray of electrolyte. Care shall be taken to assure vent caps are functioning.

d. Prior to charging batteries, the electrolyte level shall be checked and adjusted to the proper level if necessary.

11.G HAZARDOUS (CLASSIFIED) LOCATIONS

11.G.01 Locations of electrical equipment and wiring shall be classified on the properties of the flammable vapors, liquids or gases, or combustible dusts or fibers that may be present therein and the likelihood that a flammable or combustible concentration or quantity is present. In classifying locations, each room, section, or area shall be classified on an individual basis in accordance with the definitions given in Table 11-2.

11.G.02 All equipment, wiring methods, and installations of equipment in hazardous (classified) locations shall be either listed as intrinsically safe, listed for the hazardous location, or demonstrated to be safe for the location.

11.G.03 Only equipment and wiring listed as intrinsically safe shall be permitted in those hazardous (classified) locations.

11.G.04 Equipment and wiring listed for the hazardous (classified) location shall be approved not only for the class of location but also for the ignitable or combustion properties of the specific gas, vapor, dust, or fiber that will be present.

a. This equipment shall not be used unless it is marked to show the class, group, and operating temperature or temperature range for which it is approved.

b. With the following exceptions, the temperature marking shall not exceed the ignition temperature of the specific gas, vapor, dust, or fiber:

TABLE 11-2

HAZARDOUS (CLASSIFIED) LOCATIONS

Class I Highly flammable gases or vapors		Class II Combustible dusts		Class III Combustible fibers or flyings	
Division 1	Division 2	Division 1	Division 2	Division 1	Division 2
locations where hazardous concentrations are probable or where accidental occurrence should be simultaneous with failure of electrical equipment	locations where flammable concentrations are possible, but only in the event of process closures, rupture, ventilation failure, etc.	locations where hazardous concentrations are probable where their existences would be simultaneous with electrical equipment failure, or where electrically conducting dusts are involved	locations where hazardous concentrations are not likely, but where deposits of the dust might interfere with heat dissipation from electrical equipment or ignited by electrical equipment	locations in which easily ignitable fibers or materials producing combustible flyings are handled, manufactured or used	locations in which such fibers or flyings are stored or handled, except in the process of manufacture

Groups:

A - atmospheres containing acetylene
B - atmospheres containing hydrogen or gases or vapors of equivalent hazard
C - atmospheres containing ethyl-ether vapors, ethylene, or cyclopropane
D - atmospheres containing gasoline, hexane, naphtha, benzene, butane, propane, alcohol, acetone, benzol, or natural gas
E - atmospheres containing metal dust, including aluminum, magnesium, and other metals of equally hazardous characteristics
F - atmospheres containing carbon black, coke, or coal dust
G - atmospheres containing flour, starch, or grain dusts

(1) Equipment of the non-heat producing type (e.g., junction boxes and conduit) and equipment of the heat producing type having a maximum temperature of not more than 212 °F (100 °C) need not have a marked operating temperature or temperature range.

(2) Fixed lighting fixtures marked for use only in Class I, Division 2 locations need not be marked to indicate the group.

(3) Fixed general-purpose equipment in Class I locations, other than lighting fixtures, that is acceptable for use in Class II, Division 2, and Class III locations need not be marked with the class, group, division, or operating temperature.

(4) Fixed dust-tight equipment, other than lighting fixtures, that is acceptable for use in Class II, Division 2, and Class III locations need not be marked with the class, group, division, or operating temperature.

11.G.05 Equipment that is safe for the hazardous (classified) location shall be of a type and design that will provide protection from the hazards arising from the combustibility and flammability of vapors, liquids, gases, dusts, or fibers.

11.G.06 Equipment approved for a specific hazardous location shall not be installed or intermixed with equipment approved for another specific hazardous location.

11.G.07 All wiring components and utilization equipment required to be explosion proof (vapor, dust, or fiber tight) shall be maintained in that condition.

a. There shall be no loose or missing screws, gaskets, threaded connections, or other impairments to this tight condition.

b. Conduits shall be threaded and made wrench-tight: where it is impractical to make a threaded joint tight, a bonding jumper shall be used.

11.H POWER TRANSMISSION AND DISTRIBUTION

11.H.01 The requirements in this subsection and the pertinent requirements in the other subsections of this manual shall apply to the erection of new electric transmission and distribution lines and equipment, and the alteration, conversion, and improvement of existing electric transmission and distribution lines and equipment.

11.H.02 Before starting work, existing conditions shall be determined by an inspection or a test. Such conditions shall include, but not be limited to, location and voltage of energized lines and equipment, conditions of poles, and the location of circuits and equipment including power and communication lines and fire alarm circuits.

a. Electric equipment and lines shall be considered energized until determined to be de-energized by tests, or other means, and grounds applied.

b. New lines or equipment may be considered de-energized and worked as such where the lines or equipment are grounded or where the hazard of induced voltages is not present and adequate clearances or other means are implemented to prevent contact with energized lines or equipment.

c. Bare wire communication conductors on power poles or structures shall be treated as energized lines unless protected by insulating materials suitable for the highest voltage that may be accidentally applied to the line.

d. The operating voltage of equipment and lines shall be determined before working on or near energized parts.

11.H.03 Clearance requirements of either subparagraph a or b below shall be observed.

a. No employee shall be permitted to approach or take any conductive object without an approved insulating handle closer to exposed energized parts than shown in Table 11-3 (phase to ground) unless:

(1) The employee is insulated or guarded from the energized part (gloves or gloves with sleeves rated for the voltage involved shall be considered insulation of the employee from the energized part);

TABLE 11-3

ALTERNATING CURRENT - MINIMUM DISTANCES

Voltage range (phase-to-phase)	Minimum working and clear hot stick distance	
	(phase-to-ground)	(phase-to-phase)
2.1 - 15 kV	2.0 ft (0.6 m)	2.0 ft (0.6 m)
15.1 – 35 kV	2.3 ft (0.7 m)	2.3 ft (0.7 m)
35.1 – 46 kV	2.6 ft (0.8 m)	2.6 ft (0.8 m)
46.1 – 72.5 kV	3.0 ft (0.9 m)	3.0 ft (0.9 m)
72.6 - 121 kV	3.3 ft (1.0 m)	4.6 ft (1.4 m)
138 - 145 kV	3.6 ft (1.1 m)	4.9 ft (1.5 m)
161 - 169 kV	3.6 ft (1.1 m)	5.6 ft (1.7 m)
230 - 242 kV	4.9 ft (1.5 m)	8.2 ft (2.5 m)
345 - 362 kV	6.9 ft (2.1 m) *	13.1 ft (4.0 m) *
500 - 552 kV	10.8 ft (3.3 m) *	19.7 ft (6.0 m) *
700 - 765 kV	11.8 ft (3.6 m) *	30.5 ft (9.3 m) *

* for 345-362 kilovolt (kV), 500-552 kV, and 700-765 kV, the minimum working distance and the minimum clear hot stick distance may be reduced provided such distances are not less than the shortest distance between the energized part and a grounded surface.

(2) The energized part is insulated or guarded from the employee and any other conductive object at a different potential; or

(3) The employee is isolated, insulated, or guarded from any other conductive object(s), as during live-line, bare-hand work.

b. The minimum phase to ground working distance and minimum clear hot stick distances in Table 11-3 shall not be violated. The minimum clear hot stick distance refers to the distance from the hot end of live-line tools to the lineman when performing live-line work. Conductor support tools (such as link sticks, strain carriers, and insulator cradles) may be used provided the clear length of insulation is at least as long as the insulator string or as long as the minimum phase to ground distance in Table 11-3.

11.H.04 When de-energizing lines and equipment operated in excess of 600 volts, and the means of disconnecting from electric energy is not visibly open or visibly locked out, provisions a through g below are required.

a. The section of line or equipment to be de-energized shall be clearly identified and shall be isolated from all sources of voltage.

b. Notification and assurance from the GDA shall be obtained that:

(1) All switches and disconnectors through which electric energy may be supplied to the particular section of line or equipment to be worked have been de-energized,

(2) All switches and disconnectors are plainly tagged indicating that persons are at work, and

(3) All switches and disconnectors capable of being rendered inoperable are rendered inoperable.

c. After all designated switches and disconnectors have been opened, rendered inoperable, and tagged, visual inspections shall be conducted to ensure that equipment or lines are de-energized.

d. Protective grounds shall be applied on the disconnected lines or equipment to be worked on.

e. Guards or barriers shall be erected as necessary to adjacent energized lines.

f. When more than one independent crew requires the same or equipment to be de-energized, a prominent tag for each such independent crew shall be placed on the line or equipment by the designated employee in charge.

g. Upon completion of work on de-energized lines or equipment, each designated person-in-charge shall determine that all employees in the crew are clear and that protective grounds installed by the crew have been removed and shall report to the GDA that all tags and locks protecting the crew may be removed.

11.H.05 When opening or closing a disconnect switch or circuit breaker on a power transmission/distribution line, exposure to potential explosion shall be limited. Safe operating procedures shall be established to minimize the risk of explosion.

11.H.06 When a crew working on a line or equipment can clearly see that the means of disconnecting from electrical energy are visibly open or visibly locked-out, the following provisions are required.

a. Guards or barriers shall be erected as necessary to adjacent energized lines.

b. Upon completion of work on de-energized lines or equipment, each designated person-in-charge shall determine that all employees in the crew are clear that all protective

grounds installed by the crew have been removed and shall report to the GDA that all tags and locks protecting the crew may be removed.

11.H.07 Grounding.

a. De-energized conductors and equipment that are to be grounded shall be tested for voltage.

b. When attaching grounds, the ground end shall be attached first, and the other end shall be attached and removed by insulated tools or other suitable devices.

c. When removing grounds, the grounding device shall first be removed from the line or equipment using insulating tools or other suitable devices.

d. Grounds shall be placed between the work location and all sources of energy and as close as practicable to the work location, or grounds shall be placed at the work location.

(1) If work is to be performed at more than one location in a line section, the line section must be grounded and short circuited at one location in the line section and the conductor to be worked on shall be grounded at each work location.

(2) The minimum distance in Table 11-3 shall be maintained from ungrounded conductors at the work location.

(3) Where the making of a ground is impracticable, or the conditions resulting from it would be more hazardous than working on the lines or equipment without grounding, the grounds may be omitted and the line or equipment worked as energized.

e. Grounds may be temporarily removed only when necessary for test purposes and extreme caution shall be exercised during the test procedures. The lines or equipment from which grounds have been removed shall be considered energized.

f. When grounding electrodes are used, such electrodes shall have a resistance to ground low enough to remove the danger of harm to personnel or permit prompt operation of protective devices.

g. Grounding to tower shall be made with a tower clamp capable of conducting the anticipated fault current.

h. A ground lead, to be attached to either a tower ground or driven ground, shall be capable of conducting the anticipated fault current and shall have a minimum conductance of No. 2 American Wire Gauge (AWG) copper.

11.H.08 All hydraulic fluids used for the insulated sections of derricks, trucks, aerial lifts, and hydraulic tools that are used on or around energized lines and equipment shall be of the insulating type (the requirements for fire resistant fluids do not apply to hydraulic tools covered by this requirement).

11.H.09 Tools.

a. All hydraulic tools that are used on or around energized lines or equipment shall use non-conducting hoses having adequate strength for the normal operating pressures.

b. All pneumatic tools that are used on or around energized lines or equipment shall have non-conducting hoses of adequate strength for the normal operating pressures and have an accumulator on the compressor to collect moisture.

c. Portable metal or conductive ladders shall not be used near energized lines or equipment except in specialized work such as in high voltage substations where nonconductive ladders might present a greater hazard than conductive ladders. Conductive or metal ladders shall be prominently marked as conductive and all precautions shall be taken when used in specialized work.

d. Tape or rope measures that are metal or contain conductive strands shall not be used when working on or near energized parts.

11.H.10 Aerial lift trucks. **>*See Section 18 and 22.K.***

a. When working near energized lines or equipment, aerial lift trucks shall be grounded or barricaded and considered as energized equipment, or the aerial lift truck shall be insulated for the work being performed. Table11-3 will be legibly printed on a plate of durable non-conductive material and shall be mounted on the bucket or its vicinity so as to be visible to the operator of the boom.

b. Equipment or material shall not be passed between a pole or structure and an aerial lift while an employee working from the basket is within reaching distance of energized conductors or equipment that are not covered with insulating protective equipment.

11.H.11 With the exception of equipment certified for work on the proper voltage, mechanical equipment shall not be operated closer to any energized line or equipment than the clearances in Table 11-3 unless:

a. An insulated barrier is installed between the energized part and the mechanical equipment,

b. The mechanical equipment is grounded,

c. The mechanical equipment is insulated, or

d. The mechanical equipment is considered as energized.

11.H.12 Material handling and storage.

a. When hauling poles during the hours of darkness, illuminated warning devices shall be attached to the trailing end of the longest pole.

b. Materials and equipment shall not be stored under energized bus, energized lines, or near energized equipment if it is possible to store them elsewhere. If materials or equipment must be stored under energized lines or near energized equipment, clearance shall be maintained as in Table 11-3 and extraordinary caution shall be exercised in maintaining these clearances when operating equipment or moving materials near such energized equipment.

c. Tag lines shall be of a non-conducting type when used near energized lines.

11.H.13 Before climbing poles, ladders, scaffolds, or other elevated structures, an inspection shall determine that the structures are capable of sustaining the additional or unbalanced stresses to which they will be subjected. Poles or structures that may be unsafe for climbing shall not be climbed until made safe by guying, bracing, or other means.

11.H.14 Before installing or removing wire or cable, action will be taken as necessary to prevent the failure of poles and other structures.

11.H.15 When setting, moving, or removing poles by cranes, derricks, gin poles, A-frames, or other mechanized equipment near energized lines or equipment, precautions shall be taken to avoid contact with energized lines or equipment, except in bare hand, live-line work, or where barriers or protective devices are used.

11.H.16 Unless using protective equipment for the voltage involved, employees standing on the ground shall avoid contacting equipment or machinery working adjacently to energized lines or equipment.

11.H.17 Lifting equipment shall be bonded to an effective ground or it shall be considered energized and barricaded when used near energized equipment or lines.

11.H.18 Pole holes shall not be left unattended or unguarded.

11.H.19 Where necessary to assure the stability of mobile equipment, the location shall be graded and leveled.

11.H.20 When employees are working at two or more levels on a tower, activities shall be conducted such that there is a minimum exposure of employees to falling objects.

11.H.21 Guy lines shall be used to maintain sections or parts of tower sections in position and to reduce the possibility of tipping.

11.H.22 Tower members and sections being assembled shall be adequately supported.

11.H.23 No one shall be permitted under a tower that is in the process of erection or assembly, except as may be required to guide and secure the section being set.

11.H.24 When erecting towers using hoisting equipment adjacent to energized transmission lines, the lines shall be de-energized when practical. If the lines are not de-energized, minimum clearance distances shall be maintained as specified in Table 11-3 and extraordinary caution shall be exercised in maintaining these clearances when operating equipment or moving materials near such energized equipment.

11.H.25 The load line shall not be detached from a tower section until the section is adequately secured.

11.H.26 Except during emergency restoration procedures, tower erection shall be discontinued in high wind or other adverse weather conditions that could make the work hazardous. When work is conducted under such conditions, the AHA and the means for their control shall be delineated in an AHA.

11.H.27 Before stringing operations, a briefing shall be held to discuss the following:

a. The plan of operation,

b. The type of equipment to be used,

c. Grounding devices and procedures to be followed,

d. Crossover methods to be employed, and

e. Clearance authorizations that are required.

11.H.28 When there is a possibility of a de-energized conductor being installed or removed coming into accidental contact with an energized circuit or receiving a dangerous induced voltage buildup, the conductor being installed or removed shall be grounded or provisions made to insulate or isolate the employee.

11.H.29 If an existing line is de-energized, proper clearance authorization shall be secured and the line grounded on both sides of the crossover or the wire being strung or removed shall be considered and worked as energized.

11.H.30 When crossing over energized conductors in excess of 600 volts, ropes, nets or guard structures shall be installed unless provision is made to isolate or insulate the worker or the energized conductor. Where practical the automatic re-closing feature of the circuit-interrupting device shall be made inoperative. In addition, the line being strung shall be grounded on either side of the crossover or considered and worked as energized.

11.H.31 Conductors being strung or removed shall be kept under positive control by tension reels, guard structures, tie lines, or other means to prevent accidental contact with energized circuits.

11.H.32 Guard structure members shall be sound, of adequate dimension and strength, and adequately supported.

11.H.33 Catch-off anchors, rigging, and hoists shall be of ample capacity to prevent loss of the lines.

11.H.34 Reel handling equipment, including pulling and braking machines, shall have ample capacity, operate smoothly, and be leveled and aligned in accordance with the manufacturer's operating instructions.

11.H.35 The manufacturer's load rating shall not be exceeded for stringing lines, pulling lines, sock connections, and all load-bearing hardware and accessories.

11.H.36 Pulling lines and accessories shall be inspected regularly and replaced or repaired when damaged or when dependability may be doubtful.

11.H.37 Conductor grips shall not be used on wire rope unless designed for this application.

11.H.38 Employees shall not be permitted under overhead operations or on cross-arms while a conductor or pulling line is being pulled (in motion).

11.H.39 A transmission clipping crew shall have a minimum of two structures clipped between the crew and the conductor being sagged. When working on bare conductors, clipping and tying crews shall work between grounds at all times; the grounds shall remain intact until the conductors are clipped in, except on dead end structures.

11.H.40 Except during emergency restoration procedures, work from structures shall be discontinued when adverse weather (such as high wind or ice on structures) makes the work hazardous. Stringing and clipping operations shall be discontinued during an electrical storm in the vicinity.

11.H.41 Reliable communications between the reel tender and pulling rig operator shall be provided.

11.H.42 Each pull shall be snubbed or dead ended at both ends before subsequent pulls.

11.H.43 Before stringing parallel to an existing energized transmission line, a competent determination shall be made to ascertain whether dangerous induced voltage buildups will occur, particularly during switching and ground fault conditions. When there is a possibility that such dangerous induced voltage may exist, the employer shall comply with the provisions of 11.H.43 through 11.H.50 in addition to the provisions of 11.H.26 through 11.H.41 unless the line is worked as energized.

11.H.44 When stringing adjacent to energized lines, the tension stringing method or other methods that preclude unintentional contact between the lines being pulled and any person shall be used.

11.H.45 All pulling and tensioning equipment shall be isolated, insulated, or grounded.

11.H.46 A ground shall be installed between the tensioning reel setup and the first structure to ground each bare conductor, sub-conductor, and overhead ground conductor during stringing operations.

11.H.47 During stringing operations, each bare conductor, sub-conductor, and overhead ground conductor shall be grounded at the first tower adjacent to both the tensioning and pulling setup and in increments so that no point is more than 2 miles (mi) (3.2 kilometers (km)) from a ground.

a. The grounds shall be left in place until conductor installation is complete.

b. Such grounds shall be removed as the last phase of aerial cleanup.

c. Except moveable-type grounds, the grounds shall be placed and removed with a hot stick.

11.H.48 Conductors, sub-conductors, and overhead ground conductors shall be grounded at all dead-end or catch-off points.

11.H.49 A ground shall be located at each side and within 10 ft (3 m) of working areas where conductors, sub-conductors, or overhead ground conductors are being spliced at ground level. The two ends to be spliced shall be bonded to each other. Splicing should be carried out on either an insulated platform or a conductive metallic grounding mat bonded to both grounds. The grounding mat should be roped off and an insulated walkway provided for access to the mat.

11.H.50 All conductors, sub-conductors, and overhead ground conductors shall be bonded to any isolated tower where it may be necessary to complete work on the transmission line.

a. Work on dead-end towers shall require grounding on all de-energized lines.

b. Grounds may be removed as soon as the work is completed provided the line is not left open-circuited at the isolated tower at which work is being completed.

11.H.51 When performing work from the structure, clipping crews and all others working on conductors, sub-conductors, or overhead ground conductors shall be protected by individual grounds installed at every workstation.

11.H.52 Before using the live-line bare-hand technique on energized high-voltage conductors or parts, a check shall be made of:

a. The voltage rating of the circuit on which the work is to be performed,

b. The clearances to ground of lines and other energized parts of which work is to be performed, and

c. The voltage limitations of the aerial-lift equipment intended to be used.

11.H.53 Only tools and equipment designed, tested, and intended for live-line bare-hand work shall be used, and such tools and equipment shall be kept clean and dry.

11.H.54 All work shall be personally supervised by a person trained and qualified to perform live-line bare-hand work.

11.H.55 The automatic re-closing feature of circuit interrupting devices shall be made inoperative where practical before working on any energized line or equipment.

11.H.56 Work shall not be performed during electrical storms or when electrical storms are imminent.

11.H.57 A conductive bucket liner or other suitable conductive device shall be provided for bonding the insulated aerial device to the energized line or equipment.

a. The employee shall be connected to the bucket liner by conductive shoes, leg clips, or other suitable means; climbers shall not be worn while performing work from an aerial lift.

b. Where necessary, electrostatic shielding for the voltage being worked or conductive clothing shall be provided.

11.H.58 Before the boom is elevated, the outriggers on the aerial truck shall be extended and adjusted to stabilize the truck. The body of the truck shall be bonded to an effective ground or barricaded and considered as energized equipment.

11.H.59 Before moving an aerial lift into the work position, all controls (ground level and bucket) shall be checked and tested to determine that they are in proper working condition.

11.H.60 Electrical insulating components and systems of aerial devices that are rated and used as an insulating device shall be, after a thorough inspection of their condition and cleanliness, tested for compliance with their rating.

a. Tests shall be conducted in accordance with the manufacturer's recommendations.

b. Tests shall be conducted only by qualified persons who are knowledgeable of the hazards.

11.H.61 All aerial lifts to be used for live-line bare-hand work shall have dual controls (ground level and basket).

a. The basket controls shall be within easy reach of the employee in the basket. If a two-basket lift is used, access to the controls shall be within easy reach from either basket.

b. The ground level controls shall be located near the base of the boom and will permit override operation of equipment at any time.

c. Except in case of an emergency, ground level lift control shall not be operated unless permission has been obtained from the employee in the lift.

11.H.62 Before an employee contacts the energized part to be worked on, the conductive bucket liner shall be bonded to the energized conductor by a positive connection that shall remain attached to the energized conductor until the work on the energized circuit is completed.

11.H.63 The minimum clearances for live-line bare-hand work shall be as specified in Table 11-3.

a. These minimum clearances shall be maintained from all grounded objects and from lines and equipment at a different potential than that to which the insulated aerial device is bonded, unless such grounded objects or other lines and equipment are covered by insulated guards.

b. These distances shall be maintained when approaching, leaving, and when bonded to the energized circuit.

c. When approaching, leaving, or bonding to an energized circuit, the minimum distances in Table 11-3 shall be maintained among all parts of the insulated boom assembly and any grounded parts (including the lower arm or portions of the truck).

d. When positioning the bucket alongside an energized bushing or insulator string, the minimum line-to-ground clearances of Table 11-3 must be maintained among all parts of the bucket and the grounded end of the bushing or insulator string.

e. A minimum clearance table (as in Table 11-3) shall be printed on a plate of durable nonconductive material and mounted in the bucket or in its vicinity so as to be visible to the boom operator.

f. Only insulated measuring sticks shall be used to verify clearance distances.

11.H.64 Handlines between buckets, booms, and the ground are prohibited.

a. No conductive materials more than 36 in (91.4 cm) long shall be placed in the bucket, except for appropriate length jumpers, armor rods, and tools.

b. Nonconductive handlines may be used from line to ground when not supported from the bucket.

11.H.65 The bucket and boom shall not be over stressed by attempting to lift or support weights in excess of the manufacturer's rating.

11.I UNDERGROUND ELECTRICAL INSTALLATIONS

11.I.01 Guarding underground openings.

a. Warning signs and rigid barricades shall be promptly placed when covers of manholes, handholes, or vaults are removed.

b. When an employee enters an underground opening the opening shall be protected with a barricade, temporary cover, or other guard appropriate for the hazard.

c. Underground opening guards and warning signs shall be lighted at night.

11.I.02 Maintenance holes and unvented vaults shall be treated as, and subjected to the requirements of, confined spaces. **>** ***See 06.I.***

11.I.03 Smoking shall be prohibited in maintenance holes and vaults.

11.I.04 When open flames must be used in manholes, extra precautions shall be taken to provide ventilation.

11.I.05 Before using open flames in maintenance holes or vaults, the holes/vaults shall be tested and found safe or cleared of any combustible gases or liquids.

11.I.06 When underground facilities are exposed (electric, gas, water, telephone, etc., or cables other than the one being worked on), they shall be protected to avoid damage.

11.I.07 Before cutting into a cable or opening a splice, the cable shall be identified and verified to be the proper cable and de-energized.

11.I.08 When working on buried cable or on cable in manholes, metallic sheath continuity shall be maintained by bonding across the opening or by equivalent means.

11.J WORK IN ENERGIZED SUBSTATIONS

11.J.01 When working in an energized substation, authorization shall be obtained from the GDA before work is begun.

11.J.02 When work is to be done in an energized substation, the following shall be determined:

a. What facilities are energized, and

b. What protective equipment and precautions are necessary for the safety of personnel.

11.J.03 Extraordinary caution shall be exercised in the handling of bus bars, tower steel, materials, and equipment near energized facilities. The requirements in 11.H.03 shall be followed.

11.J.04 Only qualified employees shall perform work on or adjacent to energized control panels.

11.J.05 Precautions shall be taken to prevent accidental operation of relays or other protective devices due to jarring, vibration, or improper wiring.

11.J.06 Use of vehicles, gin poles, cranes, and other equipment in unguarded high voltage equipment areas shall at all times be controlled by qualified employees.

11.J.07 All mobile cranes and derricks shall be effectively grounded when being moved or operated near energized lines or equipment or the equipment shall be considered energized.

11.J.08 When a substation fence must be expanded or removed, a temporary fence affording similar protection, when the site is unattended, shall be provided. Adequate interconnection with ground shall be maintained between temporary fence and permanent fence.

11.J.09 All gates to all unattended substations shall be locked except when work is in progress.

11.J.10 When switching gang switches, visual inspection should be made to ensure all insulators and the switch handle ground are in

good condition. Insulating gloves must be worn when operating switch handles.

11.K COMMUNICATION FACILITIES

11.K.01 Employees shall not look into an open wave guide or antenna that is connected to an energized electromagnetic source.

11.K.02 If the electromagnetic radiation level within an accessible area exceeds the levels given in 06.F, of this manual, the area shall be posted with appropriate signs.

11.K.03 When an employee works in an area where the electromagnetic radiation could exceed the levels given in 06.F, of this manual, measures shall be taken that ensure that the employee's exposure is not greater than that permitted.

SECTION 12

CONTROL OF HAZARDOUS ENERGY (LOCKOUT/TAGOUT)

12.A GENERAL

12.A.01 Before an employee performs any servicing or maintenance on a system where the unexpected energizing, start up, or release of kinetic or stored energy could occur and cause injury or damage, the system shall be isolated in accordance with the requirements of this Section. Personnel and resources shall not be considered protected until hazardous energy control procedures have been implemented. ***> USACE employees shall comply with ER 385-1-31.***

12.A.02 Coordination.

a. All control activities shall be coordinated with and approved by the GDA.

b. When Contractors are planning the use of hazardous energy control procedures, they shall submit their hazardous energy control plan to the GDA for acceptance. Implementation of hazardous energy control procedures shall not be initiated until the hazardous energy control plan has been accepted by the GDA. ***> See 12.A.07***

c. The GDA and the Contractor designated authority shall fully coordinate their control activities with one another throughout the planning and implementation of these activities. Each shall inform the other of their energy control procedures, ensure that their own personnel understand and comply with rules and restrictions of their procedures, and ensure that their employees affected by the hazardous energy control activity are notified when the procedural steps outlined in the hazardous energy control plan are to be initiated.

12.A.03 A preparatory inspection with the GDA and Contractor personnel shall be conducted to ensure that all affected employees understand the energy hazards and the procedures for their control.

a. When energy control procedures affect both USACE and Contractor(s), all USACE and Contractor affected employees will participate in the preparatory inspection.

b. The preparatory meeting shall be documented. The time and date of the meeting, the subject matter discussed, and the name of all employees in attendance shall be recorded.

12.A.04 Lockout and tagout shall be performed only by authorized employees.

12.A.05 All employees affected by the lockout or tagout shall be notified, before and upon completion of, the application and removal of lockout or tagout devices.

12.A.06 Lockout and tagout devices.

a. Systems with energy isolating devices that are capable of being locked out shall use locking devices to control hazardous energy unless the GDA or the Contractor designated authority has demonstrated and documented all of the following:

(1) The use of locking devices would entail burdens that exceed any advantage to the use of lockout over the use of tagout devices,

(2) The use of tagout devices will provide full personnel protection (as defined in Appendix Q), and

(3) All affected employees can and will be informed that tagout is being used in lieu of lockout.

b. If an energy isolating device is not capable of being locked out, the hazardous energy control procedures shall use tagout providing full personnel protection, as follows:

(1) All tagout requirements of this regulation and of the hazardous energy control procedures shall be complied with;

(2) The tagout device shall be attached to the same location, if possible, that the lockout device would have been attached. If this is not possible then the tag shall be attached as close as safely possible to the device and in a position that will be immediately obvious to anyone attempting to operate the device; and

(3) Additional means (e.g., placement of the tag in a manner that inhibits operation of the energy isolating device, removal of an isolating circuit mechanism, blocking of a control switch, opening of an extra disconnecting device, removal of a valve handle to reduce the likelihood of inadvertent energization, etc.) shall be employed to provide a level of protection commensurate to that provided by a lockout device.

12.A.07 Hazardous energy control plan.

a. Hazardous energy control procedures shall be developed in a hazardous energy control plan.

b. The plan shall clearly and specifically outline the scope, purpose, authorization, rules, and techniques to be used for the control of hazardous energy, including, but not limited to, the following:

(1) A statement of the intended use of the procedure;

(2) Means of coordinating and communicating hazardous energy control activities;

(3) Procedural steps and responsibilities for shutting down, isolating, blocking, and securing systems to control hazardous energy;

(4) Procedural steps and responsibilities for the placement, removal, and transfer of lockout and tagout devices;

(5) Procedural steps and responsibilities for placing and tagging, and moving or removing and untagging, protective grounds;

(6) Requirements for testing the system to verify the effectiveness of isolation and lockout and tagout devices;

(7) A description of any emergencies that may occur during system lockout or tagout and procedures for safely responding to those emergencies;

(8) Requirements when authority for removal of hazardous energy control devices must be transferred from the authorized employee to another individual, and the names of the individuals qualified for receiving such transfer; and

(9) The means to enforce compliance with the procedures.

12.B TRAINING

12.B.01 Training shall be provided to ensure that the purpose and function of the hazardous energy control procedures are understood by employees and that employees possess the knowledge and skills required for the safe application, usage, and removal of energy controls.

a. Each authorized employee shall receive training in the recognition of hazardous energy sources, the type and magnitude of energy available in the workplace, and the methods and means for energy isolation and control.

b. Each affected employee shall be instructed in the purpose and use of the energy control procedures.

c. All incidental personnel shall be informed of the procedures and prohibitions relating to restarting or reenergizing systems which are locked or tagged out.

d. When tagout systems are used, employees shall be trained in the limitations of tags.

12.B.02 Employees shall be retrained in hazardous energy control procedures whenever:

a. There is a change in their job assignments, a change in systems or processes that present a new energy control hazard, or a change in energy control procedures; or

b. Periodic inspection reveals, or there is reason to suspect the presence of, inadequacies in or deviations from the employee's knowledge or use of energy control procedures.

12.B.03 The supervisor shall certify and document all training and retraining. Certification shall contain such information as the names of employees trained; the time, date, and location of training; the name of the trainer, etc.

12.C PERIODIC INSPECTIONS

12.C.01 Daily inspections shall be conducted to ensure that all requirements of the hazardous energy control procedures are being followed.

12.C.02 Inspections shall be documented and shall specify the system (location) where the energy control procedures were inspected, the date of the inspection, the names of employees performing and included in the inspections, and any deficiencies in complying with the hazardous energy control procedures.

12.D LOCKOUT AND TAGOUT DEVICES

12.D.01 Lockout and tagout devices shall:

a. Be capable of withstanding the environment that they are exposed to for the maximum period of time the exposure is expected, and

b. Indicate the identity of the employee applying the device.

12.D.02 Lockout devices shall, in addition to the requirements of 12.D.01, be substantial enough to prevent removal without the use of excessive force or unusual techniques (such as with the use of bolt cutters).

12.D.03 Tagout devices shall, in addition to the requirements of 12.D.01, meet all of the following requirements:

a. Have a standardized (within a project) print and format;

b. Be constructed and printed so that exposure to weather conditions, ultraviolet (UV) light, wet or damp locations, or corrosive environments will not cause the tag to deteriorate or the message to become illegible;

c. Be attached by means that are:

(1) Nonreusable;

(2) Substantial enough to prevent inadvertent or accidental removal;

(3) Attachable by hand;

(4) Self-locking;

(5) Nonreleasable, with a minimum unlocking strength of no less than 50 lb (22.6 kg); and

(6) Have the basic characteristics of being at least equivalent to a one-piece, all-environment-tolerant nylon cable tie; and

d. Warn against the hazardous condition resulting from system energization and include a legend such as "**DO NOT START,**" "**DO NOT OPEN,**" "**DO NOT CLOSE,**" "**DO NOT ENERGIZE,**" "**DO NOT OPERATE**," etc.

12.E APPLYING AND REMOVING LOCKOUT AND TAGOUT DEVICES

12.E.01 The authorized employee shall ensure that all energy isolating devices needed to control energy to, or within, the system are identified and that system is shut down, isolated, blocked, and secured in accordance with the hazardous energy control procedure.

12.E.02 Any system operated by a remotely controlled source will be completely isolated such that it cannot be operated by that or any other source.

12.E.03 The authorized employee shall affix lockout and/or tagout devices to each energy isolating device in accordance with the hazardous energy control procedure.

a. Lockout devices shall be affixed to each energy isolating device in a manner that will maintain the energy isolating device in the safe position.

b. Tagout devices shall be affixed in such a manner as will clearly indicate that the operation of movement of energy isolating devices from the safe position is prohibited.

12.E.04 In areas not under strict control of personnel involved with the hazardous energy control activities, and in areas with public access, padlocks or other positive controls must be installed on the isolation devices along with the appropriate tags.

12.E.05 Following the application of lockout or tagout devices to energy isolating devices, all potentially hazardous stored or residual energy shall be relieved, disconnected, restrained, discharged, or otherwise rendered safe.

a. Protective grounds shall be identified with safe clearance tags.

b. The authorized employee is responsible for ensuring the control of residual energy and for placing and tagging and removing or moving protective grounds in accordance with the requirements specified in the hazardous energy control procedures.

12.E.06 When there is a possibility of re-accumulation of stored energy to a hazardous level, verification of isolation shall be continued until the energy control procedure is complete.

12.E.07 Before starting work on systems that have been locked out or tagged out, the authorized employee shall verify that isolation and de-energization of the system have successfully been accomplished.

12.E.08 When tagout devices are used, employees shall be instructed in the following requirements and limitations of tags.

a. Tags must be legible and understood by all authorized and affected employees and incidental personnel.

b. Tags and their means of attachment must be made of materials that will withstand the environments encountered in the workplace.

c. Tags shall be securely attached to energy isolating devices so that they cannot become inadvertently or accidentally detached during use.

d. Tags shall not be removed without authorization of the authorized employee and shall never be bypassed, ignored, or otherwise defeated.

e. Tags are essentially warning devices affixed to energy isolating devices and do not provide the physical protection that is provided by a lock; tags may evoke a false sense of security.

12.E.09 Before lockout or tagout devices are removed and energy restored to the system, the authorized employee shall ensure that the following actions have been taken:

a. The work area has been inspected and all nonessential items (e.g., tools and materials) have been removed from the system, the system components are operationally intact, and all employees have been safely positioned or removed from the area; and

b. All affected employees have been notified that the lockout or tagout devices are about to be removed.

12.E.10 With the exception of the following conditions, each lockout and/or tagout device shall be removed from each energy isolating device by the authorized employee who applied the device. When this employee is not available, the device(s) may be removed by another individual appointed by, and under the direction of, the GDA or Contractor designated authority (as appropriate), provided that the following procedures are complied with:

a. The GDA or Contractor designated authority ensures that the individual appointed to remove lockout and/or tagout devices is knowledgeable of the scope and procedures of the safe clearance;

b. This individual and the requirements for transferring removal authority to him/her from the authorized individual are listed in the hazardous energy control plan;

c. Verification by the GDA or Contractor designated authority that the authorized employee who applied the device is not at the facility;

d. The GDA or Contractor designated authority makes all reasonable efforts to contact the authorized employee to inform him that the lockout and/or tagout devices are to be removed; and

e. The authorized employee is informed that the lockout and/or tagout devices have been removed before their resuming work at the facility.

SECTION 13

HAND AND POWER TOOLS

13.A GENERAL

13.A.01 Power tools shall be of a manufacture listed by a nationally-recognized testing laboratory for the specific application for which they are to be used.

13.A.02 Use, inspection, and maintenance.

a. Hand and power tools shall be used, inspected, and maintained in accordance with the manufacturer's instructions and recommendations and shall be used only for the purpose for which designed. A copy of the manufacturer's instructions and recommendations shall be maintained with the tools.

b. Hand and power tools shall be inspected, tested, and determined to be in safe operating condition before use. Continued periodic inspections shall be made to assure safe operating condition and proper maintenance.

c. Hand and power tools shall be in good repair and with all required safety devices installed and properly adjusted. Tools having defects that will impair their strength or render them unsafe shall be removed from service.

13.A.03 Guarding.

a. Power tools designed to accommodate guards shall be equipped with such guards. All guards must be functional.

b. Reciprocating, rotating, and moving parts of equipment shall be guarded if exposed to contact by employees or otherwise create a hazard.

13.A.04 When work is being performed overhead, tools not in use shall be secured or placed in holders.

13.A.05 Throwing tools or materials from one location to another or from one person to another, or dropping them to lower levels, shall not be permitted.

13.A.06 Only non-sparking tools shall be used in locations where sources of ignition may cause a fire or explosion.

13.A.07 Tools requiring heat treating or redressing shall be tempered, formed, dressed, and sharpened by personnel who are experienced in these operations.

13.A.08 The use of cranks on hand-powered winches or hoists is prohibited unless the hoists or winches are provided with positive self-locking dogs. Hand wheels with exposed spokes, projecting pins, or knobs shall not be used.

13.A.09 Hydraulic fluid used in powered tools shall retain its operating characteristics at the most extreme temperatures to which it will be exposed. ***>For underground use, see 26.D.07.***

13.A.10 Manufacturers' safe operating pressures for hydraulic hoses, valves, pipes, filters and other fittings shall not be exceeded.

13.A.11 All hydraulic or pneumatic tools that are used on or around energized lines or equipment shall have non-conducting hoses of adequate strength for the normal operating pressures.

13.A.12 When fuel-powered tools are used in enclosed spaces, the requirements for concentrations of toxic gases and use of PPE, as outlined in Sections 5 and 6 of this manual, shall apply.

13.A.13 Clothing.

a. PPE shall be used as outlined in Sections 5 and 6 of this manual.

b. Loose and frayed clothing, loose long hair, dangling jewelry (including dangling earrings, chains, and wrist watches) shall not be worn while working with any power tool.

13.A.14 See Section 11.C for grounding requirements.

13.A.15 The electrical power control shall be provided on each machine/power tool to make it possible for the operator to cut off the power for the machine/power tool without leaving the point of operation.

13.A.16 Where injury to the operator may result if motors were to restart after power failures, provisions shall be made to prevent machines/power tools from automatically restarting upon restoration of power.

13.A.17 Floor- and bench-mounted power tools shall be anchored or securely clamped to a firm foundation. Anchoring or securing shall be sufficient to withstand lateral or vertical movement.

13.B GRINDING AND ABRASIVE MACHINERY

13.B.01 With the exception of the following, abrasive wheels shall be used only on machines provided with safety guards: ***> see ANSI B74.2 for descriptions of abrasive wheel types***

a. Wheels used for internal work while within the work being ground;

b. Mounted wheels, 2 in (5 cm) and smaller in diameter, used in portable operations;

c. Types 16, 17, 18, 18R, and 19 cones and plugs and threaded hole pot balls where the work offers protection or where the size does not exceed 3 in (7.6 cm) in diameter by 5 in (12.7 cm) long;

d. Type 1 wheels not larger than 2 in (5 cm) in diameter and not more than 1/2 in (1.2 cm) thick, operated at peripheral speeds less than 1800 surface-feet per minute (ft/min) (9.1 surface-m/s) when mounted in mandrels driven by portable drills;

e. Type 1 reinforced wheels not more than 3 in (7.6 cm) in diameter and 1/4 in (0.6 cm) in thickness, operating at peripheral speeds not exceeding 9500 surface-ft/min (48.3 surface-m/s), if safety glasses and face shield protection are worn.

13.B.02 Tongue guards on hand held power grinders shall be adjustable to within 1/4 in (0.6 cm) of the constantly decreasing diameter of the wheel at the upper opening.

13.B.03 Grinding machines shall be supplied with power sufficient to maintain the spindle speed at safe levels under all conditions of normal operation.

13.B.04 Work or tool rests shall not be adjusted while the grinding wheel is in motion.

13.B.05 Tool rests on power grinders shall not be more than 1/8 in (0.3 cm) distance from the wheel.

13.B.06 All abrasive wheels shall be closely inspected and ring-tested before mounting: cracked or damaged grinding wheels shall be destroyed.

13.B.07 Grinding wheels shall not be operated in excess of their rated safe speed.

13.B.08 Floor stand and bench-mounted abrasive wheels used for external grinding shall be provided with safety guards (protective hoods).

a. The maximum angular exposure of the grinding wheel periphery and sides shall be not more than 90°, except that

when work requires contact with the wheel below the horizontal plane of the spindle the angular exposure shall not exceed 125°; in either case, the exposure shall begin not more than 65° above the horizontal plane of the spindle.

b. Safety guards shall be strong enough to withstand the effect of a bursting wheel.

13.C POWER SAWS AND WOODWORKING MACHINERY

13.C.01 All woodworking machinery shall be operated and maintained in accordance with ANSI 01.1.

13.C.02 Guarding.

a. Circular saws shall be equipped with guards that automatically and completely enclose the cutting edges, splitters, and anti kickback devices.

b. All portable power-driven circular saws shall be equipped with guards above and below the base plate or shoe. The upper and lower guards shall cover the saw to the depth of the teeth, except for the minimum arc required to permit the base to be tilted for bevel cuts and for the minimum arc required to allow proper retraction and contact with the work, respectively. When the tool is withdrawn from the work, the lower guard shall automatically and instantly return to the covering position.

c. Blades of planers and jointers shall be fully guarded and have cylindrical heads with throats in the cylinder.

d. Band saw blades shall be fully enclosed except at the point of operation.

e. Additional guarding requirements for fixed (non portable) woodworking machinery are contained in Appendix E.

13.C.03 Automatic feeding devices shall be installed on machines whenever possible. Feeder attachments shall have the feed rolls or other moving parts covered or guarded so as to protect the operator from hazardous points.

13.C.04 The operating speed shall be permanently marked on all circular saws more than 20 in (50.8 cm) in diameter or operating at over 10,000 peripheral ft/minute (min) (50.8 peripheral m/s).

a. Any saw so marked shall not be operated at a speed other than that marked on the blade.

b. When a marked saw is re-tensioned for a different speed, the marking shall be corrected to show the new speed.

13.C.05 Radial arm power saws shall be equipped with an automatic brake.

13.C.06 The table of radial arm or swing saws shall extend beyond the leading edge of the saw blade.

13.C.07 Radial arm power saws shall be installed in such a manner that the cutting head will return to the starting position when released by the operator. All swing cutoff and radial saws or similar machines that are drawn across a table shall be equipped with limit stops to prevent the leading edge of the tool from traveling beyond the edge of the table.

13.C.08 Each hand-fed crosscut table saw and each hand-fed circular ripsaw shall have a spreader to prevent the material from squeezing the saw or being thrown back on the operator.

13.C.09 Operating procedures.

a. Band saws and other machinery requiring warm-up for safe operation shall be permitted to warm up before being put into operation whenever the temperature is below 45 °F (7 °C).

b. A push-stick, block, or other safe means shall be used on all operations close to high-speed cutting edges.

c. The use of cracked, bent, or otherwise defective parts such as saw blades, cutters, or knives is prohibited.

d. A brush shall be provided for the removal of sawdust, chips, and shavings on all woodworking machinery.

e. Power saws shall not be left running unattended.

13.D PNEUMATIC TOOLS

13.D.01 Safety clips or retainers shall be installed and maintained on pneumatic impact tools to prevent dies and tools from being accidentally expelled from the barrel.

13.D.02 Pressure shall be shut off and exhausted from the line before disconnecting the line from any tool or connection.

13.D.03 Safety lashing shall be provided at connections between tool and hose and at all quick makeup type connections.

13.D.04 Hoses shall not be used for hoisting or lowering tools.

13.D.05 Airless spray guns of the type which atomize paints and fluids at high pressures (1,000 lb (453.5 kg) or more) shall be equipped with automatic or visible manual safety devices that will prevent pulling of the trigger to prevent release of the paint or fluid until the safety device is manually released. In lieu of the above, a diffuser nut that will prevent high-pressure velocity release while the nozzle tip is removed plus a nozzle tip guard that will prevent the tip from coming into contact with the operator, or other equivalent protection may be provided.

13.D.06 Impact wrenches shall be provided with a locking device for retaining the socket.

13.D.07 See Section 20 for pressurized equipment and systems requirements.

13.E EXPLOSIVE-ACTUATED TOOLS

13.E.01 Explosive-actuated (powder-actuated) tools shall meet the design requirements of ANSI A10.3.

13.E.02 Only qualified operators shall operate explosive-actuated tools. A qualified operator is one who has:

a. Been trained by an authorized instructor (one who has been trained, authorized, and provided an authorized instructor's card by the tool manufacturer or by an authorized representative of the tool manufacturer);

b. Passed a written examination provided by the manufacturer of the tool; and

c. Possesses a qualified operator's card supplied by the manufacturer and issued and signed by both the instructor and the operator.

13.E.03 Each tool shall be provided with the following:

a. A lockable container with the words "**POWDER-ACTUATED TOOL**" in plain sight on the outside and a notice reading "**WARNING - POWDER-ACTUATED TOOL TO BE USED ONLY BY A QUALIFIED OPERATOR AND KEPT UNDER LOCK AND KEY WHEN NOT IN USE**" on the inside;

b. Operator's instruction and service manual;

c. Power load and fastener charts;

d. Tool inspection record; and

e. Service tools and accessories.

13.E.04 Inspection and testing.

a. Daily inspection, cleaning, and testing shall be performed as recommended by the manufacturer.

b. Explosive-actuated tools shall be tested, in accordance with the manufacturer's recommended procedure, each day before loading to see that safety devices are in proper working condition.

c. Explosive-actuated tools shall be inspected, thoroughly cleaned, and tested after each 1,000 fastenings.

13.E.05 Explosive-actuated tools and the charges shall be secured at all times to prevent unauthorized possession or use.

13.E.06 Explosive-actuated tools shall not be loaded until just before the intended firing time. Neither loaded nor empty tools are to be pointed at any employees. Hands shall be kept clear of the open barrel end.

13.E.07 The use of explosive-actuated tools is prohibited in explosive or flammable atmospheres.

13.E.08 Fasteners shall not be driven:

a. Into soft or easily penetrable materials unless they are backed by a material that will prevent the fastener from passing through to the other side;

b. Into very hard or brittle material, such as cast iron, hardened steel, glazed or hollow tile, glass block, brick, <u>or</u> rock;

c. Into concrete unless the material thickness is at least three times the penetration of the fastener shank; or

d. Into spalled concrete.

13.E.09 The tool operator shall wear safety goggles or other face and eye protection.

13.F CHAIN SAWS

13.F.01 All chain saws shall have an automatic chain brake or kickback device.

13.F.02 The idle speed shall be adjusted so that the chain does not move when the engine is idling.

13.F.03 Operators will wear PPE. Eye, ear, hand, foot (safety shoes), and leg protection are required as a minimum.

13.F.04 Chain saws will not be fueled while running, while hot, or near an open flame. Saws will not be started within 10 ft (3 m) of a fuel container.

13.F.05 The operator will hold the saw with both hands during all cutting operations.

13.F.06 A chain saw must never be used to cut above the operators' shoulder height.

13.F.07 See Section 31 for tree maintenance and removal requirements.

13.G ABRASIVE BLASTING EQUIPMENT

13.G.01 Hose and hose connections shall be designed to prevent build up of static electricity.

13.G.02 All connections and nozzles shall be designed to prevent accidental disengagement. All connections shall be equipped with safety lashings. **>** ***See 20.A.16***

13.G.03 Nozzle attachments shall be of metal and fit on the outside of the hose. A deadman-type control device shall be

provided at the nozzle to cut off the flow if the operator looses control of hose. A support shall be provided on which the nozzle may be mounted when it is not in use.

13.G.04 Additional requirements on abrasive blasting are in Sections 5 and 6.

SECTION 14

MATERIAL HANDLING, STORAGE, AND DISPOSAL

14.A MATERIAL HANDLING

14.A.01 Employees shall be trained in and shall use safe lifting techniques.

14.A.02 Requirements for PPE are covered in Section 5.

14.A.03 Material handling devices shall be available for the material handling needs of an activity.

14.A.04 Whenever heavy or bulky material is to be moved, the material handling needs shall be evaluated in terms of weight, size, distance, and path of movement. The following hierarchy shall be followed in selecting a means for material handling:

a. Elimination of material handling needs by engineering,

b. Movement by mechanical device (e.g., lift truck, overhead crane, or conveyor),

c. Movement by manual means with handling aid (e.g., dollie or cart), or

d. Movement using safe lifting techniques. **>Reference NIOSH, *Work Practices Guide for Manual Lifting***

14.A.05 Materials will not be moved over or suspended above personnel unless positive precautions have been taken to protect the personnel from falling objects.

14.A.06 Where the movement of materials may be hazardous to persons, taglines or other devices shall be used to control the loads

being handled by hoisting equipment. These devices shall be nonconductive when used near energized lines.

14.B MATERIAL STORAGE

14.B.01 All material in bags, containers, bundles, or stored in tiers shall be stacked, blocked, interlocked, and limited in height so that it is stable and secured against sliding or collapse.

a. Material shall be stacked as low as practical and in no case higher than 20 ft (6 m) unless otherwise specified in this Section.

b. Storage of flammable and combustible materials is covered in Section 9.

14.B.02 Material stored inside buildings under construction shall not be placed within 6 ft (1.8 m) of any hoistway or floor opening, nor within 10 ft (3 m) of an exterior wall that does not extend above the material stored.

14.B.03 Accessways shall be kept clear.

14.B.04 Unauthorized persons shall be prohibited from entering storage areas. All persons shall be in a safe position while materials are being loaded or unloaded from railroad cars, trucks, or barges.

14.B.05 Material shall not be stored on scaffolds or runways in excess of needs for normal placement operations or in excess of safe load limits.

14.B.06 Noncompatible materials shall be segregated in storage.

14.B.07 Storage of lumber.

a. Storage of lumber during construction shall be in sections containing a maximum of 1 million board feet with at least a 10 ft (3 m) clearance from buildings.

b. Lumber shall be supported on stable sills and shall be stacked level, stable, and self-supporting.

c. Reusable lumber shall have all nails withdrawn before it is stacked for storage.

d. Lumber piles shall not exceed 20 ft (6 m) in height; lumber to be handled manually shall not be stacked more than 16 ft (4.8 m) high.

14.B.08 Storage of bagged materials.

a. Bagged materials shall be stacked by stepping back the layers and cross-keying the bags at least every 10 bags high.

b. Bags of cement and lime shall not be stacked more than 10 high without setback, except when restrained by walls of appropriate strength.

c. The bags around the outside of the stack shall be placed with the mouths of the bags facing the center of the stack.

d. During unstacking, the top of the stack shall be kept nearly level and the necessary setback maintained.

14.B.09 Storage of brick.

a. Brick shall be stacked on an even, solid surface.

b. Bricks stacks shall not be more than 7 ft (2.1 m) high. when stacked loose brick reaches a height of 4 ft (1.2 m), it shall be tapered back 2 in (5 cm) in every 1 ft (0.3 m) of height above the 4 ft (1.2 m) level.

c. Unitized brick (brick securely gathered into large standard packages and fastened with straps) shall not be stacked more than three units high.

14.B.10 Storage of floor, wall, and partition block.

a. Blocks shall be stacked in tiers on solid, level surfaces.

b. When masonry blocks are stacked higher than 6 ft (1.8 m), the stack shall be tapered back one-half block per tier above the 6 ft (1.8 m) level.

14.B.11 Storage of reinforcing and structural steel.

a. Reinforcing steel shall be stored in orderly piles away from walkways and roadways.

b. Structural steel shall be securely piled to prevent members sliding off or the pile toppling over.

14.B.12 Storage of cylindrical material.

a. Structural steel, poles, pipe, bar stock, and other cylindrical materials, unless racked, shall be stacked and blocked so as to prevent spreading or tilting.

b. Pipe, unless racked, shall not be stacked higher than 5 ft (1.5 m).

c. Either a pyramid or battened stack shall be used.

d. Where a battened stack is used, the outside pile or pole shall be securely chocked. Battened stacks shall be tapered back at least one pile or pole in each tier.

e. Unloading of round material shall be done so that no person is required to be on the unloading side of the carrier after the tie wires have been cut or during the unlocking of the stakes.

14.C HOUSEKEEPING

14.C.01 Work areas and means of access shall be maintained safe and orderly.

a. Sufficient personnel and equipment shall be provided to ensure compliance with all housekeeping requirements.

b. Work areas shall be inspected daily for adequate housekeeping and findings shall be recorded on daily inspection reports.

c. Work will not be allowed in those areas that do not comply with the requirements of this Section.

14.C.02 All stairways, passageways, gangways, and accessways shall be kept free of materials, supplies, and obstructions at all times.

14.C.03 Loose or light material shall not be stored or left on roofs or floors that are not closed in, unless it is safely secured.

14.C.04 Tools, materials, extension cords, hoses, or debris shall not cause tripping or other hazards.

14.C.05 Tools, materials, and equipment subject to displacement or falling shall be adequately secured.

14.C.06 Empty bags having contained lime, cement, and other dust-producing material shall be removed periodically as specified by the GDA.

14.C.07 Form and scrap lumber and debris shall be cleared from work areas and accessways in and around building storage yards and other structures.

14.C.08 Protruding nails in scrap boards, planks, and timbers shall be removed, hammered in, or bent over flush with the wood.

14.C.09 Storage and construction sites shall be kept free from the accumulation of combustible materials.

a. Weeds and grass shall be kept down.

b. A regular procedure shall be established for the cleanup of the areas as specified by the GDA.

c. Rubbish, brush, long grass, or other combustible material shall be kept from areas where flammable and combustible liquids are stored, handled, or processed.

14.C.10 Accumulation of liquids, particularly flammable and combustible liquids, on floors, walls, etc., is prohibited. All spills of flammable and combustible liquids shall be cleaned up immediately.

14.D MATERIAL DISPOSAL

14.D.01 Waste material and rubbish shall be placed in containers or, if appropriate, in piles.

14.D.02 Waste materials and rubbish shall not be thrown down from a height of more than 6 ft (1.8 m), unless the following are complied with:

a. The materials or rubbish are dropped through an enclosed chute constructed of wood or equivalent material. Chutes for debris shall be enclosed, except for openings equipped with closures at or about floor level for the insertion of materials. The openings shall not exceed 48 in (121.9 cm) in height measured along the wall of the chute. Openings shall be kept closed when not in use.

b. When debris cannot be handled by chutes, the area into which the material is dropped shall be enclosed with barricades not less than 42 in (106.6 cm) in height. Barricades shall be positioned to keep personnel from all debris landing areas. Signs warning of the hazard of falling material shall be posted at

all debris landing areas and at each level exposed to falling debris.

14.D.03 See Section 9 for burning requirements.

14.D.04 Separate covered, self-closing, nonflammable/non-reactive containers shall be provided for the collection of garbage, oily, flammable, and dangerous wastes.

a. The containers shall be labeled with a description of the contents.

b. The contents shall be properly disposed of daily.

14.D.05 Hazardous material waste (i.e., vehicle and equipment oils and lubricants, containers and drums for solvents, adhesives, etc.) shall be collected, stored, and disposed of in accordance with Federal, State, and local requirements.

SECTION 15

RIGGING

15.A GENERAL

15.A.01 Inspection and use.

a. Rigging equipment shall be inspected as specified by the manufacturer, by a competent person, before use on each shift and as necessary during its use to ensure that it is safe.

b. Defective rigging, as specified in Appendix F, shall be removed from service.

c. The use and maintenance of rigging equipment shall be in accordance with recommendations of the rigging manufacturer and the equipment manufacturer. Rigging equipment shall not be loaded in excess of its recommended safe working load.

d. Rigging equipment, when not in use, shall be removed from the immediate work area and properly stored and maintained in a safe condition.

15.A.02 Hoist rope shall not be wrapped around the load.

15.A.03 Running lines located within 6 ft - 6 in (1.9 m) of the ground or working level shall be guarded or the area restricted by physical barriers to preclude injury or injury from broken lines.

15.A.04 All eye splices shall be made in an approved manner. Rope thimbles of proper size shall be fitted in the eye, except that in slings the use of thimbles shall be optional.

15.A.05 When hoisting loads, a positive latching device shall be used to secure the load and rigging.

15.A.06 Hooks, shackles, rings, pad eyes, and other fittings that show excessive wear or that have been bent, twisted, or otherwise damaged shall be removed from service.

15.A.07 Custom designed grabs, hooks, clamps, or other lifting accessories for such units as modular panels, prefabricated structures, and similar materials shall be marked to indicate the safe working loads and shall be proof-tested, before use, to 125% of their rated load.

15.A.08 The practice of multiple lift rigging (Christmas tree lifting) is prohibited.

15.B WIRE ROPE

15.B.01 When two or more wires are broken or rust or corrosion is found adjacent to a socket or end fitting, the wire rope shall be removed from service or re-socketed. ***> Special attention shall be given to the inspection of end fittings on boom support, pendants, and guy ropes.***

15.B.02 Wire rope removed from service due to defects shall be cut up or plainly marked as unfit for further use as rigging.

15.B.03 Wire rope clips attached with U-bolts shall have the U-bolts on the unloaded (dead) or short end of the rope. The clip nuts shall be retightened immediately after initial load carrying use and at frequent intervals thereafter. ***> See Figures 15-1 and 15-2 and Table 15-1.***

15.B.04 When a wedge socket fastening is used, the unloaded (dead) or short end of the wire rope shall be looped back and secured to itself by a clip or have a separate piece of equal size wire rope attached with a clip or be properly secured to an extended wedge. The clip shall not be attached to the load (live) end. ***> See Figure 15-3.***

FIGURE 15-1

WIRE ROPE CLIP SPACING
(NOT TO BE USED FOR SLINGS)

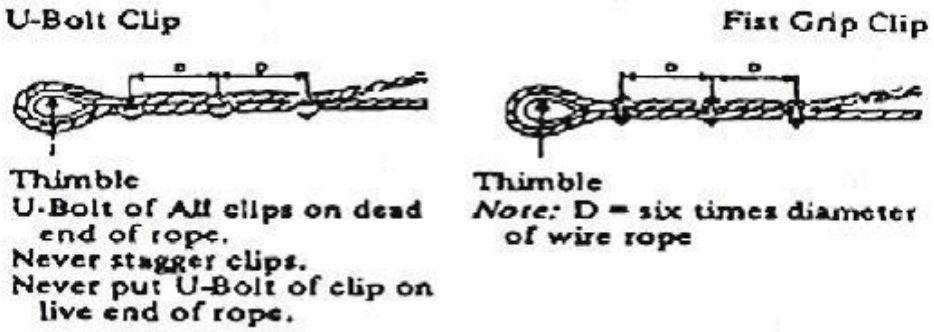

FIGURE 15-2

WIRE ROPE CLIP ORIENTATION
(NOT TO BE USED FOR SLINGS)

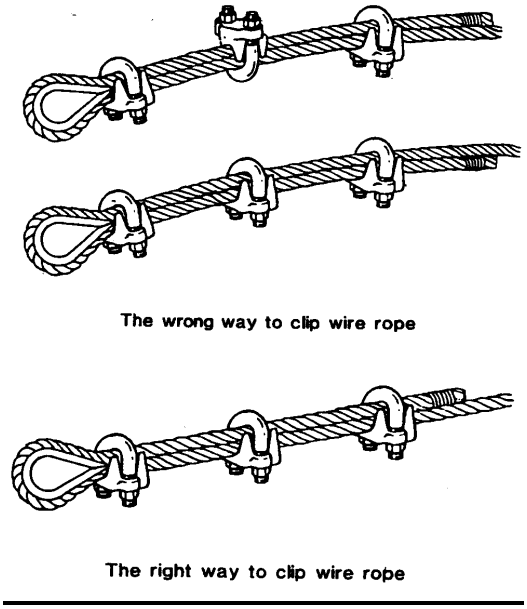

TABLE 15-1

NUMBER OF CLIPS AND THE PROPER TORQUE NECESSARY TO ASSEMBLE WIRE ROPE EYE LOOP CONNECTIONS WITH A PROBABLE EFFICIENCY NOT MORE THAN 80%

Rope diameter (in/cm)	Nominal size of clips (in/cm)	Number of clips	Torque to be applied to nuts of clips (ft-lb/N-m)
5/16 (0.7)	3/8 (0.9)	3	25 (33.9)
3/8 (0.9)	3/8 (0.9)	3	25 (33.9)
7/16 (1.0)	1/2 (1.2)	4	40 (54.3)
1/2 (1.2)	1/2 (1.2)	4	40 (54.3)
5/8 (1.5)	5/8 (1.5)	4	65 (88.2)
3/4 (1.9)	3/4 (1.9)	5	100 (135.7)
7/8 (2.2)	1 (2.5)	5	165 (223.9)
1 (2.5)	1 (2.5)	6	165 (223.9)
1 1/4 (3.1)	1 1/4 (3.1)	7	250 (339.3)
1 3/8 (3.4)	1 1/2 (3.8)	7	375 (508.9)
1 1/2 (3.8)	1 1/2 (3.8)	8	375 (508.9)
1 3/4 (4.3)	1 3/4 (4.3)	8	560 (760.0)

The spacing of clips should be 6 times the diameter of the wire rope. Thimbles shall be used if wire rope is to be spliced.

FIGURE 15-3

WEDGE SOCKET FASTENING

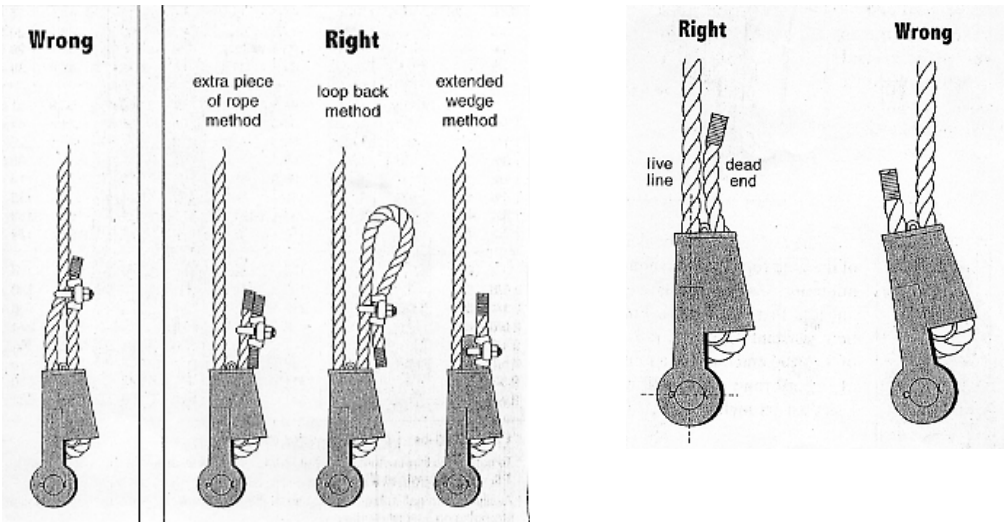

15.B.05 Protruding ends of strands in splices on slings and bridles shall be covered or blunted.

15.B.06 Except for eye splices in the ends of wires and for endless wire rope slings, wire rope used in hoisting, lowering, or pulling loads shall consist of one continuous piece without knot or splice.

a. An eye splice made in any wire rope shall have not less than five full tucks (this requirement shall not preclude the use of another form of splice or connection that can be shown to be as efficient and that is not otherwise prohibited).

b. Wire rope shall not be secured by knots except on haul back lines on scrapers.

15.B.07 Eyes in wire rope bridles, slings, or bull wires shall not be formed by wire rope clips or knots.

15.B.08 Wire rope clips shall not be used to splice rope.

15.C CHAIN

15.C.01 Only alloyed chain shall be used in rigging.

15.C.02 Chain shall be inspected before initial use and weekly thereafter.

15.C.03 When used with alloy steel chains, hooks, rings, oblong links, pear-shaped links, welded or mechanical coupling links, or other attachments shall have a rated capacity at least equal to that of the chain.

15.C.04 Job or shop hooks and links, makeshift fasteners formed from bolts and rods, and other similar attachments shall not be used.

15.D FIBER ROPE (NATURAL AND SYNTHETIC)

15.D.01 Fiber rope shall not be used if it is frozen or if it has been subjected to acids or excessive heat.

15.D.02 Fiber rope shall be protected from abrasion by padding where it is fastened or drawn over square corners or sharp or rough surfaces.

15.D.03 All splices in rope slings provided by the employer shall be made in accordance with fiber rope manufacturer's recommendations.

15.D.04 Eye splices.

a. In manila rope, eye splices shall contain at least three full tucks and short splices shall contain at least six full tucks (three on each side of the centerline of the splice).

b. In layed synthetic fiber rope, eye splices shall contain at least four full tucks and short splices shall contain at least eight full tucks (four on each side of the centerline of the splice).

15.D.05 Strand end tails shall not be trimmed short (flush with the surface of the rope) immediately adjacent to the full tucks: this applies to both eye and short splices and all types of fiber rope.

a. For fiber ropes less than 1 in (2.5 cm) diameter, the tails shall project at least six rope diameters beyond the last full tuck.

b. For fiber ropes 1 in (2.5 cm) diameter and larger, the tails shall project at least 6 in (15.2 cm) beyond the last full tuck.

In applications where the projecting tails may be objectionable, the tails shall be tapered and spliced into the body of the rope using at least two additional tucks (which will require a tail length of approximately six rope diameters beyond the last full tuck).

15.D.06 For all eye splices, the eye shall be sufficiently large to provide an included angle of not greater than 60° at the splice when the eye is placed over the load or support.

15.D.07 Knots shall not be used in lieu of splices.

15.E SLINGS ***> See Figure 15-4.***

15.E.01 Slings and their fittings and fastenings, shall be inspected before use on each shift and as necessary during use.

15.E.02 Protection shall be provided between the sling and sharp unyielding surfaces of the load to be lifted.

15.E.03 The use of slings will be such that the entire load is positively secured.

15.E.04 Lengths.

a. Wire rope slings shall have a minimum length of clear wire rope equal to ten times the rope diameter between each end fitting or eye splice.

FIGURE 15-4

SLING CONFIGURATIONS

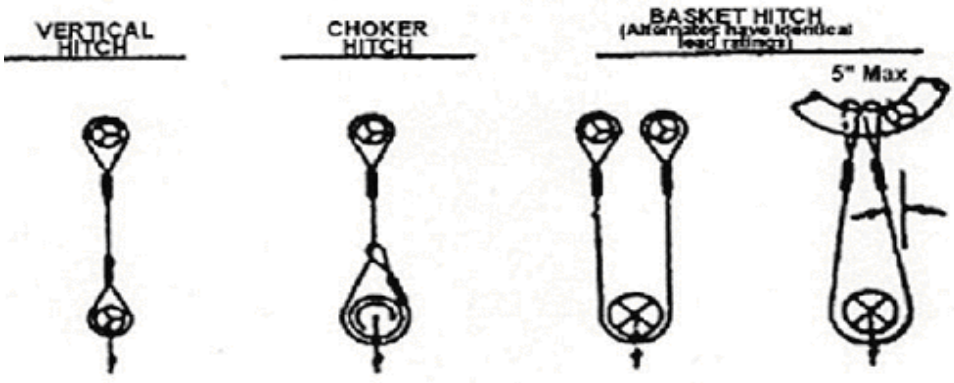

b. Braided slings shall have a minimum clear length of braided body equal to forty times the diameter of component ropes between each end fitting or eye splice.

15.E.05 Welded alloy steel chain slings shall have affixed durable permanent identification stating size, grade, rated capacity, and sling manufacturer.

15.E.06 Wire rope slings shall have affixed a durable permanent identification tag stating the diameter, rated load, lifting capacity in vertical, choker, basket configuration, and date placed in service.

15.E.07 The employer shall have each synthetic web sling marked or coded to show:

a. Name or trademark of the manufacturer,

b. Rated capacities for the type of hitch, and

c. Type of material.

15.F RIGGING HARDWARE

15.F.01 Drums, sheaves, and pulleys shall be smooth and free of surface defects that may damage rigging.

15.F.02 The ratio between the diameter of the rigging and the drum, block, sheave, or pulley tread diameter shall be such that the rigging will adjust itself to the bend without excessive wear, deformation, or damage.

15.F.03 In no case will the safe diameters of drums, blocks, sheaves, or pulleys be reduced in replacement of such items unless compensating changes are made in terms of the rigging used and the safe loading limits.

15.F.04 Drums, sheaves, or pulleys having eccentric bores, cracked hubs, spokes, or flanges shall be removed from service.

15.F.05 Connections, fittings, fastenings, and attachments used with rigging shall be of good quality, of proper size and strength, and shall be installed in accordance with recommendations of the manufacturer.

15.F.06 Shackles.

a. Table 15-2 shall be used to determine the safe working loads of various sizes of shackles, except that higher safe working loads are permissible when allowed by the manufacturer if a safety factor of at least five is maintained. Only marked shackles shall be used.

b. Shackles shall not be eccentrically loaded.

TABLE 15-2

SAFE WORKING LOADS FOR SHACKLES

Material size (in/cm)	Pin diameter (in/cm)	Safe working load (lb/kg)
1/2 (1.2 cm)	5/8 (1.5 cm)	2,800 (1,270 kg)
5/8 (1.5 cm)	3/4 (1.9 cm)	4,409 (2,000 kg)
3/4 (1.9 cm)	7/8 (2.2 cm)	6,393 (2,900 kg)
7/8 (2.2 cm)	1 (2.5 cm)	8,598 (3,900 kg)
1 (2.5 cm)	1 1/8 (2.8 cm)	11,199 (5,080 kg)
1 1/8 (2.8 cm)	1 1/4 (3.1 cm)	13,404 (6,080 kg)
1 1/4 (3.1 cm)	1 3/8 (3.4 cm)	16,424 (7,450 kg)
1 3/8 (3.4 cm)	1 1/2 (3.8 cm)	20,018 (9,080 kg)
1 1/2 (3.8 cm)	1 5/8 (4.1 cm)	23,810 (10,800 kg)
1 3/4 (4.3 cm)	2 (5 cm)	32,407 (14,700 kg)
2 (5 cm)	2 1/4 (5.5 cm)	42.549 (19,300 kg)

15.F.07 Hooks.

a. The manufacturer's recommendations shall be followed in determining the safe working loads of the various sizes and types of specific and identifiable hooks. Any hook for which the manufacturer's recommendations are not available shall be tested to twice the intended safe working load before it is put into use. The employer shall maintain a record of the dates and results of such tests.

b. Open hooks are prohibited in rigging used to hoist loads.

c. Hoisting hooks rated at 10 tons (9,072 kg) or larger shall be provided with a means for safe handling.

15.F.08 Drums.

a. Drums shall have sufficient rope capacity with recommended rope size and reeving to perform all hoisting and lowering functions.

b. At least three full wraps (not layers) of rope shall remain on the drum at all times.

c. The drum end of the rope shall be anchored by a clamp securely attached to the drum with an arrangement approved by the manufacturer.

d. Grooved drums shall have the correct groove pitch for the diameter of the rope. The depth of the groove shall be correct for the diameter of the rope.

(1) The flanges on grooved drums shall project beyond the last layer of rope a distance of either 2 in (5 cm) or twice the diameter of the rope, whichever is greater.

(2) The flanges on ungrooved drums shall project beyond the last layer of rope a distance of either 2 1/2 in (6.3 cm) or twice the diameter of the rope, whichever is greater.

15.F.09 Sheaves.

a. Sheaves shall be compatible with the size of rope used, as specified by the manufacturer.

b. Sheaves shall be inspected to ensure they are of correct size, properly aligned, lubricated, and in good condition.

c. When rope is subject to riding or jumping off a sheave, the sheave shall be equipped with cable-keepers.

15.F.10 Eye bolts.

a. Shoulderless eye bolts shall not be loaded at an angle.

b. Eye bolts shall only be loaded in the plain of the eye and shall not be loaded at angles of less than 45° to the horizontal.

SECTION 16

MACHINERY AND MECHANIZED EQUIPMENT

16.A GENERAL

16.A.01 Before any machinery or mechanized equipment is placed in use, it shall be inspected and tested in accordance with the manufacturer's recommendations and requirements of this manual and shall be certified in writing by a competent person to meet the manufacturer's recommendations and requirements of this manual. Subsequent reinspections will be conducted at least annually thereafter. All safety deficiencies noted during the inspection shall be corrected prior to the equipment being placed in service at the project. If at anytime the machinery or mechanized equipment is removed and subsequently returned to the project (other than equipment removed for routine off-site operations as part of the project), it shall be reinspected and recertified prior to use.

a. The Contractor shall keep records of tests and inspections. These records shall be made available in a timely manner upon request of the GDA and, when submitted, shall become part of the official project file.

b. The Contractor shall provide the GDA ample notice in advance of any equipment entering the site so that he/she may observe the Contractor's inspection process and so that spot checks may be conducted.

16.A.02 Daily/shift inspections and tests.

a. All machinery and equipment shall be inspected daily (when in use) to ensure safe operating conditions. The employer shall designate competent persons to conduct the daily inspections and tests.

b. Tests shall be made at the beginning of each shift during which the equipment is to be used to determine that the brakes

and operating systems are in proper working condition and that all required safety devices are in place and functional.

16.A.03 Whenever any machinery or equipment is found to be unsafe, or whenever a deficiency that affects the safe operation of equipment is observed, the equipment shall be immediately taken out of service and its use prohibited until unsafe conditions have been corrected.

a. A tag indicating that the equipment shall not be operated, and that the tag shall not be removed, shall be placed in a conspicuous location on the equipment. ***>See Section 8.*** Where required, lockout procedures shall be used. ***> See Section 12.***

b. The tag shall remain in its attached location until it is demonstrated to the individual deadlining the equipment that it is safe to operate.

c. When corrections are complete, the machinery or equipment shall be retested and re-inspected before being returned to service.

16.A.04 Machinery and mechanized equipment shall be operated only by designated qualified personnel.

a. Machinery or equipment shall not be operated in a manner that will endanger persons or property nor shall the safe operating speeds or loads be exceeded.

b. Getting off or on any equipment while it is in motion is prohibited.

c. Machinery and equipment shall be operated in accordance with the manufacturer's instructions and recommendations.

d. The use of headphones for entertainment purposes (e.g., AM/FM radio or cassette) while operating equipment is prohibited.

16.A.05 When the manufacturer's instructions or recommendations are more stringent than the requirements of this manual, the manufacturer's instructions or recommendations shall apply.

16.A.06 Inspections or determinations of road and shoulder conditions and structures shall be made in advance to assure that clearances and load capacities are safe for the passage or placing of any machinery or equipment.

16.A.07 Equipment requirements.

a. Seats or equal protection must be provided for each person required to ride on equipment.

b. Equipment operated on the highway shall be equipped with headlights, taillights, brake lights, backup lights, and turn signals that are visible from the front and rear.

c. All equipment with windshields shall be equipped with powered wipers. Vehicles that operate under conditions that cause fogging or frosting of windshields shall be equipped with operable defogging or defrosting devices.

d. Mobile equipment, operating within an off-highway job site not open to public traffic, shall have a service brake system and a parking brake system capable of stopping and holding the equipment while fully loaded on the grade of operation. In addition, it is recommended that heavy-duty hauling equipment have an emergency brake system that will automatically stop the equipment upon failure of the service brake system. This emergency brake system should be manually operable from the driver's position.

16.A.08 Maintenance and repairs.

a. Maintenance, including preventive maintenance, and repairs shall be in accordance with the manufacturer's recommendations and shall be documented. Records of

maintenance and repairs conducted during the life of a contract shall be made available upon request of the GDA.

b. All machinery or equipment shall be shut down and positive means taken to prevent its operation while repairs or manual lubrications are being done. Equipment designed to be serviced while running are exempt from this requirement.

c. All repairs on machinery or equipment shall be made at a location that will protect repair personnel from traffic.

d. Heavy machinery, equipment, or parts thereof that are suspended or held apart by slings, hoist, or jacks also shall be substantially blocked or cribbed before personnel are permitted to work underneath or between them.

16.A.09 Bulldozer and scraper blades, end-loader buckets, dump bodies, and similar equipment shall be either fully lowered or blocked when being repaired or when not in use. All controls shall be in a neutral position, with the engines stopped and brakes set, unless work being performed on the machine requires otherwise.

16.A.10 Stationary machinery and equipment shall be placed on a firm foundation and secured before being operated.

16.A.11 All mobile equipment and the areas in which they are operated shall be adequately illuminated while work is in progress.

16.A.12 Equipment powered by an internal combustion engine will not be operated in or near an enclosed area unless adequate ventilation is provided to ensure the equipment does not generate a hazardous atmosphere.

16.A.13 All vehicles that will be parked or are moving slower than normal traffic on haul roads shall have a yellow flashing light or four-way flashers visible from all directions.

16.A.14 No one shall be permitted in the truck cab during loading operations except the driver, and then only if the truck has a cab protector. ***> See also 18.B.17a.***

16.A.15 Mechanized equipment shall be shut down before and during fueling operations. Closed systems, with an automatic shut-off that will prevent spillage if connections are broken, may be used to fuel diesel powered equipment left running.

16.A.16 Towing.

a. All towing devices used on any combination of equipment shall be structurally adequate for the weight drawn and securely mounted.

b. Persons shall not be permitted to get between a towing vehicle and the piece of towed equipment until both have been completely stopped with all brakes set and wheels chocked on both vehicle and equipment.

16.A.17 All machinery or equipment operating on rails, tracks, or trolleys (except railroad equipment) shall be provided with substantial track scrapers or track clearers (effective in both directions) on each wheel or set of wheels.

16.A.18 Parking.

a. Whenever equipment is parked, the parking brake shall be set.

b. Equipment parked on an incline shall have the wheels chocked or track mechanisms blocked and the parking brake set.

c. All equipment left unattended at night, adjacent to a highway in normal use or adjacent to construction areas where work is in progress, shall have lights or reflectors, or barricades equipped with lights or reflectors, to identify the location of the equipment.

16.A.19 No modifications or additions that affect the capacity or safe operation of machinery or equipment shall be made without the manufacturer's written approval.

a. If such modifications or changes are made, the capacity, operation, and maintenance instruction plates, tags, or decals shall be changed accordingly.

b. In no case shall the original safety factor of the equipment be reduced.

16.A.20 Steering or spinner knobs shall not be attached to the steering wheel unless the steering mechanism prevents road reactions from causing the steering handwheel to spin. When permitted, the steering knob shall be mounted within the periphery of the wheel.

16.A.21 Safeguards shall be provided to prevent machinery and equipment operating on a floating plant from going into the water. ***> See also 16.F.06.***

16.A.22 All powered-industrial trucks shall meet the requirements of design, construction, stability, inspection, testing, maintenance, and operation defined in ANSI/ASME B56.1.

16.A.23 All powered-industrial trucks, lift trucks, stackers, and similar equipment shall have the rated capacity posted on the vehicle so as to be clearly visible to the operator. When the manufacturer provides auxiliary removable counterweights, corresponding alternate rated capacities also shall be clearly shown on the vehicle. The ratings shall not be exceeded.

16.A.24 Only trained and authorized operators shall be permitted to operate a powered-industrial truck. Training must be both classroom and practical operation of the same type of truck the student uses on the job. Training shall be provided in accordance with OSHA Standard 29 CFR 1910.178. The employer must certify that the operator has been trained and evaluated as required by the standard. The certification shall include the name of the operator,

the date of the training, the date of the evaluation, and the identity of the person(s) performing the training or evaluation. Refresher training shall be provided as indicated by the standard.

16.A.25 When a powered-industrial truck is left unattended, load engaging means shall be fully lowered, controls shall be neutralized, power shall be shut off, and brakes shall be set. Wheels shall be blocked if the truck is parked on an incline.

16.A.26 An overhead guard shall be used as protection against falling objects. It should be noted that an overhead guard is intended to offer protection from the impact of small packages, boxes, bagged material, etc., representative of the job application, but not to withstand the impact of a falling capacity load.

16.A.27 Dock board or bridge plates shall be properly secured before they are driven over. Dock board or bridge plates shall be driven over carefully and slowly and their rated capacity shall never be exceeded.

16.A.28 Under all travel conditions the powered-industrial truck shall be operated at a speed that will permit it to be brought to a stop in a safe manner.

16.A.29 On all grades the load and load engaging means shall be tilted back if applicable, and raised only as far as necessary to clear the road surface.

16.A.30 When ascending or descending grades in excess of 10%, loaded powered-industrial trucks shall be driven with the load upgrade.

16.A.31 The controls of loaders, excavators, or similar equipment with folding booms or lift arms shall not be operated from a ground position unless so designed.

16.A.32 Personnel shall not work in, pass under, or ride in the buckets or booms of loaders in operation.

16.A.33 Tire service vehicles shall be operated so that the operator will be clear of tires and rims when hoisting operations are being performed. Tires large enough to require hoisting equipment will be secured from movement by continued support of the hoisting equipment unless bolted to the vehicle hub or otherwise restrained. ***> Also see 16.B.06.***

16.A.34 Each bulldozer, scraper, dragline, crane, motor grader, front-end loader, mechanical shovel, backhoe, and other similar equipment shall be equipped with at least one dry chemical or CO_2 fire extinguisher with a minimum rating of 5-B:C.

16.A35 Fill hatches on water haul vehicles shall be secured or the opening reduced to a maximum of 8 in (20.3 cm).

16.B GUARDING AND SAFETY DEVICES

16.B.01 Reverse signal (back-up) alarm.

a. All self-propelled construction and industrial equipment, whether moving alone or in combination, shall be equipped with a reverse signal alarm. ***> Equipment designed and operated so that the operator is always facing the direction of motion does not require a reverse signal alarm.***

b. Reverse signal alarms shall be audible and sufficiently distinct to be heard under prevailing conditions.

c. Alarms shall operate automatically upon commencement of backward motion. Alarms may be continuous or intermittent (not to exceed 3-second intervals) and shall operate during the entire backward movement.

d. Reverse signal alarms shall be in addition to requirements for signal persons.

16.B.02 A warning device or signal person shall be provided where there is danger to persons from moving equipment, swinging loads, buckets, booms, etc.

16.B.03 Guarding.

a. All belts, gears, shafts, pulleys, sprockets, spindles, drums, flywheels, chains, or other reciprocating, rotating, or moving parts of equipment shall be guarded when exposed to contact by persons or when they otherwise create a hazard.

b. All hot surfaces of equipment, including exhaust pipes or other lines, shall be guarded or insulated to prevent injury and fire.

c. All equipment having a charging skip shall be provided with guards on both sides and open end of the skip area to prevent persons from walking under the skip while it is elevated.

d. Platforms, foot walks, steps, handholds, guardrails, and toe boards shall be designed, constructed, and installed on machinery and equipment to provide safe footing and access ways.

e. Equipment shall be provided with suitable working surfaces of platforms, guard rails, and hand grabs when attendants or other employees are required to ride for operating purposes outside the operator's cab or compartment. Platforms and steps shall be of nonskid material.

f. Substantial overhead protection shall be provided for the operators of forklifts and similar material handling equipment.

16.B.04 Fuel tanks shall be located in a manner that will not allow spills or overflows to run onto engine, exhaust, or electrical equipment.

16.B.05 Exhaust or discharges from equipment shall be so directed that they do not endanger persons or obstruct the view of the operator.

16.B.06 A safety tire rack, cage, or equivalent protection shall be provided and used when inflating, mounting, or dismounting tires

installed on split rims, or rims equipped with locking rings of similar devices. ***> Also see 16.A.33.***

16.B.07 No guard, safety appliance, or device shall be removed from machinery or equipment, or made ineffective, except for making immediate repairs, lubrications, or adjustments, and then only after the power has been shut off. All guards and devices shall be replaced immediately after completion of repairs and adjustments and before power is turned on.

16.B.08 Seatbelts and anchorages meeting the requirements of 49 CFR 571 shall be installed and worn in all motor vehicles (installation and usage on buses is optional). Two-piece seat belts and anchorages for construction equipment shall comply with applicable Federal specifications or Society of Automotive Engineers (SAE) Standard J386.

16.B.09 All high rider industrial trucks shall be equipped with overhead guards that meet the structural requirements defined in paragraph 4.21 of ANSI/ASME B56.1.

16.B.10 Suitable protection against the elements, falling or flying objects, swinging loads, and similar hazards shall be provided for operators of all machinery or equipment. Glass used in windshields or cabs shall be safety glass.

16.B.11 Falling object protective structures (FOPS).

a. All bulldozers, tractors, or similar equipment used in clearing operations shall be provided with guards, canopies, or grills to protect the operator from falling and flying objects as appropriate to the nature of the clearing operations.

b. FOPS for other construction, industrial, and grounds-keeping equipment will be furnished when the operator is exposed to falling object hazards.

c. FOPS will be certified by the manufacturer or a licensed engineer as complying with the applicable recommended practices of SAE Standards J231 and J1043.

16.B.12 Rollover protective structures (ROPS).

a. In addition to the requirements of 16.B.08 and 16.B.11, seat belts and ROPS shall be installed on:

(1) Crawler and rubber-tire tractors including dozers, push and pull tractors, winch tractors, and mowers;

(2) Off-the-highway self-propelled pneumatic-tire earth movers such as trucks, pans, scrapers, bottom dumps, and end dumps;

(3) Motor graders;

(4) Water tank trucks having a tank height less than the cab; and

(5) Other self-propelled construction equipment such as front-end loaders, backhoes, rollers, and compactors.

b. ROPS are not required on:

(1) Trucks designed for hauling on public highways;

(2) Crane-mounted dragline backhoes;

(3) Sections of rollers and compactors of the tandem steel-wheeled and self-propelled pneumatic tired type that do not have an operator's station;

(4) Self-propelled, rubber-tired lawn and garden tractors and side boom pipe laying tractors operated solely on flat terrain (maximum 10° slope; 20° slope permitted when off-loading from a truck) not exposed to rollover hazards; and

(5) Cranes, draglines, or equipment on which the operator's cab and boom rotate as a unit.

c. ROPS may be removed from certain types of equipment when the work cannot be performed with the ROPS in place and when ROPS removal is justified and delineated in an AHA and accepted in writing by the GDA.

d. The operating authority shall furnish proof from the manufacturer or certification from a licensed engineer that the ROPS complies with SAE Standards J167, J1040, J1042, J1084, and J1194, as applicable.

e. ROPS shall also be acceptable if they meet the criteria of any State that has a Department of Labor approved OSHA program or meet Water and Power Resources Service requirements.

f. The following information permanently affixed to the ROPS is acceptable in lieu of a written certification:

(1) Manufacturer’s or fabricator's name and address;

(2) ROPS model number, if any; and

(3) Machine make, model, or series number that the structure is designed to fit.

g. Field welding on ROPS shall be performed by welders who are certified by the contractor as qualified in accordance with ANSI/AWS D1.1, Naval Sea Systems Command (NAVSEA) S9074-AQ-GIB-010/248, or the equivalent.

16.B.13 All points requiring lubrication during operation shall have fittings so located or guarded to be accessible without hazardous exposure.

16.B.14 All machinery or equipment and material hoists operating on rails, tracks, or trolleys shall have positive stops or limiting devices either on the equipment, rails, tracks, or trolleys to prevent overrunning safe limits.

16.B.15 Under the following circumstances, long-bed end-dump trailers used in off-road hauling should be equipped with a roll-over warning device. The device should have a continuous monitoring display at the operator station to give the operator a quick and easily read indicator and audible warning of an unsafe condition.

a. The material being dumped is subject to being stuck or caught in the trailer rather than exiting the bed freely, and

b. The dumpsite cannot be maintained in a nominally level condition (lateral slope less than 1° - 2°).

16.C CRANES AND DERRICKS - GENERAL

16.C. 01 Unless otherwise specified, the requirements of this Section are applicable to all cranes and derricks of the types listed in Table 16-1.

16.C.02 Every crane shall have the following documents with them (in the cab) at all times they are to be operated:

a. A copy of the operating manual developed by the manufacturer for the specific make and model of the crane; a copy of the operating manual for any crane operator aids with which the crane is equipped.

b. A copy of the load-rating chart for the crane/derrick in use (separate or included in the operating manual), which shall include:

(1) The crane make and model, serial number, and year of manufacturer;

(2) Load ratings for all crane operating configurations, including optional equipment;

(3) Recommended reeving for the hoist line; and

(4) Operating limits in windy or cold weather conditions.

c. A durable load chart with legible letters and figures shall be fixed at a location visible to the operator while seated at the control station.

d. The crane's log book, which shall be used to record operating hours and all crane inspections, tests, maintenance, and repair. The log shall be updated daily as the crane is used and shall be signed by the operator and supervisor. Service mechanics shall sign the log after conducting maintenance or repairs on the crane.

16.C.03 Responsibilities in crane operations.

a. The operator shall not engage in any activity that will divert his/her attention while operating the crane.

b. The operator shall not leave the controls while a load is suspended.

c. Before leaving the crane unattended, the operator shall:

(1) Land any load, bucket, lifting magnet, or other device;

(2) Disengage the master clutch;

(3) Set travel, swing, boom brakes, and other locking devices;

(4) Put the controls in the off or neutral position;

(5) Secure the crane against accidental travel; and

(6) Stop the engine.

Exception: When crane operation is frequently interrupted during a shift and the operator must leave the crane. Under these circumstances, the engine may remain running and the following conditions (including those in paragraphs (1) thru (5)) shall apply:

(a) The operator shall be situated where unauthorized entry of the crane can be observed; and

(b) The crane shall be located within an area protected from unauthorized entry.

d. The operator shall respond to signals from the person who is directing the lift or an appointed signal person. When a signal person is not used in the crane operation, the operator shall ensure he/she has full view of the load and the load travel paths at all times the load is rigged to the crane.

e. Each operator is responsible for those operations under his/her direct control, including those items under f, below. Whenever there is any doubt as to safety, the operator shall consult his/her supervisor before commencing the operation.

f. Except for critical lifts, when these duties will be carried out by the lift supervisor, the rigger shall ensure that:

(1) The crane is level and, where necessary, blocked;

(2) The load is well secured and balanced in the sling or lifting device before it is lifted more than a few inches;

(3) The lift and swing path is clear of obstructions and adequate clearance is maintained from electrical sources; and

(4) All persons are clear of the swing radius of the counterweight.

g. When two or more cranes are used to lift one load, one designated person shall be responsible for the operation.

(1) The designated person shall analyze the operation and instruct all personnel involved in the proper positioning, rigging of the load, and the movements to be made.

(2) The designated person shall make such determinations as the necessity to reduce crane ratings, load position, boom location, ground support, and speed of movement, which are required to safely make the lift.

(3) The designated person shall ensure that all prescribed communication (including signaling) personnel and/or equipment are on hand and properly functioning, and that all personnel involved with the crane operation understand the communication systems and their responsibilities associated with communications.

16.C.04 Operator designation.

a. Only qualified, designated persons may operate cranes or derricks. Only those operators qualified to operate a particular type of crane or derrick may operate that type of machinery: proof of qualification shall be in writing. In addition to fully qualified crane operators, the following personnel may be designated to operate cranes under limited conditions:

(1) Trainees under the direct supervision of the designated operator of the crane;

(2) Maintenance personnel who have completed all operator trainee qualification requirements. Operation is limited only to those functions necessary to perform maintenance or verify performance of a crane; and

(3) Inspectors who have completed all operator trainee qualification requirements. Operation is limited only to functions necessary to accomplish inspection.

b. Each USACE Command with USACE employees designated as crane or derrick operators shall designate a qualified individual(s) (in-house or contract) to administer examinations and to qualify USACE (but not Contractor) operators.

c. Contractor crane and derrick operators shall be designated as qualified by a professional crane/derrick training or certification source that qualifies crane and derrick operators (e.g., an independent testing and qualifying company, a union, a governmental agency, or a qualified consultant (can be an in-house resource)).

16.C.05 Operator qualifications and training.

a. Proficiency qualifications.

(1) All operators, Government or Contractor, shall be instructed in and qualified for each type of crane or derrick he/she is to operate.

(2) Qualification for all crane/derrick operators shall be by written (or oral) and practical operating examination unless the operator is licensed by a State or city licensing agency for the particular type of crane or derrick. (Qualification for crane or derrick operators shall be valid for no longer than 5 years from the date of issuance. Prior to re-issuance of qualification, crane/derrick operators must have attended at least 8 hours of crane/derrick safety training; passed an operational examination; and pass a physical examination within 2 years.) ***See Appendix G.***

(3) As a minimum, the qualifying examination procedures in Appendix G shall be followed for all crane/derrick operators. When the crane manufacturer recommends operator

qualifying examination procedures, those procedures shall be in addition to the requirements of Appendix G.

b. All crane/derrick operators shall meet the physical qualifications listed in Appendix G. Physical examinations for operators are required to be conducted at least biennially and any time thereafter if indicated by a medical condition that may impact on the safe operation of a crane/derrick. Written proof, signed by a physician stating that the crane/derrick operator has had a physical examination and meets the medical requirements set forth in Appendix G, shall be submitted to the GDA for acceptance prior to allowing a crane/derrick operator to operate a crane/derrick.

c. USACE crane and derrick operators (not Contractor) shall complete a crane operators' course (that is at least 24 hours in length) that covers general crane operation and safety. Yearly thereafter, operators shall complete an 8-hour refresher course covering safe operation of the type of crane or derrick they operate.

16.C.06 Crane and Derrick Design and Construction Standards.

a. Cranes and derricks shall be designed and constructed in accordance with the applicable ANSI/ASME standards in effect at the time of initial construction listed in Table 16-1, and the additional requirements of this manual, whichever is more stringent.

b. Modification of existing cranes and derricks shall be performed in accordance with the current ANSI/ASME standards. It is not the intent of this manual to require immediate retrofitting of existing equipment.

TABLE 16-1

CRANE DESIGN AND CONSTRUCTION STANDARDS

CRANE DESIGN	CONSTRUCTION STANDARDS
Mobile and locomotive cranes	ANSI/ASME B30.5
Portal, tower, and pillar cranes	ANSI/ASME B30.4
Hammerhead tower cranes	ANSI/ASME B30.3
Floating cranes and floating derricks	ANSI/ASME B30.8, or ABS or ANSI/API 2C or SAE Standard J1366
Draglines	Power Crane and Shovel Association Standard No. 4
Articulating boom cranes	ANSI/ASME B30.22
Overhead and gantry cranes (top running bridge, single or multiple girder, top running trolley hoist)	ANSI/ASME B30.2
Overhead and gantry cranes (top running bridge, single girder, underhung hoist)	ANSI/ASME B30.17
Monorails and underhung cranes	ANSI/ASME B30.11
Derricks	ANSI/ASME B30.6
Helicopter cranes	ANSI/ASME B30.12

16.C.07 Cranes and derricks shall be operated, inspected, tested and maintained in accordance with the manufacturer's operating manual for the crane and the applicable ANSI/ASME codes or OSHA requirements, whichever is more stringent.

16.C.08 An AHA shall be developed and implemented for crane set-up and set-down procedures (mobilization, assembly or erection, dismantling, and demobilization).

16.C.09 Clearances.

a. Adequate clearance shall be maintained from electrical sources. ***> See Section 11.***

b. Overhead and gantry cranes clearances shall be in accordance with the Crane Manufacturer's Association of America (CMAA) 70.

c. All other cranes.

(1) Adequate clearance shall be maintained between moving and rotating structures of the crane and fixed objects to allow the passage of employees without harm. The minimum adequate clearance is 16 in (40.6 cm).

(2) Accessible areas within the swing radius of the rear of the crane's rotating superstructure, either permanently or temporarily mounted, shall be barricaded to prevent an employee from being struck or crushed by the crane.

16.C.10 Hoisting ropes shall be installed in accordance with ANSI/ASME standards and the equipment manufacturer's recommendations.

a. Overhead and gantry cranes shall have at least two full wraps of cable on the drums of hoisting equipment at all times.

b. All other cranes shall have at least three full wraps (not layers) of cable on the drums of hoisting equipment at all times.

c. The drum end of the rope shall be anchored to the drum by an arrangement specified by the crane or rope manufacturer.

16.C.11 Communications.

a. A standard signal system shall be used on all cranes and derricks. ***> See Section 8.***

b. In situations where the operator cannot see the load, audio (radio) communications shall be used (note that this does not preclude the use of hand signals in addition to audio). In all other operations, audio communications should be used.

16.C.12 Inspections.

a. Inspections of cranes and derricks shall be in accordance with applicable ANSI/ASME standards, OSHA regulations, and the manufacturer's recommendations.

b. A qualified person shall conduct inspections that cover, at the minimum, the items listed in Appendix H.

c. The Contractor shall notify the GDA at least 24 hours prior to any inspections/tests so that the GDA may be available to observe the inspection/test. There are basically five types of inspections:

(1) Initial inspection. Before initial use, a qualified person shall inspect all new and altered cranes to ensure compliance with all applicable standards.

(2) Functional test inspection. Before every operation (at the beginning of each shift) of the crane, the operator or designated person shall conduct start-up (pre-operational) inspections as follows:

(a) Overhead and gantry cranes. A visual and audible examination of the crane shall be conducted. Items to be functionally tested are the controls and the upper limit. Documentation of the test shall be noted in the operator's log.

(b) All other cranes and derricks. If checklists are used for start-up (pre-operational) inspections, a copy of the checklist shall be maintained at the project site. If checklists are not used, the operator or designated person shall indicate the successful completion of the

inspection (in accordance with the manufacturer's recommendations) in the operator's log

(3) Frequent inspection. A frequent inspection is a visual and audible examination of the crane. The crane operator or designated person shall conduct a frequent inspection as follows:

(a) Normal service – Monthly

(b) Heavy service – Weekly to monthly

(c) Severe service – Daily to weekly

(4) Periodic inspection. A periodic inspection is a visual and audible examination of the crane. The crane operator or designated person shall conduct a periodic inspection as follows:

(a) Normal service – Yearly

(b) Heavy service – Yearly

(c) Severe service – Quarterly

(5) Inspection of cranes not in regular use.

(a) Infrequent service cranes that have been idle for a period of 1 month or more, but less than 1 year, shall be inspected in accordance with 16.C.12c(3).

(b) Infrequent service cranes that have been idle for a period of 1 year or more shall be inspected in accordance with 16.C.05c(4). Infrequent service cranes that are exposed to adverse environmental conditions shall be inspected more frequently, as determined by the GDA or the Contractor with the concurrence of GDA.

16.C.13 Testing. ***> See also 16.D.06a.***

a. A qualified person shall conduct performance tests in accordance with ANSI/ASME, OSHA, and the manufacturer's recommendations. At the minimum, performance testing shall meet the requirements listed in Appendix I. Test loads shall not be less than 110% of the anticipated load and shall not exceed 100% of the manufacturer's load rating capacity chart at the configuration of the test, except for manufacturer testing of new cranes, which shall be conducted in accordance with the ANSI/ASME standards B30.1 through B30.17 as appropriate for the crane.

b. Performance testing after the replacement of wire rope is not required.

c. Written reports of the performance test, showing test procedures and confirming the adequacy of repairs or alterations, shall be maintained with the crane or derrick or at the on-site project office.

(1) Operational performance test. Operational tests shall be conducted in accordance with Appendix I:

(a) Before initial use of a crane(s) in which a load bearing (excluding the rope) or load controlling part or component, brake, travel component, or clutch have been altered, replaced, or repaired;

(b) Every time a crane(s) is reconfigured or re-assembled after disassembly (to include booms);

(c) Every time a crane is brought onto a USACE project; and

(d) Every year.

> Under conditions (a) and (b), a selective operational performance test (testing only those components that

have or may have been affected by the alteration, replacement, repair, reconfiguration, or reassembly) may be performed.

(2) Load performance test. Load performance tests shall be conducted in accordance with Appendix I:

(a) Before initial use of cranes in which a load bearing (excluding the rope) or load controlling part or component, brake, travel component, or clutch have been altered, replaced, or repaired;

(b) Every time the crane is reconfigured or reassembled after disassembly (to include booms); and

(c) Every 4 years.

> Under conditions (a) and (b), a selective operational performance test (testing only those components that have or may have been affected by the alteration, replacement, repair, reconfiguration, or reassembly) may be performed. When the load performance test of a powerhouse indoor overhead crane would pose unacceptable risk to generators, the District Commander may waive this requirement.

16.C.14 The manufacturer's specifications and limitations applicable to the operation of any crane or derrick shall be followed. At no time shall a crane or derrick be loaded in excess of the manufacturer's rating, except overhead and gantry cranes in accordance with ANSI/ASME B30.2 when overrated loads shall not exceed 125% of rated load for test purposes or planned engineered lifts for overhead and gantry cranes. ***> See 16.C.18.***

a. Where manufacturer's specifications are not available, the limitations assigned to the equipment shall be based on the determinations of a registered engineer competent in this field, and such determinations will be documented and recorded.

b. Attachments used with cranes shall not exceed the capacity, rating, or scope recommended by the manufacturer.

16.C.15 Riding on loads, hooks, hammers, buckets, material hoists, or other hoisting equipment not meant for personnel handling is prohibited.

16.C.16 When practical and when their use does not create a hazard, tag lines shall be used to control loads.

16.C.17 Whenever a slack line condition occurs, the proper seating of the rope in the sheaves and on the drum shall be checked prior to further operations.

16.C.18 Critical lift plans. Before making a critical lift, a qualified person shall prepare a critical lift plan. (The qualified person preparing the plan may be the crane operator, lift supervisor, or the rigger). The crane operator, lift supervisor, and rigger shall participate in the preparation. The plan shall be documented and a copy shall be provided to the GDA. The plan shall be reviewed and signed by all personnel involved with the lift.

a. The plan shall specify the exact size and weight of the load to be lifted and all crane and rigging components that add to the weight. The manufacturer's maximum load limits for the entire range of the lift, as listed in the load charts, shall also be specified.

b. The plan shall specify the lift geometry and procedures, including the crane position, height of the lift, the load radius, and the boom length and angle, for the entire range of the lift.

c. The plan shall designate the crane operator, lift supervisor and rigger and state their qualifications.

d. The plan will include a rigging plan that shows the lift points and describes rigging procedures and hardware requirements.

e. The plan will describe the ground conditions, outrigger or crawler track requirements, and, if necessary, the design of mats, necessary to achieve a level, stable foundation of sufficient bearing capacity for the lift. For floating cranes or derricks, the plan shall describe the operating base (platform) condition and any potential list.

f. The plan will list environmental conditions under which lift operations are to be stopped.

g. The plan will specify coordination and communication requirements for the lift operation.

h. For tandem or tailing crane lifts, the plan will specify the make and model of the cranes, the line, boom, and swing speeds, and requirements for an equalizer beam.

16.C.19 Environmental considerations.

a. Cranes/derricks shall not be operated when wind speeds at the site attain the maximum wind velocity recommendations of the manufacturer. Projects shall have adequate means for monitoring local weather conditions, including a wind-indicating device.

b. Operations undertaken during weather conditions that produce icing of the crane structure or reduced visibility should be performed at reduced functional speeds and with signaling means appropriate to the situation.

c. When conditions are such that lightning could occur, all crane operations shall cease. ***> See 06.J.1.***

d. For night operations, lighting adequate to illuminate the working areas while not interfering with the operator's vision shall be provided. ***> See Section 7.***

16.C.20 Maintenance and repairs.

a. Maintenance and repairs shall be conducted in accordance with the manufacturer's procedures and precautions in accordance with the applicable ANSI/ASME standard.

b. Replacement parts or repairs shall have at least the original design factor; replacement parts for load bearing and other critical parts shall be obtained from the original equipment manufacturer (OEM) or be recertified in accordance with 16.C.14.a.

16.C.21 All cranes and derricks, shall be equipped with an anti-two blocking (A2B) device that will disengage the function that is causing the two-blocking or an A2B damage prevention feature. They shall be tested and certified functional by a competent person prior to operating the crane/derrick. ***> Floating cranes may use an A2B alarm system in lieu of a disengaging device unless they are hoisting personnel. Cranes and derricks used in duty cycle operations are exempt from the requirements for A2B devices. Duty cycle cranes performing occasional lifts shall comply with the procedures in 16.D.05b.(1), (2), and (3).***

16.C.22 All cranes shall be equipped with a fire extinguisher with a basic minimum rating of 10-B:C.

16.D CRAWLER-, TRUCK-, WHEEL-, AND RINGER-MOUNTED CRANES

16.D.01 All lattice boom and hydraulic mobile cranes (except articulating boom cranes) shall be equipped with a boom angle indicator and a load indicating device, or a load moment indicating (LMI) device (rated capacity indicator). Calibration and testing of indicators will be performed in accordance with the manufacturer's recommendations. ***> When cranes are used in duty cycle operations they are exempt from the requirements for load indicating devices and LMI devices.***

16.D.02 All lattice boom and hydraulic mobile cranes shall be equipped with a means for the crane operator to visually determine the levelness of the crane.

16.D.03 On all lattice boom and hydraulic mobile cranes (except articulating boom cranes), drum rotation indicators shall be provided and located to afford sensing by the operator.
> Equipment manufactured before 1990 is exempt from this requirement, but retrofit is highly recommended.

16.D.04 All lattice boom and hydraulic mobile cranes (except articulating boom cranes) shall be equipped with a boom angle or radius indicator located within the operator's view.

16.D.05 When required on a crane/derrick, A2B devices shall be installed at all points of two-blocking.

a. Lattice boom cranes shall be equipped with an A2B device to stop the load hoisting and boom-down functions before the load block or load contacts the boom tip.

b. Lattice boom cranes that are used exclusively for duty cycle operations are exempt from A2B equipment requirements. When a lattice boom crane engaged in duty cycle work is required to make a non-duty cycle lift (for example, to lift a piece of equipment), it will be exempt from the A2B equipment requirements if the following procedures are implemented:

(1) An international orange colored warning device (warning flag, warning tape, or warning ball) is properly secured to the hoist line at a distance of 8 ft to 10 ft (2.4 m to 3 m) above the rigging;

(2) The signal person acts as a spotter to alert the crane operator with a "STOP" signal when the warning device approaches the boom tip and the crane operator ceases hoisting functions when alerted of this;

(3) While the non-duty cycle lift is underway, the signal person shall not stand under the load, shall have no duties other than as a signal person, and shall comply with the signaling requirements of this manual.

c. For lattice boom cranes with manually activated friction brakes, A2B warning devices may be used in lieu of A2B prevention devices.

d. Telescopic boom cranes shall be equipped with an A2B device to stop the load hoisting function before the load block or load contacts the boom tip and to prevent damage to the hoist rope or other machine components when extending the boom.

e. Telescopic boom cranes that are used exclusively for duty cycle operations shall be equipped with a two-blocking damage prevention feature or warning device to prevent damage to the hoist rope or other machine components when extending the boom.

16.D.06 All mobile cranes with cable-supported booms shall be equipped with:

a. Boom stops that, at the angle specified by the crane manufacturer, limit the movement of that portion of the boom below the point at which the boom stop acts on the boom.

(1) The boom stop manufacturer shall certify that the boom stop has been designed, manufactured, and functionally tested such that it will fulfill the requirement of SAE Standard J220. (Pre-1971 cranes will essentially meet the requirements of SAE Standard J220, except for paragraph 4.1.)

(2) A crane boom stop field test will be conducted to verify the proper setup of the boom stops and functioning of the boom hoist disengaging device. This test will be conducted before initiating the performance test required by 16.C.13.

Deficiencies noted shall be corrected before the performance test. ***> See page 11 of Appendix I for test procedures.***

b. All jibs shall have positive stops to prevent their movement of more than 5° above the straight line of the jib and boom on conventional crane booms.

c. A properly functioning boom hoist-disengaging device that shall automatically and completely disengage the boom hoisting power from the boom hoist drum when the boom has reached its highest rated angle. When power is thus disengaged, the boom hoist drum shall automatically be restrained from motion in the lowering direction under any rated condition.

16.D.07 The crane's foundation shall be evaluated for stability. The evaluation shall consider ground conditions, static and dynamic loads, and operating quadrants. Cribbing shall be provided in accordance with the manufacturer's recommendations.

16.D.08 Boom assembly and disassembly.

a. The manufacturer's boom assembly and disassembly procedures shall be followed. The manufacturer's boom assembly and disassembly procedures shall be reviewed by all members of the assembly/disassembly team before the start of assembly and disassembly.

b. When removing pins or bolts from a boom, workers shall stay out from under the boom. Sections shall be blocked or otherwise secured to prevent them from falling, when necessary.

16.D.09 Outriggers.

a. When the load to be handled and/or the operating radius require the use of outriggers, or anytime when outriggers are used, outriggers shall be fully extended to the appropriate

setting indicated by the load chart. The outriggers will be deployed so that the weight of the machine is totally removed from the wheels at every setting (except locomotive cranes).

b. When outrigger floats are used, they shall be securely attached to the outriggers.

c. Blocking under outriggers floats shall meet the following requirements:

(1) Sufficient strength to prevent crushing, bending, or shear failure;

(2) Such thickness, width, and length as to completely support the float, transmit the load to the supporting surface, and prevent shifting, toppling, or excessive settlement under load; and

(3) Use of blocking only under the outer bearing surface of the extended outrigger beam floats.

16.D.10 Unless the manufacturer has specified an on-rubber rating, mobile cranes shall not pick or swing loads over the side of the crane unless the outriggers (if so equipped) are down and fully extended.

16.D.11 Unless recommended against by the manufacturer, crane booms shall be lowered to ground level or secured against displacement by wind loads or other outside forces when not in use. If the manufacturer recommends against this practice, the manufacturer's recommended practice shall be followed.

16.E PORTAL, TOWER, AND PILLAR CRANES

16.E.01 All load bearing foundations, supports, and rail tracks shall be constructed or installed in accordance with the crane manufacturer's recommendations and the applicable ANSI/ASME standard.

16.E.02 Cranes shall be erected in accordance with the crane manufacturer's recommendations and the applicable ANSI/ASME standard.

a. The manufacturer's written erection instructions and a list of the weights of each component to be erected shall be kept at the site.

b. Erection shall be performed under the supervision of a qualified person.

c. An AHA shall be developed and implemented for the erection procedures. The analysis will include a plan that shows:

(1) The location of the crane and adjacent buildings or towers, overhead power and communication lines, underground utilities;

(2) Foundation design and construction requirements; and

(3) When the tower is erected within a structure, the plan shall show clearances between the tower and the structure and bracing and wedging requirements.

d. Wind velocity at the site at the time of erection shall be a consideration and may be a limiting factor that could require suspending the erection operation.

e. Before crane components are erected, they shall be visually inspected for damage. Damaged members shall not be erected.

16.E.03 After erection, and before placing the crane in service, the following shall be tested in accordance with the manufacturer's recommended procedures and ANSI/ASME B30.3 or B30.4, as applicable:

a. Crane supports;

b. Brakes and clutches, limit and overload switches, and locking and safety devices; and

c. Load hoisting and lowering, boom hoisting and lowering, and swing motion mechanisms and procedures.

16.E.04 A boom angle or radius indicator shall be provided within the operator's view.

16.E.05 Luffing jib cranes shall be equipped with jib stops of a shock absorbing type, a jib hoist limit switch, and a jib angle indicator visible to the operator.

16.E.06 Rail clamps, if used, shall have slack between the point of attachment to the rail and the end fastened to the crane. Rail clamps shall not be used as a means of restraining tipping of a crane.

16.E.07 Raising (climbing or telescoping) hammerhead tower cranes.

a. The operator of a hammerhead tower crane shall be present during climbing or telescoping operations.

b. Hammerhead cranes shall not be climbed or telescoped when wind speeds at the top of the crane exceed 20 mph (8.9 m/s) or as recommended by the manufacturer.

c. Climbing operations shall not be commenced until all support provisions required at the new support level are in place and as specified by a qualified person.

16.E.08 Tower cranes shall weathervane when left unattended; luffing jib cranes shall have the boom elevated to 15° when left unattended.

16.F FLOATING CRANES, FLOATING DERRICKS, CRANE BARGES, AND AUXILIARY SHIPBOARD MOUNTED CRANES

16.F.01 Construction. Although all other pertinent parts of this manual apply to this Section, the requirements contained herein are specifically focused on floating cranes/derricks, crane barges, and auxiliary shipboard cranes.

16.F.02 The equipment on floating cranes/derricks, crane barges, and auxiliary shipboard cranes shall be designed and constructed in accordance with the applicable following standards:

a. ANSI/ASME B30.8 .

b. American Bureau of Shipping (ABS), *Guide for Certification of Cranes.*

c. ANSI/American Petroleum Institute (API) Specification 2C.

d. SAE Report J1366.

16.F.03 During lifting operations, the stability of the floating crane/derrick or vessel with an auxiliary shipboard crane shall meet the USCG requirements for “Lifting” set forth in 46 CFR 173.005 through 46 CFR 173.025.

16.F.04 The load rating of a floating crane/derrick shall be the maximum working loads at various radii as determined by the manufacturer or qualified person considering list and trim for each installation. The load rating shall specifically reflect the: design standard; machine trim; machine list; and dynamic/environmental loadings anticipated for the operational envelope of the floating crane/derrick or auxiliary shipboard crane. A Naval Architectural Analysis shall be performed to determine these parameters that shall be used in generating the load rating.

a. The load rating is dependent upon the structural competence of the crane or derrick, rope strength, hoist capacity, structural attachment to the floating platform, and stability and freeboard of the floating platform.

b. When deck loads are to be carried while lifting, the situation shall be analyzed for modified ratings.

c. When mounted on barges or pontoons, the rated loads and radii of land cranes and derricks shall be modified as recommended by the manufacturer or qualified person. The modification shall be evaluated by the qualified person specific to the floating platform mounting the crane.

d. Load charts shall be generated based on the crane load rating for floating service. In addition, the load charts for floating service shall comply with the specific standard it was designed to (See Table 16-1) and clearly explain the floating platform and dynamic/environmental parameters that apply to the load chart. The load chart should, at a minimum, identify the following:

(1) Naval Architect Notes:

(a) Draft limits (with deck cargo considered),

(b) Vessel motion limits,

(c) Vessel and crane list/trim limits, and

(d) Vessel condition (e.g., dry bilges, watertight integrity, etc.).

(i) Crane manufacturer Notes, or reference to them.

(ii) Safe Working Load Chart with:

aa. Mode of operation,

bb. Environmental limits,

cc. Capacity (net or gross),

dd. Load, boom elevation, radius (with list/trim considered), and

ee. Crane configuration, such as:

- Boom length,
- Amount of counterweight,
- Parts of wire, and
- Block size.

e. All crane manufacturer capacity tables should include the boom elevation in degrees from the horizon at each noted capacity. Additionally, the capacity should be clearly defined (i.e., net or gross).

16.F.05 Stability - operating list or trim. Unless the crane or derrick manufacturer recommends a lesser value, operating list or trim shall comply with standards selected from those set forth in Table 16-1. The following shall be the maximum allowable list or trim (if ANSI B30.8 is selected):

a. Cranes, designed for barge or pontoon mounting, rated at 25 tons (22,680 kg) capacity or less shall have a maximum allowable list or trim of 5º.

b. Cranes, designed for barge or pontoon mounting, rated at 25 tons (22,680 kg) capacity or more shall have a maximum allowable list or trim of 7º, although 5º is recommended.

c. Derricks, designed for barge or pontoon mounting, rated at any capacity shall have a maximum allowable list or trim of 10º.

d. Land cranes and derricks mounted on barges or pontoons shall have a maximum allowable list or trim of 5º or the maximum allowed by the crane manufactuer.

16.F.06 Stability - design load conditions. All floating cranes and derricks shall comply with the requirements of 46 CFR 173.005 through 173.025.

a. Cranes or derricks designed for barge or pontoon mounting shall be stable in accordance with standards selected from Table 16-1. The following shall be the minimum allowable freeboard if ANSI B30.8 is selected:

(1) Rated load, 60-mph (26.8-m/s) wind, 2-ft (0.6-m) minimum freeboard;

(2) Rated load plus 25%, 60-mph (26.8-m/s) wind, 1-ft (0.3-m) minimum freeboard;

(3) High boom, no load, 60-mph (26.8-m/s) wind, 2-ft (0.6-m) minimum freeboard;

(4) For backward stability of the boom - high boom, no load, full back list (least stable condition), 90-mph (40.2-m/s) wind.

b. Land cranes and derricks mounted on barges or pontoons:

(1) Barge- or pontoon-mounted land cranes require modified ratings due to increased loading from list, trim, wave action, and wind. This rating will be different for each size of pontoon or barge used. Therefore, the load rating of barge- or pontoon-mounted land cranes and derricks shall not exceed that recommended by the manufacturer for the particular barge or pontoon under the expected environmental conditions.

(2) All deck surfaces of the pontoon or barge shall be above the water.

(3) The entire bottom area of the barge or pontoon shall be submerged.

(4) Provide tie-downs for derricks to transmit the loading to the barge or pontoon.

(5) Cranes shall be blocked and secured to prevent shifting.

16.F.07 Environmental considerations.

a. The project supervisor shall obtain daily weather forecasts before beginning work and as frequently thereafter as required to monitor any potential weather problems. ***> See Section 19.A.***

b. When a local weather storm warning exists, consideration shall be given to the recommendations of the manufacturer for securing the crane.

c. Work shall be halted when environmental conditions exceed those delineated on the load chart.

16.F.08 Truck- and crawler-cranes shall be attached to the barge or pontoon by means of a tie-down system with some slack. Movement during lift operations is not permitted.

16.F.09 When loads approach the maximum rating of the crane or derrick, the person responsible for the job shall ascertain that the weight of the load has been determined within +/- 10% before it is lifted.

16.F.10 Means shall be provided for the operator to visually determine the list and trim of the barge or pontoon, as well as machinery list and trim in rotating crane cabs.

16.F.11 Principal walking surfaces shall be of a skid-resistant type.

16.F.12 Boom stops shall be provided to resist the boom fall backwards.

16.F.13 A boom angle indicator readable from the operator's station shall be provided on all floating cranes.

16.F.14 All floating cranes/derricks and shipboard auxiliary cranes shall be fitted with load limiting devices (LLDs) or load indicating devices (LID) or LMI that meet all the requirements of 29 CFR 1918.66(f). This requirement shall become effective 1 year from the effective date of this manual.

a. Duty cycle operations are exempt from these requirements.

b. Duty cycle cranes performing occasional non-critical lifts shall comply with the following:

(1) Total weight of load and rigging is known or calculated;

(2) Load chart is reviewed for weight and planned radius;

(3) Informal pre-lift meeting is held between all personnel directly involved (operator, rigger, etc.) to review the conditions present for that lift (environmental, configuration, etc.)

16.F.15 All floating cranes/derricks and crane barges shall be equipped with wind speed and direction indicating devices within clear view of the operator's station.

16.F.16 Operational guidance.

a. Operators shall monitor the wire lead from the boom tip carefully to ensure that limits on off-lead and side-lead identified in the load chart are not exceeded.

b. Operators shall monitor environmental criteria for compliance with the criteria set forth in the load chart.

c. Operators should be aware that safety devices such as LLD(s) and LMI(s) do not offer protection against loads

generated by relative motions between a floating crane and a fixed object to be lifted.

d. Whenever practical, crane use during buoy tending shall be limited to lifting the freely suspended buoy clear of the water onto the vessel.

e. Bilges shall be kept as dry as possible to eliminate the adverse effect of free surface (sloshing liquid).

16.F.17 All lifts must be planned to avoid procedures that could result in configurations where the operator cannot maintain safe control of the lift. (A plan, in this case, might be a quick discussion with the deck crew, and a verification of the proposed operation.) Lifts shall reflect floating operational parameters such as: anticipated values for wire leads unknown load for extractions, and upper limits on crane force.

16.F.18. Anchor handling barge.

a. Vessels meeting the definition of anchor handling barge (see Appendix Q), shall be required to comply with only Sections 16.A01 through 16.A.04; 16.C.02, 16.C.08, 16.C.12, 16.C.13, 16.C.14; 16.F.04, 16.F.16 (ANSI/ASME does not apply to anchor barges), and the following:

(1) All deck surfaces of the pontoon or barge shall be above the water.

(2) Means for limiting the applied load, such as mechanical means or marking the draft of the barge corresponding to the rated load, shall be provided. Calculations shall be available and the barge shall be tested to verify rated load.

(3) A ratchet and pawl shall be provided for releasing the load from the hoisting machinery brake.

(4) An operating manual/procedure shall be available for use by the operator. The operator shall be trained in the anchor handling barge systems operation.

b. If additional external load is superimposed above that which can be hoisted with the onboard hoisting machinery, then a chain stopper shall be used to remove the external load from the A-frame and hoist machinery.

c. An anchor handling barge may be used for anchor handling low lifting of loads such as anchor buoys/weights, dredge pipe, submerged pipeline, pontoons, and other loads provided they do not exceed the load rating of the anchor barge. If used for any other lifting application, the work platform will be considered a floating derrick and all other requirements of Section 16 apply.

16.G OVERHEAD AND GANTRY CRANES

16.G.01 All load bearing foundations, anchorages, runways, and rail tracks shall be constructed or installed in accordance with the crane manufacturer's recommendations and ANSI/ASME B30.2 or B30.17, as applicable.

16.G.02 The rated load of the crane shall be plainly marked on each side of the crane.

a. If the crane has more than one hoisting unit, each hoist shall have its rated load marked on it or its load block.

b. Markings on the bridge, trolley, and load block shall be legible from the ground or floor.

16.G.03 Clearance shall be maintained between the crane, any structure or object, and any parallel running cranes and cranes operating at different elevations.

16.G.04 Contacts with runway stops or other cranes shall be made with extreme caution. The operator shall do so with particular care for the safety of persons on or below the crane, and only after

making certain that any persons on the other cranes are aware of what is being done.

16.G.05 Operators of outdoor cranes shall secure them when leaving.

16.G.06 When the wind-indicating alarm of a cab-operated outdoor crane sounds, crane operations shall be discontinued and the crane shall be prepared and stored for excessive wind conditions.

16.H MONORAILS AND UNDERHUNG CRANES

16.H.01 Crane runways, monorail tracks, track supports, and track control devices shall be constructed or installed in accordance with the crane manufacturer's recommendations and ANSI/ASME B30.11.

16.H.02 The rated load of the crane shall be plainly marked on each side of the crane.

a. If the crane has more than one hoisting unit, each hoist shall have its rated load marked on it or its load block.

b. Markings on the bridge, trolley, and load block shall be legible from the ground or floor.

16.I DERRICKS

16.I.01 For permanent fixed locations, the owner shall provide the following load anchoring data (for nonpermanent installations, this data shall be determined by a qualified person):

a. Guy derricks.

(1) Maximum horizontal and vertical forces when handling rated loads with the particular guy slope and spacing stipulated for the application, and

(2) Maximum horizontal and vertical forces at the guys when handling rated loads with the particular guy slope and spacing stipulated for the application.

b. Stiffleg derricks.

(1) Maximum horizontal and vertical forces at the mast base when handling rated loads with the particular stiffleg slope and spacing stipulated for the application, and

(2) Maximum horizontal and vertical forces at the stifflegs when handling rated loads with the particular stiffleg arrangement stipulated for the application.

16.I.02 Derrick booms, load hoists, and swinger mechanisms shall be suitable for the derrick work intended and shall be anchored to prevent displacement from imposed loads.

16.I.03 When rotating a derrick, sudden starts and stops shall be avoided and rotational speed shall be such that the load does not swing out beyond the radius at which it can be controlled. A tagline shall be used.

16.I.04 Boom and hoisting rope systems shall not be twisted.

16.I.05 Ropes shall not be handled on a winch head without the knowledge of the operator. When a winch head is being used, the operator shall be within reach of the power unit controls.

16.I.06 When securing the boom, dogs or other positive holding mechanisms on the hoist shall be engaged.

16.I.07 When not in use the derrick boom shall be either:

a. Laid down;

b. Secured to a stationary member as nearly under the head as possible by attachment of a sling to the load block;

c. Lifted to a vertical position and secured to the mast (for guy derricks); or

d. Secured against a stiffleg (for stiffleg derricks).

16.J HELICOPTER CRANES

16.J.01 Helicopter cranes shall comply with regulations of the Federal Aviation Administration (FAA).

16.J.02 Before each day's operation, a briefing shall be conducted to set forth the plan of operation for the pilot and ground personnel.

16.J.03 Loads shall be properly slung.

a. Tag lines shall be of a length that will not permit their being drawn up into rotors.

b. Pressed sleeve, swedged eyes, or equivalent means shall be used for all freely suspended loads to prevent hand splices from spinning open or cable clamps from loosening.

16.J.04 All electrically operated cargo hooks shall have the electrical activating device so designed and installed as to prevent inadvertent operation.

a. In addition, these cargo hooks shall be equipped with an emergency mechanical control for releasing the load.

b. The hooks shall be tested prior to each day's operation to determine that the release functions properly, both electrically and mechanically.

16.J.05 PPE equipment for employees receiving the load shall consist of eye protection and hard hats secured by chinstraps.

16.J.06 Loose-fitting clothing likely to flap in the downwash, and thus be snagged on hoist line, shall not be worn.

16.J.07 Every practical precaution shall be taken to provide for the protection of the employees from flying objects in the rotor downwash. All loose gear within 100 ft (30.4 m) of the place of lifting or depositing the load, and all other areas susceptible to rotor downwash, shall be secured or removed.

16.J.08 The helicopter pilot shall be responsible for the size, weight, and manner in which loads are connected to the helicopter. If, for any reason, the helicopter pilot believes the lift cannot be made safely, the lift shall not be made.

16.J.09 When employees are required to work under hovering craft, safe access shall be provided for employees to reach the hoist line hook and engage or disengage cargo slings. Employees shall not work under hovering craft except to hook, unhook, or position loads.

16.J.10 Static charge on the suspended load shall be dissipated with a grounding device before ground personnel touch the suspended load, or protective rubber gloves shall be worn by all ground personnel touching the suspended load.

16.J.11 The weight of an external load shall not exceed the rated capacity.

16.J.12 Hoist wires or other gear, except for pulling lines or conductors that are allowed to "pay out" from a container or roll off a reel, shall not be attached to any fixed ground structure or be allowed to foul on any fixed structures.

16.J.13 When visibility is reduced by dust or other conditions, ground personnel shall exercise special caution to keep clear of main and stabilizing rotors. Precautions shall also be taken to eliminate reduced visibility.

16.J.14 No unauthorized person shall be allowed to approach within 50 ft (15.2 m) of the helicopter when the rotor blades are turning.

16.J.15 Whenever approaching or leaving a helicopter with blades rotating, all employees shall remain in full view of the pilot and keep in a crouched position. Employees shall avoid the area from the cockpit or cabin rearward unless authorized by the helicopter pilot to work there.

16.J.16 There shall be constant reliable communication between the pilot and a designated employee of the ground crew who acts as a signal person during loading and unloading. This signal person shall be distinctly recognizable from other round personnel. ***> See Figure 8-11.***

16.J.17 Good housekeeping shall be maintained in all helicopter loading and unloading areas.

16.K MATERIAL HOISTS

16.K.01 Material hoists shall be designed and constructed or installed in accordance with the requirements of ANSI A10.5.

16.K.02 Material hoist towers, masts, guys or braces, counterweights, drive machinery supports, sheave supports, platforms, supporting structures, and accessories shall be designed by a licensed engineer.

16.K.03 Hoist towers shall be erected and dismantled only under the direct supervision of a qualified individual.

16.K.04 A copy of the hoist operating manual shall be available at all times it is operated.

16.K.05 Material hoists and hoist tower systems shall be inspected in accordance with the manufacturer's recommendations.

a. Prior to initial use and each time after the tower is extended, all parts of the tower or mast, cage, bucket, boom, platform, hoisting machine, guys, and other equipment shall be inspected by a qualified person to ensure compliance with the manufacturer's inspection guidelines and ANSI A10.5.

b. Prior to initial use on a USACE project, and monthly thereafter, a periodic inspection shall be conducted by a qualified person. Periodic inspections shall cover those items specified by the manufacturer. At the minimum, periodic inspections shall cover all sheaves, racks and pinions, guy ties, bolt connections, miscellaneous clamps, braces, and similar parts.

c. A GDA shall be notified at least 24 hours prior to any of the above inspections and may wish to accompany the contractor's inspector.

d. Pre-operational inspections (start-up procedures) shall be conducted by the operator prior to every operation (shift) of the hoist.

16.K.06 Before a hoist is placed in service and every 4 months thereafter, a car-arresting-device test shall be performed.

a. For rope-supported cars, the test shall be conducted in the following manner:

(1) Pull a loop in the lifting rope and attach the test rope to each side of the loop above the bucket or platform,

(2) Raise the platform or bucket to allow the load to be supported by the test rope, and

(3) Cut the test rope to allow the load to fall and activate the car-arresting device.

b. For car suspension other than rope supported, the test shall be conducted by creating an over speed condition of the car.

c. Structural components shall be inspected for damage after the test and before the hoist is placed in operation again.

16.K.07 Maintenance and repairs.

a. Replacement parts for load bearing or critical components shall be either obtained from or certified by the equipment manufacturer.

b. Maintenance and repairs shall be conducted in accordance with the manufacturer's precautions and procedures.

16.K.08 Landings and runways.

a. Landing platforms and runways that connect the hoist way or tower to a structure shall be designed and constructed to sustain the maximum intended load without failure.

b. Floors or platforms that may become slippery shall have slip-resistant surfaces.

c. When workers may be exposed to falling objects, overhead protection, composed of 2-in (5-cm) planking or the equivalent, shall be provided.

d. A barricade shall be provided at the open ends of each landing. The barricade shall extend a minimum distance of 6 ft (1.8 m) laterally along the outer edge of the landing from each side of the hoist way, shall extend from the floor a distance of at least 3 ft (0.9 m), and shall be of #19 US gauge wire or the equivalent, with openings not exceeding 0.5 in (1.2 cm).

e. All hoist way entrances shall be protected by substantial gates or bars that shall guard the full width of the landing entrance. Gates shall be not less than 66 in (167.6 cm) in height, with a maximum under clearance of 2 in (5 cm), and shall be located not more than 4 in (10.1 cm) from the hoist way line. Gates of grille, lattice, or other open work shall have openings of not more than 2 in (5 cm).

f. Material shall not be stored on landing platforms or runways.

16.K.09 Whenever a slack line condition occurs, the proper seating of the rope in the sheaves and on the drum shall be checked prior to further operations.

16.K.10 Hoisting ropes shall be installed in accordance with the equipment manufacturer's recommendations.

a. There shall be at least three full wraps of cable on the drums of hoisting equipment at all times.

b. The drum end of the rope shall be anchored to the drum by an arrangement specified by the crane or rope manufacturer.

16.K.11 Riding on material hoists or other hoisting equipment not meant for personnel handling is prohibited.

16.K.12 While hoisting equipment is in operation, the operator shall not perform any other work and shall not leave his/her position at the controls until the load has been safely landed or returned to ground level.

16.K.13 Not more than one cage or bucket shall be operated at the same time by any one hoisting machine or operator.

16.K.14 Operating rules shall be established and posted at the operator's station of the hoist. Such rules shall include signal system and allowable line speed for various loads. Rules and notices shall be posted on the car frame or crosshead in a conspicuous location, including the statement **"NO RIDERS ALLOWED."**

16.K.15 Air-powered hoists shall be connected to an air supply of sufficient capacity and pressure to safely operate the hoist. Pneumatic hoses shall be secured by some positive means to prevent accidental disconnection.

16.L PILE DRIVERS

16.L.01 Guys, outriggers, thrust outs, counter-balances, or rail clamps shall be provided to maintain stability of pile-driver rigs.

16.L.02 Pile-driver leads.

a. Swinging (hanging) leads.

(1) Swinging (hanging) leads shall have fixed ladders.

(2) Employees shall be prohibited from remaining on leads or ladders while pile is being driven.

b. Fixed leads.

(1) Fixed pile-driver leads shall be provided with decked landings having guard rails, intermediate rails, and toe boards. Fixed ladders or stairs shall be provided for access to landings and head blocks.

(2) Fixed leads shall be provided with rings or attachment points so that workers exposed to falls of 6 ft (1.8 m) or greater may attach their safety belt lanyard to the leads.

c. Landings or leads shall not be used for storage of any kind.

d. Pile-driver leads shall have stop blocks to prevent the hammer from being raised against the head block.

e. A blocking device, capable of supporting the weight of the hammer, shall be provided for placement in the leads under the hammer at all times while employees are working under the hammer.

f. Leads shall be free of projections or snags to minimize line damage and personnel safety hazards.

16.L.03 Dogs, on pile-driver hoist drums, that automatically disengage when the load is relieved or the drum is rotated shall be prohibited.

16.L.04 Guards shall be provided across the top of the head block to prevent cable from jumping out of the sheaves.

16.L.05 All hose connections to pile-driver hammers, pile ejectors, or jet pipes shall be securely attached with an adequate length of at least 1/4-in (0.6-cm) alloy steel chain, having 3,250 lb (1,500 kg) working load limit, or equal strength cable, to prevent whipping if the joint is broken.

16.L.06 Steam-line controls shall consist of two shutoff valves, one of which shall be a quick-acting lever type within easy reach of the hammer operator.

16.L.07 Floating pile drivers.

a. The width of hulls of floating pile drivers shall not be less than 45% of the height of the lead above the water.

b. The operating deck of floating pile drivers shall be so guarded as to prevent piles that are being hoisted into driving position from swinging in over the deck.

16.L.08 Hoisting and moving pile.

a. All employees shall be kept clear when piling is being hoisted into the leads.

b. Hoisting of steel piling shall be done by use of a closed shackle or other positive attachment that will prevent accidental disengagement.

c. Taglines shall be used for controlling unguided piles and free hanging (flying) hammers.

d. Hammers shall be lowered to the bottom of the leads while the pile driver is being moved.

16.L.09 When driving jacked piles, all access pits shall be provided with ladders and bulk headed curbs to prevent material from falling into the pit.

16.L.10 When it is necessary to cut off the tops of driven piles, pile-driving operations shall be suspended except where the cutting operations are located at least twice the length of the longest pile from the driver.

16.L.11 Pile extraction.

a. If piling cannot be pulled without exceeding the load rating of equipment, a pile extractor shall be used.

b. When pulling piling, cranes shall be equipped with LID devices and the booms shall not be raised more than 60° above the horizontal. (This requirement does not apply to vibrating-type pulling devices.)

c. Piling shall not be pulled by tipping the crane, releasing the load brake momentarily, and catching the load before the crane has settled.

16.M DRILLING EQUIPMENT

16.M.01 Applicability. The requirements of this Section (16.M) are applicable to rock, soil, and concrete drilling operations.

16.M.02 Drilling equipment shall be operated, inspected, and maintained as specified in the manufacturer's operating manual. A copy of the manual will be available at the job site.

16.M.03 Prior to bringing earth drilling equipment on the job site, a survey shall be conducted to identify overhead electrical hazards

and potential ground hazards, such as contact with unexploded ordnance, hazardous agents in the soil, or underground utilities.

a. The location of any overhead or ground hazards shall be identified on a site layout plan.

b. The findings of this survey and the controls for all potential hazards shall become a part of the AHA.

16.M.04 The AHA for an earth drilling activity will not be accepted unless:

a. It contains a copy of the MSDS for the drilling fluids, if required;

b. It meets the requirements of 01.A.13; and

c. It indicates that the site layout plan specified in 16.M.03 will become a part of the analysis, and will be covered at the preparatory inspection (pre-activity safety briefing), when the plan has been completed.

16.M.05 Training.

a. All members of drilling crews shall be trained in:

(1) The operation, inspection, and maintenance of the equipment;

(2) The safety features and procedures to be used during operation, inspection, and maintenance of the equipment; and

(3) Overhead electrical line and underground hazards.

b. This training will be based on the equipment operating manual and the AHA.

16.M.06 Drilling equipment shall be equipped with two easily accessible emergency shutdown devices, one for the operator and one for the helper.

16.M.07 Clearance from electrical sources shall be as specified in 11.E.05.

a. Drilling equipment shall be posted with signs warning the operator of electrical hazards.

b. The equipment operator shall ascertain proper clearance before moving equipment. Clearance shall be monitored by a spotter or by an electrical proximity warning device.

16.M.08 Moving equipment.

a. Before drilling equipment is moved, the travel route shall be surveyed for overhead and terrain hazards, particularly overhead electrical hazards.

b. Earth drilling equipment shall not be transported with the mast up. The exception is movement of the equipment required in drilling a series of holes, such as in blasting, if the following conditions are satisfied:

(1) Movement is over level, smooth terrain;

(2) The path of travel has been inspected for stability and the absence of holes, other ground hazards, and electrical hazards; and

(3) The travel distance is limited to short, safe distances.

16.M.09 Equipment set-up.

a. Equipment shall be set-up on stable ground and maintained level. Cribbing shall be used when necessary.

b. Outriggers shall be extended per the manufacturer's specifications.

c. When drilling equipment is operated in areas with the potential for classification as a confined space, the requirements of 6.I shall be followed.

16.M.10 Equipment operation.

a. Weather conditions shall be monitored. Operations shall cease during electrical storms or when electrical storms are imminent. ***> See 06.J.01.***

b. Drill crewmembers shall not wear loose clothing, jewelry, or equipment that might become caught in moving machinery.

c. Auger guides shall be used on hard surfaces.

d. The operator shall verbally alert employees and visually ensure employees are clear from dangerous parts of equipment before starting or engaging equipment.

e. The discharge of drilling fluids shall be channeled away from the work area to prevent the ponding of water.

f. Hoists shall be used only for their designed intent and shall not be loaded beyond their rated capacity. Steps shall be taken to prevent two-blocking of hoists.

g. The equipment manufacturer's procedures shall be followed if rope becomes caught in, or objects get pulled into, a cathead.

h. Drill rods shall neither be ran nor be rotated through rod slipping devices. No more than 1 ft (0.3 m) of drill rod column shall be hoisted above the top of the drill mast. Drill rod tool joints shall not be made up, tightened, or loosened while the rod column is supported by a rod-slipping device.

i. Dust shall be controlled. When there is potential for silica exposure, the requirements contained in Appendix C shall be implemented.

j. Augers shall be cleaned only when the rotating mechanism is in neutral and the auger stopped. Long-handled shovels shall be used to move cutting from the auger.

k. Open boreholes shall be capped and flagged. Open excavations shall be barricaded.

l. Means (e.g., guard around the auger; barricade around the perimeter of the auger; electronic brake activated by a presence-sensing device) shall be provided to guard against employee contact with the auger.

m. The use of side-feed swivel collars on drill rods are restricted to those collars that are retained by either a manufacturer-designed stabilizer or a stabilizer approved by a professional engineer.

SECTION 17

CONVEYORS

17.A GENERAL

17.A.01 Conveyor systems shall be constructed and installed in accordance with the manufacturer's recommendations.

17.A.02 Inspection, maintenance, and repair.

a. Inspection, maintenance, and repairs shall be performed in accordance with the manufacturer's recommendations by qualified personnel.

b. No maintenance shall be performed when a conveyor is in operation except for the following:

(1) If lubrication is to be done while the conveyor is in motion, lubrication points shall be easily accessible and safe for lubrication. Only trained personnel who are aware of the hazards of the conveyor in motion shall be allowed to lubricate a conveyor that is operating; and

(2) When adjustments or maintenance is required while the conveyor is in operation, only trained personnel who are aware of the hazards shall be permitted to make the adjustment or maintenance.

c. Lockout and tagout procedures shall be used. ***> See Section 12.***

d. Safe access shall be provided to permit inspection, lubrication, repair, and maintenance activities.

17.A.03 Safety devices.

a. On all conveyors where reversing or runaway are potential hazards or the effects of gravity create a potential for hazardous uncontrolled lowering, anti-runaway devices, brakes, backstops, or other safeguards shall be installed to protect persons from injury and property from damage.

b. Conveyor systems shall be equipped with an audible warning signal to be sounded immediately before starting of the conveyor. ***> On overland conveyors systems, the devices shall be required only at the transfer, loading, and discharge points and those points where personnel are normally stationed.***

c. All conveyors shall be equipped with emergency stopping devices along their full length.

d. Safety devices shall be arranged to operate in such a manner that if power failure or a failure of the device occurs a hazardous condition would not result.

17.A.04 All exposed moving machinery parts that present a hazard shall be mechanically or electrically guarded or guarded by location.

a. Nip and shear points shall be guarded.

b. Take-up mechanisms may be guarded as an entity by placing standard railings or fencing, and warning signs, around the area in lieu of guarding each nip and shear point.

c. In the case of a trolley conveyor when mechanical or electrical guarding would render the conveyor unusable, prominent and legible warnings shall be posted in the area or on the equipment and, where feasible, areas barricaded or lines marked on the ground to indicate the hazard area.

d. Guards shall be provided at points where personnel could contact cables, chains, belts, and runaways of exposed bucket conveyors.

e. Unless guarded by location, those sections of chain conveyors that cannot be enclosed without impairing the function shall be provided with warning signs or personnel barriers.

f. Trolley conveyors shall be provided with spill guards, pan guards, or the equivalent if there is a potential for material to fall off the conveyor and endanger personnel or equipment.

g. At transfer, loading, and discharge points, unconfined and uncontrolled free fall of material that may result from flooding, ricocheting, overloading, trajectory, leakage, or a combination thereof, shall be prevented if the material would create a hazard to personnel. ***> In the absence of a guard specifically erected to protect personnel, warnings shall be provided to restrict unauthorized personnel from entering such hazardous areas***.

h. At all points along the conveyor, except at points where loads are removed from or placed on a conveyor or where a conveyor discharges to or receives material from another conveyor, provisions shall be made to eliminate the possibility of loads or material being dislodged from the conveyor.

17.A.05 Access.

a. Crossovers or underpasses with safeguards shall be provided for passage over or under all conveyors: crossing over or under conveyors is prohibited except where safe passageways are provided.

b. Whenever conveyors pass adjacent to, or over, work areas, roadways, highways, railroads, or other public passageways, protective guards shall be installed. The guards shall be

designed to catch and hold any load or material that may fall off or become dislodged from the system.

c. Where conveyors are operated in tunnels, pits, and similar enclosures, ample room shall be provided to allow safe accessway and operating space for all personnel.

17.A.06 Emergency stop devices.

a. Unless the design, construction, and operation of a conveyor is clearly non-hazardous to personnel, emergency stop buttons, pull cords, limit switches, or similar emergency devices shall be provided at the following locations for remotely or automatically controlled conveyors or conveyors where operator stations are not manned or are beyond voice and visual contact from drive areas:

(1) Loading arms,

(2) Transfer points, and

(3) Other potentially hazardous locations on the conveyor path not guarded by location or guards.

b. All emergency stop devices shall be easily identifiable and readily accessible.

c. Emergency stop devices shall act directly on the control of the conveyor concerned and shall not depend on the stopping of any other equipment.

d. Emergency stop devices shall be installed so that they cannot be overridden from other locations.

17.A.07 Gates and switches.

a. Power-positioned gate and switch sections shall be provided with devices that will prevent these sections from falling in case of power failure.

b. Means shall be provided on all gates and switch sections to prevent conveyed material from discharging into the open area created by lifting of the gate or switch.

17.A.08 Counterweights.

a. When counterweights are supported by belts, cables, chains, or similar means, the weights shall be confined in an enclosure to prevent the presence of personnel beneath the counter-weight, or the arrangement shall provide a means to restrain the falling weight in case of failure of the normal counterweight support.

b. When counterweights are attached to lever arms they shall be securely fastened.

17.A.09 When two or more conveying systems are interfaced, special attention shall be given to the interfaced area to ensure the presence of adequate guarding and safety devices.

17.A.10 Conveyor controls shall be arranged so that in case of an emergency stop, manual reset or restart is required at the location where the emergency stop was initiated to resume conveyor operations.

17.A.11 Control stations shall be arranged and located so that the operation of the equipment is visible from them.

17.A.12 Controls shall be clearly marked or labeled to indicate the function controlled.

17.A.13 Hoppers and chutes.

a. All openings to the hopper and chutes shall be guarded to prevent persons from accidentally stepping into them. If guards are not practical, warning signs shall be posted.

b. Dump hoppers having the hopper flush with the floor and which by their use cannot be guarded shall be equipped with grating having a maximum opening of 2 in (5 cm) and heavy enough to withstand any load which may be imposed on it. If the openings in the grating are larger or if no grating is provided, temporary railing shall be placed around ground level hoppers when dumping operation are not in progress. During dumping operation, warning signs shall be placed in conspicuous locations warning personnel of an open pit.

17.A.14 Mobile conveyors.

a. Mobile conveyors shall be provided with brakes or other position locking devices for each degree of motion where movement would present a hazard.

b. Mobile conveyors shall be designed to be stationary against runaway and stable against overturning under normal conditions of operation.

c. When an operator is required on a mobile conveyor, a platform or cab shall be provided for his/her protection.

17.A.15 Portable conveyors.

a. The raising and lowering mechanism for the boom of a portable conveyor shall be provided with a safety device that will hold the boom at any rated angle of inclination.

b. Portable conveyors shall be stable so that the conveyor will not topple when used with the manufacturer's rating and in a manner in which it was intended or when being moved.

17.A.16 Screw Conveyors.

a. Screw conveyors shall not be operated unless the conveyor housing completely encloses the conveyor moving elements and power transmission guards are in place, except that if the conveyor must have an open housing as a condition of use, the entire conveyor shall then be guarded by railing, fence, or by location.

b. Feed openings for shovel, front-end loader, or other manual or mechanical equipment shall be constructed in such a way that the conveyor screw is covered by grating. If the nature of the material is such that grating cannot be used, then the exposed section of the conveyor shall be guarded by a railing and warning signs shall be posted.

17.B OPERATION

17.B.01 Conveyor equipment shall be used to convey only those materials for which it was designed and within the rated capacities and speeds.

17.B.02 Flight and apron conveyors shall be "jogged" or hand run through at least one complete revolution at installation to check design clearances prior to running under automatic power.

17.B.03 A conveyor that could cause injury when started shall not be started until all personnel in the area are alerted by a signal or by a designated person that the conveyor is about to start.

17.A.04 When a conveyor that could cause injury when started is automatically controlled or must be controlled from a remote location, an audible warning device shall be provided. The device shall be clearly audible at all points along the conveyor where personnel may be present.

a. The warning device shall be activated by the controller device that starts the conveyor and shall continue for a period of time before the conveyor starts. A flashing light or similar visual

warning shall be used with the audible device when conditions limit the effectiveness of the audible device.

b. If a conveyor system is not exposed to the public, and if function of the system would be seriously hindered or adversely affected by the required time delay or where the intent of the warning may be misinterpreted, clear, concise, and legible warning signs shall be provided and indicate that the system may be started at any time, that danger exists, and that personnel must keep clear. These warnings signs shall be provided along the conveyor at areas that are not guarded or protected by their location.

17.B.05 Before restarting a conveyor that has been stopped because of an emergency, an inspection of the conveyor shall be conducted and the cause of the emergency stop determined.

17.B.06 Only trained personnel shall be permitted to operate a conveyor. Training shall include instruction in operation under normal conditions and in emergencies.

17.B.07 The area around loading and unloading points shall be kept clear of obstructions that could create a hazard.

17.B.08 Riding on conveyors is prohibited.

17.B.09 Personnel working with or near a conveyor shall be:

a. Instructed as to the location and operation of pertinent stopping devices, and

b. Alerted of the potential hazard of entanglement in conveyors caused by such items as loose clothing and jewelry and long hair.

17.B.10 Only trained personnel shall track a conveyor belt that must be done while the conveyor is operating.

17.B.11 Applying a belt dressing or other foreign material to a rotating drive pulley or conveyor belt shall be avoided.

17.B.12 Flight and apron conveyors handling sticky materials that tend to build up shall be cleaned as often as required for safe operation.

SECTION 18

MOTOR VEHICLES AND AIRCRAFT

18.A GENERAL

18.A.01 Every person operating a motor vehicle shall possess, at all times while operating such vehicle, a license/permit valid for the equipment being operated. The operator must present the license/permit to the GDA upon request. Failure to do so may result in the immediate shutdown of the vehicle involved and removal of the operator from the project.

18.A.02 Inspection, tests, maintenance, and repairs.

a. Inspections, tests, maintenance, and repairs shall be conducted by a qualified person and in accordance with the manufacturer's recommendations.

b. Before initial use, vehicles not otherwise inspected by State or local authorities, shall be inspected by a qualified mechanic and found in safe operating condition. The inspection shall be documented in writing and available for inspection on the work site. ***>This is a one-time inspection.***

c. When dump trucks are brought onto a USACE job site, they shall be inspected and found in compliance with the requirements of this Section before they are placed in service. This inspection shall be documented on a checklist.

d. All vehicles shall be inspected on a scheduled maintenance program.

e. Prior to each use, but not more often than daily, vehicles shall be checked by the operator to assure that the following parts, equipment, and accessories are in safe operating condition and free of apparent damage that could cause failure while in use:

(1) Service brakes, including trailer brake connections;

(2) Parking system (hand brake);

(3) Emergency stopping system (brakes);

(4) Tires;

(5) Horns;

(6) Steering mechanism;

(7) Coupling devices;

(8) Seat belts;

(9) Operating controls;

(10) Safety devices (e.g., backup alarms and lights, fire extinguishers, first-aid kits, etc.); and

(11) Accessories including lights, reflectors, windshield wipers, and defrosters where such equipment is necessary.

f. Inspection, test, repair, and maintenance records shall be maintained at the site and shall be available on request to the GDA.

18.A.03 Vehicles not meeting safe operating conditions shall be immediately removed from service, its use prohibited until unsafe conditions have been corrected, and re-inspected before being placed in service again.

18.A.04 All vehicles or combination of vehicles operated between sunset and sunrise shall have the following lights:

a. Two headlights, one on each side of the front;

b. At least one red taillight and one red or amber stoplight on each side of the rear;

c. Directional signal lights (both front and back); and

d. Three emergency flares, reflective markers, or equivalent portable warning device.

18.A.05 Brake systems.

a. All vehicles, except trailers having a gross weight of 5,000 lb (2267.9 kg) or less, shall be equipped with service brakes and manually-operated parking brakes.

b. Service and parking brakes shall be adequate to control the movement of, to stop, and to hold the vehicle under all conditions of service.

c. Service brakes on trailers and semi-trailers shall be controlled from the driver's seat of the prime mover.

d. Braking systems on every combination of vehicles shall be so designed as to be in approximate synchronization on all wheels and develop the required braking effort on the rear-most wheels first. The design shall also provide for application of the brakes by the driver of the prime mover from the cab. Exceptions to this are vehicles in tow by an approved tow bar hitch.

18.A.06 Every motor vehicle shall have:

a. An operable speedometer;

b. An operable fuel gage;

c. An operable audible warning device (horn) in operating condition;

d. A windshield equipped with an adequate windshield wiper;

e. An operable defrosting and defogging device;

f. An adequate rear view mirror or mirrors;

g. Cabs, cab shields, and other protection to protect the driver from the elements and falling or shifting materials;

h. Non-slip surfaces on steps; and

i. A power-operated starting device.

18.A.07 Glass in windshields, windows, and doors shall be safety glass. Any cracked or broken glass shall be replaced.

18.A.08 Trailers.

a. All towing devices used on any combinations of vehicles shall be structurally adequate for the weight drawn and shall be properly mounted.

b. A locking device or double safety system shall be provided on every fifth wheel mechanism and tow bar arrangement to prevent the accidental separation of towed and towing vehicles.

c. Every trailer shall be coupled with safety chains or cables to the towing vehicle. Such chain or cable shall prevent the separation of the vehicles in case of tow bar failure.

d. Trailers equipped with power brakes shall be equipped with a breakaway device that effectively locks-up the brakes in the event the trailer separates from the towing vehicle.

18.A.09 Industrial and commercial vehicles shall meet the guarding and safety requirements of 16.B.

18.A.10 Dump trucks.

a. All dump trucks shall be equipped with a holding device to prevent accidental lowering of the body while maintenance or inspection work is being done.

b. All hoist levers shall be secured to prevent accidental starting or tripping of the mechanism.

c. All off-highway end-dump trucks shall be equipped with a means (plainly visible from the operator's position while looking ahead) to determine whether the dump box is lowered.

d. Trip handles for tailgates on all dump trucks shall be arranged to keep the operator in the clear.

18.A.11 All buses, trucks, and combinations of vehicles with a carrying capacity of 1.5 tons (1,360.8 kg) or over, when operated on public highways, shall be equipped with emergency equipment required by State laws but not less than:

a. One red flag not less than 12 square inches (in^2) (77.4 square centimeter (cm^2)) with standard and three reflective markers that shall be available for immediate use in case of emergency stops.

b. Two wheel chocks for each vehicle or each unit of a combination of vehicles.

c. At least one 2A:10B:C fire extinguisher (at least two properly rated fire extinguishers are required for flammable cargoes).

18.A.12 Vehicle exhaust shall be controlled so that it will not present a hazard to the operator, attendants, or other personnel.

18.A.13 A safety tire rack, cage, or equivalent protection shall be provided and used when inflating, mounting, or dismounting tires

installed on split rims, or rims equipped with locking rings or similar devices.

18.A.14 All rubber-tired motor vehicles shall be equipped with fenders, and tires shall not extend beyond fenders. Mud flaps may be used in lieu of fenders whenever motor vehicle equipment is not designed for fenders.

18.B OPERATING RULES

18.B.01

a. Operators of USACE motor vehicles/equipment or USACE employees using their vehicles on official business, either on or off USACE projects, and operators of Contractor motor vehicles/equipment being used on USACE projects may only use cellular telephones with hands-free devices while the vehicle is in motion. Prior to using a hand-held cellular phone, drivers shall find a safe place to bring their vehicle to a stop. This requirement does NOT preclude passenger(s) from using cellular phones while the vehicle is in motion. The use of headphones and earphones is prohibited while operating a motor vehicle/equipment.

b. Operators of USACE motor vehicles shall not eat, drink, or smoke while the vehicle is in motion. ***>See AR 385-55.***

18.B.02 The principles of defensive driving shall be practiced. Operators of Army motor vehicles shall receive Defensive Driving Training every 4 years.

18.B.03 Seat belts shall be installed and worn per 16.B.08. Buses are exempt from this requirement.

18.B.04 At all times, the operator must have the vehicle under control and be able to bring it to a complete stop within a safe stopping distance.

18.B.05 Vehicles may not be driven at speeds greater than the posted speed limit, with due regard for weather, traffic, intersections, width and character of the roadway, type of motor vehicle, and any other existing condition.

18.B.06 Headlights shall be switched to low beam when approaching other vehicles.

18.B.07 Headlights shall be lighted from sunset to sunrise, during fog, smoke, rain, or other unfavorable atmospheric conditions, and at any other time when there is not sufficient light for the vehicle to be seen or the operator to see on the highway at a distance of 500 ft (150.4 m).

18.B.08 Vehicles shall not be driven on a downgrade with gears in neutral or clutch disengaged.

18.B.09 Railroad crossings and drawbridges.

a. Upon approaching a railroad crossing or drawbridge, vehicles shall be driven at such a speed as to permit stopping before reaching the nearest track or the edge of the draw and shall proceed only if the course is clear.

b. Vehicles transporting 15 or more persons, explosives, or flammable or toxic substances shall stop at railroad crossings and drawbridges and shall not proceed until the course is clear, except at a railroad crossing or drawbridge protected by a traffic officer or a traffic signal giving a positive indication for approaching vehicles to proceed.

18.B.10 Vehicles shall not be stopped, parked, or left standing on any road, or adjacent thereto, or in any area in a manner as to endanger the vehicle, other vehicles, equipment, or personnel using or passing that road or area.

18.B.11 Vehicles shall not be left unattended until the motor has been shut off, the key removed (unless local regulations prohibit), parking brake set, and gear engaged in low, reverse, or park. If

stopped on a hill or grade, front wheels shall be turned or hooked into the curb or the wheels securely chocked.

18.B.12 Vehicles carrying loads that project beyond the sides or rear of the vehicle shall carry a red flag, not less than 144 in^2 (900 cm^2), at or near the end of the projection. At night or when atmospheric conditions restrict visibility, a warning light shall be used in lieu of the red flag. Drivers will assure the load does not obscure vehicle lights and/or reflectors.

18.B.13 Employees shall not be permitted to get between a towed and towing vehicle except when hooking or unhooking.

18.B.14 No vehicle or combination of vehicles hauling unusually heavy loads or equipment shall be moved until the driver has been provided with the required permits, the correct weights of the vehicles and load, and a designated route to be followed.

18.B.15 When backing or maneuvering, operators will take the applicable precautions outlined in 08.B.04. If a signal person or spotter is not used, operators will walk behind their vehicle to view the area for possible hazards before backing their vehicle.

18.B.16 When a bus, truck, or truck-trailer combination is disabled or parked on a highway or the adjacent shoulder, red flags shall be displayed during the daytime and reflector, flares, or electric lights shall be displayed at night.

18.B.17 Loading vehicles.

a. Drivers of trucks and similar vehicles shall leave the cab while the vehicle is being loaded when they are exposed to danger from suspended loads or overhead loading equipment, unless the cab is adequately protected.

b. Vehicles shall not be loaded in a manner that obscures the driver's view ahead or to either side or which interferes with the safe operation of the vehicle.

c. The load on every vehicle shall be distributed, chocked, tied down, or secured. Loads shall be covered when there is a hazard of flying/falling dirt, rock, debris, or material. End gates shall not be removed without implementing a positive means to prevent material from falling out of the back of the vehicle and may be done only with the acceptance of the GDA.

18.C TRANSPORTATION OF PERSONNEL

18.C.01 The number of passengers in passenger-type vehicles shall not exceed the number that can be seated.

18.C.02 Trucks used to transport personnel shall be equipped with a securely anchored seating arrangement, a rear end gate, and guardrail. Steps or ladders, for mounting and dismounting, shall be provided.

18.C.03 All tools and equipment shall be guarded, stowed, and secured when transported with personnel.

18.C.04 No person will be permitted to ride with arms or legs outside of a vehicle body; in a standing position on the body; on running boards; seated on side fenders, cabs, cab shields, rear of the truck, or on the load.

18.C.05 All vehicles transporting personnel during cold or inclement weather shall be enclosed. Passengers shall be protected from inclement weather elements.

18.C.06 Explosives, flammable materials (excepting normal fuel supply), or toxic substances may not be transported in vehicles carrying personnel.

18.C.07 Vehicles transporting personnel shall not be moved until the driver has ascertained that all persons are seated and the guardrails and rear end gates are in place or doors closed.

18.C.08 Getting on or off any vehicle while it is in motion is prohibited.

18.C.09 All motor vehicles shall be shut down prior to and during fueling operations. ***> See 16.A.15.***

18.D ALL TERRAIN VEHICLES (ATV)

18.D.01 Every ATV operator shall have completed a nationally-recognized accredited ATV training course (such as provided by the Specialty Vehicles Institute of America or in-house resources that have been certified as trainers by an accredited organization) prior to operation of the vehicle. The operator must pass an operating skills test prior to being allowed to operate an ATV. Proof of completion of this training shall be made available to the GDA upon request.

18.D.02 The manufacturer's recommended payload shall not be exceeded at any time.

18.D.03 Gloves and an approved motorcycle helmet with full-face shield or goggles shall be worn at all times while operating a Class I ATV.

18.D.04 ATVs shall be used only off-road (no paved road use unless allowed by the manufacturer).

18.D.05 ATVs shall be driven during daylight hours (unless properly equipped with lights for night use).

18.D.06 Only ATVs with four or more wheels may be used.

18.D.07 Passengers are prohibited on Class I ATVs.

18.D.08 All ATVs shall be equipped with a warning signal device (horn), tail lights, and stop lights.

18.D.09 A copy of the operators manual will be kept on the vehicle and protected from the elements (if practicable).

18.D.10 Tires shall be inflated to the pressures recommended by the manufacturer.

18.D.11 ATVs will be equipped with mufflers.

18.D.12 All ATVs shall be equipped with spark arresters.

18.D.13 All Class II ATVs shall be equipped with ROPS.

18.E AIRCRAFT

18.E.01 All non-military aircraft shall be registered, certified in the appropriate category, and maintained in accordance with the airworthiness standards of the FAA. (If used OCONUS, and not prohibited by other regulation such as ER 95-1-1, registration, certification, and maintenance in accordance with the standards of a comparable governing body of foreign or international authority may be substituted for those of the FAA.)

18.E.02 All contract pilots or pilots of chartered aircraft shall hold at least a commercial pilot certificate with instrument rating. All pilots of non-military aircraft shall possess ratings to comply with the FAA Regulation governing the aircraft and operations involved.

18.E.03 All non-military aircraft shall be equipped with a two-way radio.

18.E.04 All non-military flight operations shall be in accordance with the FAA rules governing conduct for the specific operation. (Examples are 14 CFR 133 (Federal Aviation Regulation 133); 14 CFR 135 (Federal Aviation Regulation 135); and 14 CFR 91 (Federal Aviation Regulation 91).

18.E.05 All military flight operations shall be conducted under appropriate DOT/DOD regulations, such as the AR 95 Series.

SECTION 19

FLOATING PLANT AND MARINE ACTIVITIES

19.A GENERAL

19.A.01 Floating plant inspection and certification.

a. All floating plant that are regulated by the USCG shall have current inspections and certificates issued by the USCG before being placed in service and a copy shall be posted in a public area on board the vessel. A copy of any USCG Form 835 issued to the vessel in the preceding year shall be available to the GDA and a copy shall be on board the vessel.

b. All dredges and quarter boats not subject to USCG inspection and certification or not having a current ABS classification shall be inspected in the working mode annually by a marine surveyor accredited by the National Association of Marine Surveyors (NAMS) or the Society of Accredited Marine Surveyors (SAMS) and having at least 5 years experience in commercial marine plant and equipment. All other plant shall be inspected before it is placed in use and at least annually by a qualified person. The inspection shall be documented, a copy of the most recent inspection report shall be posted in a public area on board the vessel, and a copy shall be furnished to the GDA upon request. The inspection shall be appropriate for the intended use of the plant and shall, as a minimum, evaluate structural condition and compliance with NFPA 302.

c. Periodic inspections and tests shall assure that a safe operating condition is maintained.

d. Records of inspections shall be maintained at the site and shall be available to the GDA.

e. Floating plant found in an unsafe condition shall be taken out of service and its use prohibited until unsafe conditions have been corrected.

19.A.02 Personnel qualifications.

a. Officers and crew shall be in possession of a current, valid USCG license, which shall be posted in a public area on board the vessel, or correctly endorsed document as required by the USCG.

b. Government operators shall be licensed or certified in accordance with the requirements outlined in ER 385-1-91. Officers and crew of floating plant shall be licensed and/or documented by the USCG when the plant is subject to one or more of the following criteria:

(1) The vessel is inspected and certified by USCG in accordance with EP 1130-2-500, Appendix L,

(2) The vessel is normally engaged in or near a channel or fairway in operations that restrict or affect navigation of other vessels and required by law to be equipped with radio-telephones of the 156-162 band frequency, or

(3) Floating plant is engaged in the transfer of oil or hazardous material in bulk.

c. A USCG Radar Observers endorsement on licenses is required for all Operators of Uninspected Towing Vessels, Masters, and Pilots on radar-equipped vessels 26 ft (7.9 m) or more in length. Endorsements must be issued from a USCG-approved training facility.

d. Government operators of floating plant that does not meet the criteria of 19.A.02b(1), above, shall be licensed and certified in accordance with the requirements of ER 385-1-91. A qualified individual designated as the USACE Command's marine licensing official will perform licensing and certification.

e. Individuals shall not be scheduled to work more than 12 hours in any 24-hour period. Work schedules should consider fatigue factors and optimize continuous periods available for uninterrupted sleep. The employee is responsible for reporting to work properly rested and fit for duty.

(1) All personnel shall be scheduled to receive a minimum of 8 hours rest in any 24-hour period. When quarters are provided immediately adjacent to or aboard the work site, these hours of rest may be divided into no more than two periods, one of which must be at least 6 continuous hours in length. All cases exclude travel time.

(2) Rest periods may be interrupted in case of emergency, drill, or other overriding operational necessity.

(3) Due to events listed in paragraph (2), the total minimum daily 8 hours of rest may be reduced to not less than 6 consecutive hours as long as no reduction extends beyond 2 days and not less than 56 hours of rest are provided in each 7-day period.

19.A.03 Severe weather precautions.

a. Where floating plant may be endangered by severe weather (including sudden and locally severe weather, storms, high winds, hurricanes, and floods) plans shall be made for removing or securing plant and evacuation of personnel in emergencies. ***>(See 06.J.01).*** This plan shall be part of the AHA and shall include at least the following:

(1) A description of the types of severe weather hazards the plant may potentially be exposed to and the steps that will be taken to guard against the hazards;

(2) The time frame for implementing the plan (using as a reference the number of hours remaining for the storm to reach the work site if it continues at the predicted speed and

direction), including the estimated time to move the plant to the safe harbor after movement is started;

(3) The name and location of the safe location(s).

(4) The name of the vessel(s) that will be used to move any non-self-propelled plant, and their type, capacity, speed, and availability;

(5) River/tide gage readings at which floating plant must be moved away from dams, river structures, etc., to safe areas;

(6) Method for securing equipment if not moved.

b. Extended movement of floating plant and tow shall be preceded by an evaluation of weather reports and conditions by a responsible person to ascertain that safe movement of the plant and tow can be accomplished.

c. Work or task orders shall be preceded by an evaluation of weather reports and conditions by a responsible person to ascertain that safe working conditions exist and safe refuge of personnel is assured.

d. USCG approved PFD (types I, II, III, or V) shall be worn by all personnel on decks exposed to severe weather, regardless of other safety devices used. Inflatable PFDs will not be worn by workers on USACE sites.

e. A sufficient number of vessels of adequate size and horsepower, each designed, outfitted, and equipped for towing service, shall be available at all times to move both self- and non-self-propelled plant against tides, current, and winds during severe weather conditions.

f. Contractors working in an exposed marine location shall monitor the National Oceanic and Atmospheric Administration (NOAA) marine weather broadcasts and shall use other local commercial weather forecasting services as may be available.

g. The floating plant shall be capable of withstanding whatever sea conditions may be experienced in the work area during the time period the work is being performed. The generally accepted terminology for that capability is (1) “seaworthiness,” (2) good “seakeeping” qualities.

19.A.04 Emergency planning.

a. Plans shall be prepared for response to marine emergencies such as fire, sinking, flooding, severe weather, man overboard, hazardous materiel incidents, etc. (Fire: USCG-approved fire plans meet this requirement.) ***> See 01.E.***

b. A station bill, setting forth the special duties and the duty station of each crewmember for various emergencies, shall be prepared and posted in conspicuous locations throughout the vessel.

c. Each crewmember shall be given a written description of, and shall become familiar with, his/her emergency duties and shall become familiar with the vessel's emergency signals.

d. "Abandon ship/boat" and "person overboard" procedures shall include instructions for mustering personnel.

e. On all floating plant that have a regular crew or on which people are quartered, the following drills shall be held at least monthly during each shift (unless the vessel is required, under USCG regulations, to be drilled more frequently): abandon ship/boat drills, fire drills, and person overboard or rescue drills.

(1) The first set of drills shall be conducted within 24 hours of the vessel's occupancy or commencement of work.

(2) Where crews are employed or quartered at night, every fourth set of drills shall be at night; the first set of night drills shall be conducted within the first 2 weeks of the vessel's occupancy.

(3) Drills shall include, where appropriate, how to handle a pump shell or pipe rupture or failure within the hull (proper shutdown procedures, system containment, etc.) and how to handle leaks or failures of the hull or portions of it (what compartments to secure, how to handle power losses, pulling spuds to move to shallow water, etc.).

f. Person overboard or rescue drills shall be held at least monthly at boat yards, locks, dams, and other locations where marine rescue equipment is required.

g. Emergency lighting and power systems shall be operated and inspected at least monthly to ensure proper operation.

(1) Internal combustion engine driven emergency generators shall be operated under load for at least 2 hours each month.

(2) Storage batteries for emergency lighting and power systems shall be tested at least once every 2 months.

h. A record of all drills and emergency system checks, including any deficiencies noted in equipment and corrective action taken, shall be made in the station log.

19.A.05 Equipment requirements.

a. Fenders shall be provided to prevent damage and sparking and to provide safe areas for workers exposed to pinching situations caused by floating equipment.

b. Axes or other emergency cutting equipment shall be sharp and provided in accessible positions on all towing vessels for use such as freeing lines. On other floating plant (such as work barges, and floating cranes) emergency cutting equipment shall be provided in accessible positions.

c. Signal devices shall be provided on all vessels to give signals required by the navigation rules applicable to the waters on which the vessel is operated.

d. All controls requiring operation in cases of emergency (such as boiler stops, safety valves, power switches, fuel valves, alarms, and fire extinguishing systems) shall be located so that they are protected against accidental operation but are readily accessible in an emergency.

e. Electric lights used on or around gasoline and oil barges or other marine locations where a fire or explosion hazard exists shall be explosion-proof.

f. General alarm systems shall be installed and maintained on all floating plant where it is possible for either a passenger or crewman to be out of sight or hearing from any other person.

(1) Where general alarm systems are used they shall be operated from the primary electrical system with standby batteries on trickle charge that will automatically furnish the required energy during an electrical-system failure.

(2) A sufficient number of signaling devices shall be placed on each deck so that they can be distinctly heard/seen above the normal background noise at any point on the deck.

(3) All signaling devices shall be so interconnected that actuation can occur from at least one strategic point on each deck.

g. Smoke alarms are required for all living quarters of floating plant; smoke alarms, if wired, should use the same electrical system as that of the electrical alarms.

h. For floating plant with internal combustion engines, marine quality listed CO monitors shall be installed and maintained in all enclosed occupied spaces (crew quarters, pilot houses, etc.).

i. All doors shall be capable of being opened from either side and provided with positive means to secure them in both the open and closed position.

j. Escape hatches and emergency exits shall be marked on both sides with letters, at least 1 in (2.5 cm) high, stating "**EMERGENCY EXIT - KEEP CLEAR**."

k. Each prime mover (engine, turbine, motor) driving a dredge pump shall be capable of being stopped by controls remote from the prime mover locations.

l. Shore power receptacles shall have a grounding conductor to prevent potential difference between the shore and the vessel.

m. Circuits with GFCI protection shall be provided in grounded 120, 208 or 240 volt systems in toilet/shower spaces, galley, machinery spaces, weather deck, exterior, or within 3 ft (0.9 m) of any sinks.

(1) Cord connected equipment used in any of the above areas shall be connected to a GFCI outlet.

(2) Portable GFCI units connected to ungrounded systems DO NOT provide ground-fault protection and shall not be used.

(3) Ground-fault protected receptacles shall be conspicuously marked **"GFCI PROTECTED"**.

n. Where appropriate, vessels should have watertight compartments readily identified and properly maintained in a watertight condition (i.e., sealable doors in place and fully functional) and all penetrations maintained in a watertight condition.

o. All winch gears shall be properly guarded. ***> See 16.B.03.***

19.A.06 Fuel systems and fuel transfers. The provisions of the Oil Pollution Act of 1990, as amended, shall apply to floating plant operations as applicable.

a. Gauge glasses or try cocks shall not be installed on fuel tanks or lines unless they meet the requirements of 46 CFR 58.50-10.

b. A shutoff valve shall be installed at the fuel tank connection: arrangement shall be made for operating this valve from outside the compartment in which the tank is located and from outside the engine compartment and outside the house bulkheads at or above the weather deck of the vessel.

c. A shutoff valve shall be installed at the engine end of the fuel line unless the length of the supply pipe is 6 ft (1.8 m) or less.

d. All carburetors on gasoline engines shall be equipped with a backfire trap or flame arrestor.

e. All carburetors, except down-draft type, shall be provided with a drip pan, with flame screen, that is continuously emptied by suction from the intake manifold or by a waste tank.

f. Fuel and lubricant containers and tanks shall be diked or curbed to contain the tank contents in case of leakage in accordance with 46 CFR 64, 46 CFR 98.30, and 33 CFR 155.320. In lieu of a dike or curb, other means complying with USCG requirements in 46 CFR 64 and 46 CFR 98.30 may be used.

g. Fuel oil transfers for floating plant shall be in accordance with the provisions of USCG regulations, 33 CFR 155, and/or 33 CFR 156. For uninspected vessels, USCG regulations in 33 CFR 156.120 and 33 CFR 155.320 for fuel coupling devices and fuel oil discharge containment apply. Venting fuel tanks is necessary when using the couplings prescribed by 33 CFR 156.120(1) or (2).

h. All decks, overheads, and bulkheads, serving as fuel oil tank boundaries shall indicate the tank boundary with contrasting paint and be labeled **"FUEL OIL TANK-NO HOT WORK"**.

19.A.07 Safe practices.

a. Obstructing cables/lines that cross waterways between floating plant or between plant and mooring shall be clearly marked.

b. On all floating plant where people are quartered, one person shall be on watch at all times to guard against fire and provide watch person service. In lieu of a watch person, an automatic fire detection and fire and emergency warning system(s) may be used.

c. Provisions shall be made to prevent accumulation of fuel and grease on floors and decks and in bilges.

d. Swimming shall be prohibited for all personnel on floating plant and other marine locations, except certified divers in the performance of their duties, unless necessary to prevent injury or loss of life.

e. A person in the water shall be considered as a person overboard and appropriate action shall be taken.

f. When barriers or blanks are installed in piping systems as a lock-out procedure, positive means (such as protruding handles) shall be used to easily recognize their presence. All barriers shall be marked (including name of installer, name of inspector, and date of installation) and accounted for prior to installation and subsequent to removal.

g. Deck loading will be limited to safe capacity. Loads will be secured and holdbacks or rings will be provided to secure loose equipment during rough weather.

h. Guardrails, bulwarks, or taut cable guard lines shall be provided for deck openings, elevated surfaces, and similar locations where persons may fall or slip from them.

(1) On USCG inspected vessels, guardrails and taut cable guard lines shall comply with the USCG requirements set forth in 46 CFR 45.92.25-5. The guardrails shall be 39 in (99 cm) in height with two mid rails (if not solid). The first being 9 in (22.8 cm) above the deck and the second 24 in (60.9 cm) above the deck.

(2) For uninspected vessels and other marine plant, the guardrails and guardlines shall meet the requirements of Section 21.B.

(3) In those areas where it is not practical or safe to install guardrails, personnel working on unguarded platforms, catwalks, decks and other surfaces at heights greater than 6 ft (1.8 m) above hard surfaces such as adjacent decks or ground level shall be provided with and wear appropriate personal fall protection systems. (The guardrail requirement does not apply to anchor barges or work deck areas on crane barges where the installation of guardrails would present a safety hazard.)

i. Safeguards such as barriers, curbs, or other structures shall be provided to prevent front-end loaders, bulldozers, trucks, backhoes, track hoes, and similar operating equipment on floating equipment from falling into the water. ***> See also 16.F.06.***

j. Projection and tripping hazards shall be removed, identified with warning signs, or distinctly marked with safety yellow.

k. Deck cargo carried on fuel barges shall be placed on dunnage.

l. When two or more pieces of floating plant are being used as one unit, they shall be securely fastened together to prevent

openings between them or the openings shall be covered or guarded.

m. All anchor points shall be clearly identified and shall be inspected prior to applying a load or putting cables under tension. Anchor points not structurally sound shall be cut out, removed, and/or welded over to preclude usage. Visual checks and "all clear" warnings shall be made prior to tensioning cables.

n. Provisions shall be made to protect persons being transported by water from the elements.

o. Plant fleeting areas will be designated in which all idle plant shall be moored. Such areas shall have warning buoys, signs, and lights in prominent locations.

p. The Contractor, or for Government conducted operations, the GDA shall provide information to the local USCG Office identifying the marine activity and hazards.

q. Open or pelican hooks may be used for lifting anchor buoys.

19.A.08 Confined spaces. ***> See Section 06.I.***

a. Every floating plant shall be surveyed for the presence of confined spaces. A list of all confined spaces shall be maintained on board the vessel/floating plant: on those vessels without a location to maintain the list (e.g., a barge), the list shall be maintained at the worksite.

b. All PRCS on floating plant shall be indicated with a sign or placard, or similar device.

19.A.09 When there is a potential for marine activities to interfere with or damage utilities or other structures, including those underwater, a survey shall be conducted to identify the utilities or structures in the work area, analyze the potential for interference or

damage, and recommend steps to be taken to prevent the interference or damage.

19.A.10 Ventilation.

a. All motor vessels or boats powered by internal combustion engines having electric spark ignition systems or having auxiliary engines of this type in cabins, compartments, or confined spaces shall be equipped with an exhaust fan(s) for ventilating engine space and bilges.

b. At least two ventilators fitted with fans capable of ventilating each machinery space and fuel tank compartment, including bilges, shall be provided to remove any flammable or explosive gases, except those vessels constructed with the greater portions of the bilges open or exposed to the natural atmosphere at all times. ***> Note this requirement does not apply to diesel engines.***

c. Other compartment spaces within a vessel, not covered in this Section, may be naturally vented.

d. All living spaces, including the galley, shall be adequately ventilated in a manner suitable to the purpose of the space.

e. For launches and motorboats having diesel power plants not equipped with fans, ventilating shall be by natural draft through permanently open inlet and outlet ducts extending into the bilges. Inlet and exhaust ducts shall be equipped with cowls or exhaust heads.

f. For launches, motorboats (survey boats), and skiffs having deck mounted internal combustion engines (such as generators, jigger pumps) and not equipped with fans, shall locate exhaust piping away from personnel spaces to minimize CO infiltration in the work space.

g. Vent and ventilator requirements.

(1) Fans shall be rated for Class I hazardous locations and located as remotely from potential explosive areas as practical. ***> See 11.G.***

(2) The vent intake shall extend to within 1 ft (0.3 m) of the bottom of the compartment.

(3) Means shall be provided for stopping all fans in ventilation systems serving machinery components and for closing all doorways, ventilators, chases, and annular spaces around tunnels and other openings from outside these spaces in case of fire.

h. Engines shall not be started until the engine space and bilges have been ventilated to remove fuel vapor.

19.A.11 The most current, pertinent information published by the USCG regarding aids to navigation shall be maintained aboard self-propelled vessels 26 ft (7.9 m) or more in length.

19.B ACCESS

19.B.01 General. ***> See also 19.A.07h.***

a. All means of access shall be properly secured, guarded, and maintained free of slipping and tripping hazards. ***> See Section 21.***

b. Non-slip surfaces shall be provided on all working decks, stair treads, ship ladders, platforms, catwalks, and walkways, particularly on the weather side of all doorways opening on deck.

c. Grab bars shall be provided on the sides of superstructure of tugs, tenders, and launches except where railing is present.

Grab bars will be placed as close as possible to 42 in (106.6 cm) above the deck.

d. Double rung or flat tread type Jacob's ladders shall be used only when no safer form of access is practical: when in use, they shall hang without slack and be properly secured.

e. Vertical and inclined ladders shall comply with ASTM F1166

19.B.02 Access to/from vessels.

a. Safe means for boarding or leaving a floating plant shall be provided and guarded to prevent persons from falling or slipping thereon. (Walking on rip-rap should be avoided where practical.)

b. A stairway, ladder, ramp, gangway, or personnel hoist shall be provided at all personnel points of access with breaks of 19 in (48.2 cm) or more in elevation.

c. Ramps for access of equipment and vehicles to or between vessels shall be of adequate strength, be provided with sideboards, and be well maintained.

d. Gangways and ramps shall be:

(1) Secured at one end by at least one point on each side with lines or chains to prevent overturning,

(2) Supported at the other end in such a manner to support them and their normal loads in the event they slide off their supports,

(3) Placed at an angle no greater than that recommended by the manufacturer, and

(4) Provided with a standard guardrail (toe boards are optional depending on their usefulness and the hazard involved).

19.B.03 Access on vessels.

a. Vertical access shall be provided between various decks by means of stairs or permanent inclined ladders installed in accordance with ASTM F1166-95a.

b. Employees shall not be permitted to pass fore and aft, over, or around deck loads unless there is a safe passage.

c. If cargo or materials are stored on deck of barges, scows, floats, etc., the outboard edge shall not be used as a passageway unless at least 2 ft (0.6 m) of clearance is maintained.

d. Vessel loads shall be limited so that access and passageways in use will remain above the waterline. Decks and passageways shall not be used for access if submerged or subject to constant breaking waves, except in an emergency.

19.B.04 Emergency access.

a. All vessels, except those easily boarded from the water, shall be equipped with:

(1) At least one portable or permanent ladder of sufficient length to allow a person to self-rescue by boarding the ladder from the water, and

(2) Other methods or means designed to assist in the rescue of an incapacitated person overboard.

b. Two means of escape shall be provided for normal work, assembly, sleeping, and messing areas on floating plants.

c. Means of access shall be maintained safe and functional.

19.B.05 Access on floating pipelines.

a. All floating pipelines used as access ways shall be equipped with a walkway and handrail on at least one side.

b. Walkways shall be at least 20 in (50.8 cm) wide and anchored to the pipeline. The use of PFDs is also required. ***> See 05.I.***

c. When walkways and handrails are not provided (i.e., the pipeline is not intended for access), the pipeline shall be barricaded at both ends to prevent access by any person.

19.C LAUNCHES, MOTORBOATS, AND SKIFFS

19.C.01 Crew requirements.

a. In the following circumstances a qualified employee shall be assigned to assist with deck duties:

(1) When extended trips including overnight trips are made from the work site,

(2) When conditions of navigation make it hazardous for an operator to leave the wheel while underway,

(3) When operations being performed, other than tying-in, require the handling of lines,

(4) When operating at night or during inclement weather, or

(5) When towing.

b. A qualified employee is any individual who has established, to the satisfaction of the operator of the vessel, that he/she is

physically and mentally capable of adequately performing the deck duties to which he/she may be assigned.

19.C.02 Personnel and cargo requirements.

a. The maximum number of personnel and weight that can safely be transported shall be posted on all launches, motorboats, and skiffs. The number of personnel (including crew) shall not exceed the number of PFDs aboard.

b. Each boat shall have sufficient room, freeboard, and stability to safely carry the cargo and number of persons allowed with consideration given to the weather and water conditions in which it will be operated.

c. Launches, motorboats and skiffs less than 20 ft (6 m) in length shall meet 33 CFR 183 requiring level floatation after flooding or swamping.

d. All open cabin launches or motorboats shall be equipped with “kill (dead man) switches”.

19.C.03 Fire protection.

a. The minimum number and rating of fire extinguishers that shall be carried on all launches and motorboats, including outboards, are shown in Table 19-1:

TABLE 19-1

FIRE EXTINGUISHER REQUIREMENTS FOR LAUNCHES/MOTORBOATS

LENGTH	EXTINGUISHER
Less than 26 ft (7.9 m)	One 1-A:10-B:C
26 ft (7.9 m) or more	Two 1-A:10-B:C

b. All launches and motorboats having gasoline or liquid petroleum gas power plants or equipment in cabins, compartments, or confined spaces shall be equipped with a built-in automatic CO_2 fire extinguishing system meeting the requirements of 46 CFR 25.30-15.

19.C.04 Float Plans. Float plans containing the following information shall be prepared by the operator of a launch or motorboat when engaged in surveying, patrolling, or inspection activities that are remote and are expected to take longer than 4 hours or when the operator is traveling alone. The plan shall be filed with the boat operator's supervisor.

a. Vessel information (make/model or local identifier).

b. Personnel on-board.

c. Activity to be performed.

d. Expected time of departure, route, and time of return.

e. Means of communication (adequate means of communication shall be provided).

19.C.05 All motorboat operators shall complete and document the following training:

a. A boating safety course meeting the criteria of the USCG Auxiliary, National Association of Safe Boating Law Administrators (NASBLA), or equivalent; and

b. Motorboat handling training, based on the type of boats they will operate, provided by qualified instructors (in-house or other). Operators must pass a written and operational test

c. Current USCG licensed personnel are exempt from the boating safety training, but they shall complete the written exam and operational test.

19.D DREDGING

19.D.01 Prior to repair or maintenance on the pump, suction or discharge lines below the water line, or within the hull, the ladder (or drag arm) shall be raised (above the waterline) and positively secured. This provision is in addition to the normal securing of hoisting machinery. Blank or block plates shall also be set in suction or discharge lines as appropriate.

19.D.02 Dredge pipelines that are floating or supported on trestles shall display appropriate lights at night and in periods of restricted visibility in accordance with USCG regulations and 33 CFR 88.15.

19.D.03 Submerged and floating dredge pipeline.

a. Submerged pipeline and any anchor securing the pipeline shall rest on the channel bottom where a pipeline crosses a navigation channel. The depth of the submerged pipeline will be provided to the USCG for publication.

(1) Whenever buoyant or semi-buoyant pipeline is used, the dredge operator will assure that the pipeline remains fully submerged and on the bottom. Whenever it is necessary to raise the pipeline, proper clearances shall be made and maintained and the entire length of the pipeline will be adequately marked.

(2) Submerged pipelines shall be marked in accordance with local USCG requirements and as approved by the GDA.

(a) Unless otherwise specified by the USCG, submerged pipelines are considered to require special marks and shall have a USCG-approved flashing yellow light.

(b) Indicators, such as signs or buoys, that state **"DANGER SUBMERGED PIPELINE"** will be placed at the beginning and end of the pipeline. In addition, indicators are required beginning in areas which reduce

the charted depth by more than 10%, and, as a minimum, every 1000 ft (304.8 m) to clearly warn of the pipeline length and course.

(c) If barges or other vessels are used to anchor the beginning and/or end of the submerged pipeline, they shall be lighted in accordance with 33 CFR 88.13.

(d) Within a navigation channel, each end of the pipeline shall be identified with a regulatory marker buoy.

(e) Lengths of submerged pipeline located outside of the navigation channel, which reduce the charted depth by more than 10 percent, will be identified with high visibility buoys marked with 360 degree visibility retro-reflective tape, such as orange neoprene buoys, placed at an interval not to exceed 500 ft (152.4 m) to clearly show the pipeline length and course.

(3) Routine inspections of the submerged pipe shall be conducted to ensure anchorage.

(4) All anchors and related material shall be removed when the submerged pipe is removed.

b. Floating pipeline is any pipeline that is not anchored on the channel bottom. Floating pipeline, including rubber discharge hoses, shall be clearly marked in accordance with 33 CFR 88.15.

c. Pipelines shall not be permitted to fluctuate between the water surface and the channel bottom or lie partially submerged.

19.D.04 Dredges shall be designed so that a failure or rupture of any of the dredge pump components, including dredge pipe, shall not cause the dredge to sink. Data or plans supporting this capability must be available to the GDA upon request.

19.D.05 Mobilization, demobilization, and relocation of dredges, support barges, support tenders, tugs, and heavy equipment shall be by qualified persons under the direct supervision of a responsible individual.

19.D.06 Hopper dredges shall offer a safe means and process to load and unload personnel.

19.D.07 Any dredge that has a dredge pump below the waterline shall have a bilge alarm or shutdown interface.

19.D.08 Covers of "stone boxes" shall be secured with at least two positive means when the boxes are working under positive pressure.

19.D.09 Dredge disposal sites.

a. Drinking water. An adequate supply of drinking water shall be provided at all dredge disposal sites. Cool water shall be provided during hot weather. Portable drinking dispensers shall comply with Section 2 of this manual.

b. Toilet facilities. Toilet facilities shall be provided in accordance with and meet the requirements of Section 2 of this manual.

c. Medical and first-aid requirements. All disposal area watchmen shall be certified in first aid and CPR in accordance with 03.A.02. At least one 16-unit first-aid kit complying with ANSI Z308.1 shall be provided onsite at all times. The first-aid kit shall be protected from the environment.

19.E SCOWS AND BARGES

19.E.01 Scows dumping in open ocean waters should be equipped with remote opening devices to preclude the transfer of personnel between the vessels.

19.E.02 A safe means for transferring personnel between the towing vessels and scow shall be provided in accordance with 19.B.02.

19.E.03 The Contractor shall identify general and site-specific adverse weather and sea conditions (e.g., currents) under which the towing of scows or cargo barges is prohibited.

19.E.04 All barges and scows shall comply with 46 CFR 174.010 through 174.020 for intact stability of deck cargo barges.

19.E.05 Personal fall protection devices or other fall protection listed in 21.A.15 shall be used on all scows and open barges to prevent personnel transiting between the stern and bow of the vessel from falling into the hopper or falling off the side of the vessel to structures (e.g., dock, vessels) located 6 ft (1.8 m) or more below.

19.F NAVIGATION LOCKS AND LOCKING

19.F.01 Smoking, the use of open flame equipment, or other ignition sources shall be prohibited on lock structures within 50 ft (15.2 m) of vessels containing flammable or hazardous materials during lockage.

19.F.02 Pleasure and commercial recreational craft shall not be locked through a lock chamber with a vessel containing dangerous, flammable, or hazardous cargo.

a. Simultaneous lockage of two vessels or tows carrying dangerous cargoes containing flammable vapors, or simultaneous lockage of another vessel or tow carrying non-dangerous cargoes and vessel or tow carrying dangerous cargoes, shall not be permitted when river traffic in the approaches to a lock is light.

b. When the river approaches to a lock are congested, simultaneous lockage of the aforementioned vessels or tows, other than pleasure craft, shall be permitted provided:

(1) The first vessel or tow in and the last vessel or tow out are secured before the other enters or leaves;

(2) Any vessel or tow carrying dangerous cargoes is not leaking; and

(3) All masters involved have agreed to the joint use of the lock chamber.

c. Vessels with flammable or highly hazardous cargo will be passed separately from all other vessels. Hazardous materials are described in 49 CFR 171; flammable materials are defined in the National Fire Code of the NFPA.

SECTION 20

PRESSURIZED EQUIPMENT AND SYSTEMS

20.A GENERAL

20.A.01 Inspections and tests - general.

a. Pressurized equipment and systems shall be inspected and performance tested before being placed in service and after any repair or modification.

b. Unless State or local codes specify more frequent inspection, temporary or portable pressurized equipment and systems shall be inspected at intervals of not more than 6 months and permanent installations shall be inspected at least annually.

c. Inspections of pressure vessels prior to being placed in service shall be in accordance with the ASME "*Boiler and Pressure Vessel Code.*" In-service inspections of pressure vessels shall be in accordance with the National Board of Boiler and Pressure Vessel Inspectors (NBBI), "*National Board Inspection Code*."

d. Inspections and tests will be performed by personnel qualified in accordance with the ASME Code or the NBBI.

20.A.02 Hydrostatic testing.

a. Unless otherwise specified by State or local codes, hydrostatic testing of unfired pressured vessels shall be performed:

(1) When vessels are installed,

(2) When vessels are placed in service after lay-up,

(3) After any repairs or modifications,

(4) Every 3 years,

(5) If the vessel shows any rust or other deterioration, or

(6) When conditions found during inspections warrant tests.

b. The following unfired vessels are exempt from this requirement:

(1) Vessels designed for a maximum allowable pressure not exceeding 15 psi (103.4 kPa).

(2) Vessels having an internal volume of 5 cubic feet (ft^3) (0.14 m^3) or less and a maximum pressure of 100 psi (689.4 kPa).

(3) Compression tanks containing water under pressure not exceeding 100 psi (689.4 kPa) and temperatures not exceeding 200 °F (93.3 °C).

(4) Compression tanks containing water and fitted with a permanent air charging line subject to pressures not exceeding 15 psi (103.4 kPa) and temperatures not exceeding 200 °F (93.3 °C).

(5) Fire extinguishers. ***> See Section 9***.

(6) For vessels with inspection doors (such as oil-filled (governor) pressure tanks), hydrostatic tests need only be given to repaired, modified, or deteriorated tanks. Inspections to determine deterioration will be made every 2 years for external condition and every 4 years for internal condition.

20.A.03 Records of the inspections and tests shall be available for review on request. A certificate shall be posted near the vessel controls prior to operation of the equipment.

20.A.04 Tests for structural integrity or leaks using pressurized gases, such as air, are prohibited, except for testing of bulk petroleum, oil, and lubricant (POL) storage tanks under API standards.

20.A.05 Any pressurized equipment or system found to be in an unsafe operating condition shall be tagged **"OUT OF SERVICE - DO NOT USE"** at the controls and its use shall be prohibited until the unsafe conditions have been corrected.

20.A.06 Pressurized equipment and systems shall be operated and maintained only by qualified, designated personnel.

20.A.07 The normal operating pressure of pressurized equipment and systems shall not exceed the design pressure.

20.A.08 No safety appliance or device shall be removed or made ineffective, except for making immediate repairs or adjustments, and then only after the pressure has been relieved and the power shut off.

20.A.09 Repairs or adjustments to equipment or systems under pressure require a safe clearance procedure.

20.A.10 The discharge from safety valves, relief valves, and blowoffs shall be located so that it is not a hazard to personnel.

20.A.11 Master valves and controls shall be either located or equipped to permit operation from the floor level or they shall be provided with safe access.

20.A.12 A pressure gauge shall be provided on all pressurized equipment and systems.

20.A.13 Safety and relief valves shall be provided on all pressurized equipment and systems.

a. A safety relief valve setting not more than 10% over working pressure is recommended. In no case shall the safety relief valve setting be higher than the maximum allowable pressure of the receiver or the system.

b. No valve shall be placed between the pressure vessel or generating equipment and a safety or relief valve or between the safety or relief valve and the atmosphere.

c. Adjustments and settings of safety relief valves must be made by a trained mechanic with equipment designed for valve adjustment. Valves shall be sealed after adjustment.

d. In the event that the pressure registers above the maximum allowable working pressure on the gauge without the safety or relief valve operating, the pressure gauge shall be checked immediately. If such check indicates that the safety or relief valve is inoperative, the equipment shall be removed from service until the safety or relief valve has been adjusted or replaced.

20.A.14 Piping shall meet requirements of the ANSI/AMSE B31.1.

20.A.15 Pressurized manual equipment, subject to whipping or rotation if released, shall be provided with an automatic shut-off or control of the dead-man type.

20.A.16 Quick makeup connections shall be secured with a safety lashing.

a. Safety lashings shall consist of two metal hose clamps connected by a flexible lacing: the metal hose clamps shall be attached to the hose ends separate from the quick makeup connection.

b. The flexible lacing shall be suitably strong cables, chains, or wires: wires or pins through the quick makeup connection are not acceptable for use as safety lashings.

20.A.17 All pressurized cylinders, actuating booms, outriggers, or other load supporting appliances shall be equipped with pilot check valves, holding valves, or positive mechanical locks to prevent movement in case of failure in the pressure system. Replacement of pressure system fittings shall be with new parts equivalent to the manufacturer's standards.

20.B COMPRESSED AIR AND GAS SYSTEMS

20.B.01 Standards.

a. Air receivers shall be constructed in accordance with the ASME "*Code for Unfired Pressure Vessels*."

b. All safety valves used shall be constructed, installed, tested, and maintained in accordance with the ASME "*Code for Unfired Pressure Vessels*."

20.B.02 Access and guarding.

a. Compressors and related equipment shall be located to provide safe access to all parts of the equipment for operation, maintenance, and repairs.

b. Safety appliances, such as valves, indicating devices, and controlling devices, shall be constructed, located, and installed so that they cannot be readily rendered inoperative by any means, including the elements.

20.B.03 Air hose, pipes, valves, filters, and other fittings shall be pressure rated by the manufacturer and this pressure shall not be exceeded. Defective hose shall be removed from service.

20.B.04 Hose shall not be laid over ladders, steps, scaffolds, or walkways to create a tripping hazard.

20.B.05 Compressed air for cleaning.

a. The use of compressed air for blowing dirt from hands, face, or clothing is prohibited.

b. Compressed air shall not be used for other cleaning purposes except where reduced to less than 30 psi (206.8 kPa) and then only with effective chip guarding and PPE. This 30 psi (206.8 kPa) requirement does not apply for concrete forms, mill scale, and similar cleaning purposes.

20.B.06 When used on tools and equipment such as track drills, all airlines exceeding 0.5 in (1.2 cm) inside diameter shall have a safety device at the source of supply or branch line to reduce pressure in case of hose failure.

20.B.07 Governors.

a. A speed governor, independent of the unloaders, shall be installed on all air compressors except those driven by electrical induction or electrical synchronized motors.

b. If the air compressor is engine or turbine driven, an auxiliary control to the governor shall be installed to prevent racing when the unloader operates.

20.B.08 Every air compressor shall automatically stop its air-compressing operation before the discharge pressure exceeds the maximum working pressure allowable on the weakest portion of the system.

a. If this automatic mechanism is electrically operated, the actuating device shall be so designed and constructed that the electrical contact or contacts cannot lock or fuse in a position that will cause the compressor to continue its operation.

b. An air bypass and alarm may be used as an alternative.

20.B.09 Provision shall be made to exclude flammable materials and toxic gases, vapors, or dusts from the compressor and to prevent steam, water, or waste being blown or drawn into a compressor intake.

20.B.10 No valve shall be installed in the air intake pipe to an air compressor with an atmospheric intake.

20.B.11 The air discharge piping from the compressor to the air receiver shall be at least as large as the discharge opening on the air compressor.

20.B.12 A stop valve shall be installed between the air receiver and each piece of stationary utilization equipment at a point convenient to the operator, and a stop valve shall be installed at each outlet to which an air hose may be attached.

20.B.13 If a stop valve is installed between the compressor and the receiver, spring-loaded safety valves shall be installed between the air compressor and the stop valve.

a. The capacity of safety valves shall be sufficient to limit pressure in the air discharge piping to 10% above the working pressure of the piping.

b. Stop valves shall preferably be of the gate type. If a globe valve is used, it shall be installed so that the pressure is under the seat and that the valve will not trap condensation.

20.B.14 Provision shall be made in compressed air and gas systems for expansion and contraction and to counteract pulsation and vibration.

20.B.15 Piping shall be equipped with traps or other means for removing liquid from the lines.

20.B.16 Air discharge piping shall be installed to eliminate possible oil pockets.

20.B.17 Installation and location of air receivers.

a. Air receivers shall be installed so that all drains, hand holes, and manholes are accessible.

b. Air receivers should be supported with sufficient clearance to permit a complete external inspection and to avoid corrosion of external surfaces.

c. An air receiver shall not be buried underground or located in an inaccessible place.

d. The receiver should be located to keep the discharge pipe as short as possible.

e. The receiver should be located in a cool place to facilitate condensation of moisture and oil vapors.

20.B.18 A drain valve shall be installed at the lowest point of every air receiver for the removal of accumulated oil and water.

20.B.19 Automatic traps may be installed in addition to drain valves.

20.B.20 The drain valve on the air receiver shall be opened and the receiver drained often enough to prevent the accumulation of excessive liquid in the receiver.

20.B.21 No tool change or repair work shall be done until the stop valve in the air line supplying the equipment is closed.

20.B.22 Soapy water or any suitable non-toxic, non-inflammable solution may be used for cleaning the system.

20.B.23 Hose and hose connections used for conducting compressed air to utilization equipment shall be designed for the pressure and service to which they are subjected.

20.C BOILERS AND SYSTEMS

20.C.01 Provisions of the ASME "*Boiler and Pressure Vessel Code*" shall apply in the construction, operation, maintenance, and inspection of steam boilers and pressure vessels.

20.C.02 Inspection.

a. Inspections shall be made to assure that all safety devices affecting operation of the firing equipment are installed in such a location that they cannot be isolated from the heat source by the closing of a valve.

b. Boilers that have undergone major structural repairs or that have been relocated during the 12 calendar months for which certification has been made shall be reinspected and a new certificate posted before being put into operation.

20.C.03 When any boiler is being placed in service or restored to service after repairs to control circuits or safety devices, an operator shall be in constant attendance until controls have functioned through several cycles and equipment has been fully placed in service.

20.C.04 Fusible plugs shall be provided on all boilers, other than those of the water tube type.

a. Fusible plugs shall be replaced at inspections.

b. When necessary to renew fusible plugs between inspections, a written report covering the circumstances and giving make and heat number of plugs removed and inserted shall be forwarded to the responsible boiler inspector.

20.C.05 All boilers shall be equipped with water columns, gauge glass, and try cocks approved by a nationally-recognized testing laboratory.

a. Gauge glasses and water columns shall be guarded.

b. When shutoffs are used on the connections to a water column, they shall be approved locking or sealing type.

20.C.06 All boilers shall be equipped with blowoff cocks or valves approved by a nationally-recognized testing laboratory. The blowoff line shall be arranged so that leakage can be observed by the operator.

20.D COMPRESSED GAS CYLINDERS

20.D.01 Compressed gas cylinders shall be visually inspected in accordance with 49 CFR 171 through 179, CGA C6, and CGA C8.

20.D.02 All Government-owned cylinders shall be color coded and the gas contained identified by name in accordance with Military Standard (MIL-STD) 101B.

20.D.03 Storage.

a. Cylinders shall be stored in well-ventilated locations.

b. Cylinders containing the same gas shall be stored in a segregated group. Empty cylinders shall be labeled as empty and stored in the same manner.

c. Cylinders in storage shall be separated from flammable or combustible liquids and from easily ignitable materials (such as wood, paper, packaging materials, oil, and grease) by at least 40 ft (12.1 m) or by a fire resistive partition having at least a 1-hour rating.

d. Cylinders containing oxygen or oxidizing gases shall be separated from cylinders in storage containing fuel gases by at least 20 ft (6 m) or by a fire resistive partition having at least a 1-hour rating.

e. Areas containing hazardous gas in storage shall be appropriately placarded.

20.D.04 Smoking shall be prohibited wherever cylinders are stored, handled, or used.

20.D.05 Cylinders shall be protected from physical damage, electric current, and extremes of temperature. The temperature of cylinders shall not be allowed to exceed 130 °F (54.4 °C).

20.D.06 Cylinders containing oxygen and acetylene (or other fuel gas) shall not be taken into confined spaces.

20.D.07 Cylinder valves and valve caps.

a. Cylinder valves shall be closed when cylinders are in storage, in transit, not in use, or empty.

b. Cylinder valve caps shall be in place when cylinders are in storage, in transit, or whenever the regulator is not in place.

20.D.08 All compressed gas cylinders in service shall be secured in substantial fixed or portable racks or hand trucks.

20.D.09 Compressed gas cylinders transported by crane, hoist, or derrick shall be securely transported in cradles, nets, or skip pans, and never directly by slings, chains, or magnets.

20.D.10 Compressed gas cylinders shall be secured in an upright position at all times, except when being hoisted (except acetylene cylinders shall never be laid horizontal). Horizontal storage configurations approved for transportation are permitted for cylinders other than acetylene.

20.D.11 Valve wrench or wheel shall be in operating position when cylinder is in use.

a. Valves shall be opened slowly.

b. Quick closing valves on fuel gas cylinders shall not be opened more than 1-1/2 turns.

20.D.12 Cylinders shall be used only for their designed purpose of containing a specific compressed gas.

20.D.13 Cylinders shall be refilled only by qualified persons.

20.D.14 Cylinders shall be handled in a manner that will not weaken or damage the cylinder or valve.

20.D.15 Leaking cylinders shall be moved to an isolated location out of doors, the valve shall be cracked and the gas shall be allowed to escape slowly.

a. Personnel and all sources of ignition shall be kept away.

b. The cylinder shall be tagged "**DEFECTIVE**."

20.D.16 Cylinders containing different gases shall not be bled simultaneously in close proximity of each other.

20.D.17 Bleeding of cylinders containing toxic gases shall be accomplished only under the direct supervision of qualified personnel.

20.D.18 Oxygen cylinders and fittings shall be kept away from oil or grease.

a. Cylinders, cylinder valves, couplings, regulators, hose, and apparatus shall be kept free from oil or greasy substance and shall not be handled with oily hands or gloves.

b. Oxygen shall not be directed at oily surfaces, greasy cloths, or within a fuel oil or other storage tank or vessel.

20.D.19 Oxygen and fuel gas pressure regulators, including their related gauges, shall be in proper working order while in use.

SECTION 21

SAFE ACCESS AND FALL PROTECTION

21.A GENERAL

21.A.01 Safe access shall be provided to all work areas.

a. Where there is a horizontal or vertical break of 19 in (48.2 cm) or more in a route of access, a stairway, ladder, ramp, or personnel hoist shall be provided.

b. Means of access constructed of metal shall not be used for electrical work or where they might contact electrical conductors.

c. When a structure has only one means of access between levels, that means shall be kept clear to permit free passage of employees. If work is performed in an area that restricts free passage, a second means of access shall be provided.

d. When a structure has two or more means of access between levels, at least one means of access shall always be available for free passage of employees.

21.A.02 The AHA, approved by the GDA, for the activity in which means of access are to be used shall delineate the following:

a. The design, construction, and maintenance of the means of access, and

b. Erection and dismantling procedures, including provisions for providing fall protection during the erection or dismantling when the erection or dismantling involves work at heights that expose the workers to falls of 6 ft (1.8 m) or more.

21.A.03 Job-made means of access shall be designed to support, without failure, at least four times the maximum intended load.

21.A.04 Means of access shall not be loaded beyond the maximum intended load for which they were designed or beyond their manufactured rated capacity. When loaded, planking and decking shall not deflect more than 1/60 the span length.

21.A.05 The width of accessways shall be determined by the purpose for which they are built and shall be sufficient to provide safe passage for supplying materials and movement of personnel: except for ladders, in no case shall the width be less than 18 in (45.7 cm). ***> See 21.D.03.***

21.A.06 Load-carrying timber members shall be a minimum of 1,500 lb-ft/in^2 (10,342.1 kPa) (stress grade) construction grade lumber.

a. All dimensions are nominal sizes (except where rough sizes are noted) as provided by Voluntary Product Standard DOC PS 20, published by NIST of the US Department of Commerce. Where rough sizes are noted, only rough or undressed lumber of the size specified will satisfy minimum requirements.

b. Lumber shall be reasonably straight-grained and free of shakes, checks, splits, cross grains, unsound knots or knots in groups, decay and growth characteristics, or any other condition that will decrease the strength of the material.

21.A.07 Supporting members and foundations shall be of sufficient size and strength to safely distribute loading.

a. Supporting members shall be placed on a firm, smooth foundation that will prevent lateral displacement.

b. Unstable objects such as barrels, boxes, loose bricks, or concrete blocks shall not be used as supports.

21.A.08 Vertical members (e.g., poles, legs, or uprights) shall be plumb and securely braced to prevent swaying or displacement.

21.A.09 The design and construction or selection of planking and platform for means of access shall be based upon either the number of persons for which they are rated or the uniform load distribution to which they will be subjected, whichever is the more restrictive, in accordance with Tables 21-1 and 21-2:

TABLE 21-1

SELECTION CRITERIA FOR PLANKING AND PLATFORMS

RATED LOAD CAPACITY	DESIGNED AND CONSTRUCTED TO CARRY	LOAD PLACED
1 person	254 lb (115 kg)	at center of span
2 persons	254 lb (115 kg)	18 in (45.7 cm) to left of center of span and
	254 lb (115 kg)	18 in (45.7 cm) to right of center of span
3 persons	254 lb (115 kg)	at center of span and
	254 lb (115 kg)	18 in (45.7 cm) to left of center of span and
	254 lb (115 kg)	18 in (45.7 cm) to right of center of span

TABLE 21-2

MAXIMUM INTENDED LOAD

RATED LOAD CAPACITY	MAXIMUM INTENDED LOAD
light duty	25 lb/ft^2 (120 kg/m^2) applied uniformly over entire span area
medium duty	50 lb/ft^2 (240 kg/m^2) applied uniformly over entire span area
heavy duty	75 lb/ft^2 (360 kg/m^2) applied uniformly over entire span area

21.A.10 Planking.

a. All wood planking shall be selected for scaffold plank use as recognized by grading rules established by a recognized independent inspection agency for the species of wood used. The maximum permissible spans for 2-in x 10-in (5-cm x 25.4-cm) (nominal) or 2-in x 9-in (5-cm x 22.8-cm) (rough) solid sawn wood planks shall be as shown in Table 21-3:

TABLE 21-3

WOOD PLANK SELECTION

Maximum intended load lb/ft^2 (Pascal (Pa))	**Maximum permissible span - full thickness undressed lumber ft (m)**	**Maximum permissible span - nominal thickness undressed lumber ft (m)**
25.1 (1,200)	9.8 (3.0)	7.9 (2.4)
50.1 (2,400)	7.9 (2.4)	(1.8)
75.2 (3,600)	5.9 (1.8)	n/a

The maximum permissible span for 1 1/4 in x 9 in (3.1 cm x 22.8 cm) or wider wood plank of full thickness with a maximum intended load of 50 pounds per square foot (psf) shall be 4 ft (1.2 m).

b. Fabricated planks and platforms may be used in lieu of solid sawn wood planks. Maximum spans for such units shall be as recommended by the manufacturer based on the maximum intended load being calculated as specified in Table 21-1.

c. Planking shall be secured to prevent loosening, tipping, or displacement and supported or braced to prevent excessive spring or deflection. Intermediate beams shall be provided to prevent dislodgement of planks due to deflection. ***> See 21.A.04.***

d. Planking shall be laid with edges close together across the entire access surface. There will be no spaces through which personnel, equipment, or material could fall.

e. When planking is lapped, each plank shall lap its supports at least 12 in (30.4 cm).

f. Where the ends of planks abut each other to form a flush floor, the butt joint shall be at the centerline of a pole and abutted ends shall rest on separate bearers.

21.A.11 Accessways shall have overhead protection equal to 2-in (5-cm) solid planking whenever work is performed over them or if personnel are exposed to hazards from falling objects.

21.A.12 Nails shall be driven full length. Double-headed nails shall not be used on decks, guardrails, or handrails.

21.A.13 Accessways shall be inspected daily and maintained in a safe manner.

a. Accessways shall be kept free of ice, snow, grease, mud, debris or any other material or equipment that could obstruct passage, cause a tripping hazard, or render them unsafe in any other way.

b. Where accessways are slippery, abrasive material shall be used to assure safe footing.

c. All obstructions or projections into an accessway shall be removed or conspicuously marked. Obstructions or projections that are sharp or pointed, or that may cause lacerations, contusions, or abrasions shall be covered with protective material.

d. Accessways, including their accessories, that become damaged or weakened shall not be used until they are repaired or replaced.

21.A.14 When moving platforms to the next level, the old platform shall be left undisturbed until the new bearers have been set to receive the platform planks.

21.A.15 Fall protection.

a. Employees exposed to fall hazards shall be protected by standard guardrail, catch platforms, temporary floors, safety nets, personal fall protection devices, or the equivalent, in the following situations:

(1) On accessways (excluding ladders), work platforms, or walking/working surfaces from which they may fall 6 ft (1.8 m) or more;

(2) On accessways or work platforms over water, machinery, or dangerous operations;

(3) On runways from which they may fall 4 ft (1.2 m) or more; and

(4) On installing or removing sheet pile, h-piles, cofferdams, or other interlocking materials from which they may fall 6 ft (1.8 m) or more.

b. Every stairway and ladder way floor opening shall be guarded on all exposed sides, except the entrance opening, by securely anchored standard guardrail. Entrance openings shall be offset or provided with a gate to prevent anyone walking into the opening. ***> See Section 24.***

c. Platforms, except scaffolds, 4 ft to 6 ft (1.2 m to 1.8 m) in height, having a minimum horizontal dimension in either direction of less than 45 in (114.3 cm) shall have standard railing installed on all open sides and ends of the platform or the workers shall use personal fall protection.

21.A.16 Training.

a. Each employee who might be exposed to fall hazards shall be trained by a competent person qualified in the following areas, in the safe use of accessways and fall protection systems and the recognition of hazards related to their use, including:

(1) The nature of access and fall hazards in the work area;

(2) The correct procedures for constructing, erecting, maintaining, using, and dismantling accessways and fall protection systems;

(3) The maximum intended load-carrying capacities of accessways and fall protection systems; and

(4) All applicable requirements from this Section;

(5) The limitations on the use of mechanical equipment during the performance of roofing work on low-sloped roofs, the correct procedures for handling and storage of equipment and materials, and the erection of overhead protection; and

(6) Rescue equipment and procedures.

b. Retraining shall be provided as necessary for employees to maintain an understanding of these subjects.

c. The employer shall verify employee training by a written certification record that identifies the employee trained, the dates of the training, and the signature of the trainer.

21.B STANDARD GUARDRAILS AND HANDRAILS

21.B.01 A standard guardrail shall consist of toprails, midrails, and posts, and shall have a vertical height of 42 in +/- 3 in (106.6 cm +/- 7.6 cm) from the upper surface of the toprail to the

floor, platform, runway, or ramp level. Standard guardrail systems shall be provided with toe boards on all open sides/ends at locations where persons are required or permitted to pass or work under the elevated platform or where needed to prevent persons and material from falling from the elevated platform.

21.B.02 Guardrail systems shall be designed to meet the following requirements.

a. Capable of withstanding, without failure, a force of at least 200 lb (60.9 kg) applied within 2 in (5 cm) of the top edge, in any outward or downward direction, at any point along the top edge.

b. When the force described in a, above, is applied in a downward direction, the top edge of the guardrail shall not deflect more than 3 in (7.6 cm) nor to a height less than 39 in (99 cm) above the walking/working level.

c. Midrails, screens, mesh, intermediate vertical members, solid panels, and equivalent structural members shall be capable of withstanding, without failure, a force of at least 150 lb (68 kg) applied in any downward or outward direction at any point along the midrail or other member.

d. Toe boards shall withstand without failure a force of 50 lbs (23 kg) applied in any outward or downward direction at any point along the toe board.

21.B.03 Dimensions of standard guardrail components. The following guidelines may be used in designing guardrail systems to satisfy the requirements specified in 21.B.02. The employer is still responsible for designing a complete system and assembling these components in accordance with 21.B.02.

a. For wood railings:

(1) Toprails shall be of at least 2-in x 4-in (5-cm x 10.1-cm) lumber,

(2) Midrails shall be at least 1-in x 6-in (2.5-cm x 15.2-cm) lumber, and

(3) Posts shall be at least 2-in x 4-in (5-cm x 10.1-cm) lumber spaced not to exceed 8 ft (2.4 m) on centers.

b. For pipe railings:

(1) Toprails and midrails shall be at least 1.5 in (3.8 cm) nominal diameter (schedule 40 pipe), and

(2) Posts shall be at least 1.5 in (3.8 cm) nominal diameter (schedule 80 steel pipe) spaced not more than 8 ft (2.4 m) on centers.

c. For structural steel railings:

(1) Toprails and midrails shall be at least 2-in x 2-in x 3/8-in (5-cm x 5-cm x 0.9-cm) angles, and

(2) Posts shall be at least 2-in x 2-in x 3/8-in (5-cm x 5-cm x 0.9-cm) angles spaced not more than 8 ft (2.4 m) on centers.

21.B.04 Guardrail systems shall be so surfaced as to prevent injury to an employee from punctures or lacerations and to prevent snagging of clothing.

21.B.05 Toprails and midrails.

a. Midrails shall be halfway between the toprails and the floor, platform, runway, or ramp.

b. The ends of the toprails and midrails shall not overhang the terminal posts except where such overhang does not create a projection hazard.

c. Synthetic or natural fiber ropes shall not be used as toprails or midrails. Wire rope may be used as toprails or midrails if

tension is maintained to provide not more than 3-in (7.6-cm) deflection, in any direction from the center line, under a 200-lb (90.7-kg) load, if support posts are located not more than 8 ft (2.4 m) apart, and if the wire rope is flagged at not more than 6 ft (1.8 m) intervals with high-visibility material.

21.B.06 Toe boards.

a. Toe boards shall be 1-in x 4-in (2.5-cm x 10.1-cm) (minimum 4-in (10.1-cm) (nominal) vertically) lumber or the equivalent.

b. Toe boards shall be securely fastened in place and have not more than 1/4 in (0.6 cm) clearance above floor level.

c. Toe boards shall be made of any substantial material, either solid or with openings not greater than 1 in (2.5 cm) in greatest dimension.

d. Where material is piled to such a height that a standard toe board does not provide protection, paneling or screening from floor to toprail or midrail shall be provided.

21.B.07 Guardrails receiving heavy stresses from employees trucking or handling materials shall be provided additional strength by using heavier stock, closer spacing of posts, bracing, or by other means.

21.B.08 Handrails.

a. A standard handrail shall be of construction similar to a standard guardrail except that it is mounted on a wall or partition and does not include a midrail.

b. Handrails shall have smooth surfaces along the top and both sides.

c. Handrails shall have an adequate handhold for anyone grasping it to avoid falling.

d. Ends of handrails shall be constructed so as not to constitute a projection hazard.

e. The height of handrails shall be not more than 34 in (86.3 cm) nor less than 30 in (76.2 cm) from upper surface of handrail to surface of tread, in line with face of riser or to surface of ramp.

f. The height of stair rails shall be not more than 34 in (86.3 cm) nor less than 30 in (76.2 cm) from the upper surface of the top rail to surface of tread in line with face of riser at forward edge of tread.

21.B.09 All handrails and railings shall be provided with a clearance of approximately 3 in (7.6 cm) between the handrail or railing and any other object.

21.C PERSONAL FALL PROTECTION SYSTEMS AND SAFETY NETS

21.C.01 Personal fall protection devices (personal fall arrest systems and positioning devices), independently attached or attended, or safety nets shall be used when performing such work as the following when the requirements of 22.A.04a cannot be met.

a. Work in hoppers, bins, silos, tanks, or other confined spaces;

b. Work on hazardous slopes, structural steel, or poles;

c. Erection or dismantling of safety nets;

d. Tying reinforcing bars;

e. Work from boatswain's chairs, swinging scaffolds, or other unguarded locations at elevations greater than 6 ft (1.8 m);

f. Work on skips and platforms used in shafts by crews when the skip or cage does not block the opening to within 1 ft (0.3 m) of the sides of the shaft, unless cages are provided.

g. Leading edge work and roofs.

21.C.02 Selection of personal fall protective equipment shall be based on the type of work; the work environment; the weight, size, and shape of the user; the type and position of anchorage; and the length of the lanyard. ***> See Section 05.F.***

21.C.03 Personal fall arrest systems, when stopping a fall, shall:

a. Limit maximum arresting force on an employee to 1,800 lb (816.4 kg) when used with a full-body harness;

b. Be rigged such that an employee can neither free fall more than 6 ft (1.8 m) nor contact any lower level or other physical hazard;

c. Bring an employee to a complete stop and limit maximum deceleration distance an employee travels to 3.5 ft (1 m); and

d. Have sufficient strength to withstand twice the potential impact energy of an employee free falling a distance of 6 ft (1.8 m) or the free fall distance permitted by the system, whichever is less.

21.C.04 Positioning device systems shall:

a. Be rigged such that an employee cannot free fall more than 2 ft (0.6 m); and

b. Be secured to an anchorage capable of supporting at least twice the potential impact load of an employee's fall or 3,000 lb (1,360.7 kg), whichever is greater.

c. When using body belt, the maximum arresting force on an employee shall not exceed 900 lb (409 kg).

21.C.05 When necessary, body belts and harnesses shall have two lanyards to ensure that a person is tied-off with at least one lanyard at all times, or where the lanyard is the primary support for operations such as rock-scaling and high-wall concrete finishing.

21.C.06 The manufacturer's recommendations shall be followed in the fitting, adjustment, use, inspection, testing, replacement, and care of personal fall protection equipment. Before an employee uses personal fall protection equipment, he/she shall receive instruction in these recommendations and the potential fall hazards of the activity.

21.C.07 Personal fall protection equipment shall be inspected by the worker prior to each use to determine that is in a safe working condition. A competent person shall inspect the equipment at least once semi-annually and whenever subjected to severe use: defective equipment shall be immediately replaced.

21.C.08 Personal fall protection equipment shall be used only for employee safeguarding. Any such equipment subjected to impact loading shall be immediately removed from service, and shall not be used again for employee safeguarding.

21.C.09 Lifelines.

a. When vertical lifelines are used, each employee shall be attached to a separate lifeline.

b. On suspended scaffolds or similar work platforms with horizontal lifelines that may become vertical lifelines, the devices used to connect to a horizontal lifeline shall be capable of locking in both directions on the lifeline.

c. Horizontal lifelines shall be designed, installed, and used under the supervision of a qualified person as part of a complete fall arrest system that maintains a safety factor of at least two.

Rope grab shall not be used or connected to the horizontal life line.

d. Lifelines used on rock-scaling operations or in areas where the line may be subject to cutting or abrasion shall be specifically designed and constructed for such applications.

21.C.10 Anchorage and attachment.

a. Anchorages used for attachment of personal fall arrest equipment shall be independent of any anchorage used to support or suspend platforms and shall be capable of supporting at least 5,000 lb (2,267.9 kg) per employee attached.

b. The attachment point for body belts in a positioning device system shall be located on the sides or on the front; the attachment point for body harnesses shall be located in the center of the wearer's back near shoulder level, or above the wearer's head.

c. Personal fall arrest systems shall not be attached to guardrail systems nor shall they be attached to hoists.

d. When a personal fall arrest system is used at hoist areas, it shall be rigged to allow the movement of the employee only as far as the edge of the walking/working surface.

21.C.11 Installation of safety nets.

a. Safety nets shall be installed as close under the work surfaces as practical but in no case more than 25 ft (7.6 m) below such work surface. Nets shall be hung with sufficient clearance to prevent contact with the surfaces or structures below. Such clearance shall be determined by impact load testing. When nets are used on bridges, the potential fall area from the walking/working surface to the net shall be unobstructed.

b. Nets shall extend outward from the outermost projection of the work surface as shown in Table 21-4:

TABLE 21-4

SAFETY NET DISTANCES

VERTICAL DISTANCE FROM WORKING LEVEL TO HORIZONTAL PLANE OF NET	MINIMUM REQUIRED HORIZONTAL DISTANCE OF OUTER EDGE OF NET FROM EDGE OF WORKING SURFACE
Up to 4.9 ft (up to 1.5 m)	7.9 ft (2.4 m)
4.9 ft up to 9.8 ft (1.5 m up to 3.0 m)	9.8 ft (3.0 m)
more than 9.8 ft (more than 3.0 m)	13.1 ft (4 m)

c. Operations requiring safety net protection shall not be undertaken until the net(s) is in place and has been tested without failure.

(1) Safety nets and safety net installations shall be tested in the suspended position immediately after installation and before being used as a fall protection system, whenever relocated, after major repair, and when left at one location, at not more than 6 month intervals.

(2) The test shall consist of dropping into the net a 400 lb (180 kg) bag of sand, not more than 30 in +/- 2 in (76.2 cm +/- 5 cm) in diameter, at least 42 in (106.6 cm) above the highest working/walking surface at which employees are exposed to fall hazards.

21.C.12 Debris nets.

a. When used with personnel safety nets, debris nets shall be secured on top of the personnel safety net but shall not compromise the design, construction, or performance of the personnel nets.

b. A competent person shall determine, and document, the size, weight, and height-of-fall of anticipated debris. The debris netting shall have a mesh of the size and strength sufficient to contain the expected debris without penetration when properly supported.

21.C.13 Debris shall be removed from safety and debris nets. Nets and debris shall be protected from sparks and hot slag resulting from welding and cutting operations.

21.C.14 Inspection of safety and debris nets.

a. Safety and debris nets shall be inspected by a competent person in accordance with the manufacturer's recommendations.

b. Inspections shall be conducted after installation, at least weekly thereafter, and following any alteration, repair, or any occurrence that could affect the integrity of the net system. Inspections shall be documented.

c. Defective nets shall not be used; defective components shall be removed from service

21.C.15 If any welding or cutting operations occur above the nets, weld protection shall be provided. The frequency of inspections shall be increased in proportion to the potential for damage to the nets.

21.C.16 Materials, scrap pieces, equipment, and tools that have fallen into the safety net shall be removed as soon as possible from the net and at least before the next work shift.

21.D LADDERS

21.D.01 The construction, installation, and use of ladders shall conform to ANSI A14.1, ANSI A14.2, ANSI A14.3, and ANSI A14.4, as applicable.

21.D.02 Length.

a. All portable ladders shall be of sufficient length and shall be placed so that workers will not stretch or assume a hazardous position.

b. Portable ladders used as temporary access shall extend at least 3 ft (0.9 m) above the upper landing surface.

(1) When a 3-ft (0.9-m) extension is not possible, a grasping device (such as a grab rail) shall be provided to assist employees in mounting and dismounting the ladder.

(2) In no case shall the length of the ladder be such that ladder deflection under a load would, by itself, cause the ladder to slip from its support.

c. The length of portable stepladders shall not exceed 20 ft (6 m).

d. When splicing is required to obtain a given length of side rail, the resulting side rail must be at least equivalent in strength to a one-piece side rail made of the same material.

e. Fixed ladders shall extend 42 in (106.6 cm) above the top of the access level or landing platform served by the ladder.

21.D.03 Width.

a. The minimum clear distance between the sides of individual-rung/step ladders shall be 16 in (40.6 cm).

b. The minimum clear distance between side rails for all portable ladders shall be 12 in (30.4 cm).

21.D.04 Spacing of rungs, cleats, and steps.

a. On portable ladders, shall be uniformly spaced at 12 in (30.4 cm) on center.

b. On step stools, spacing shall be not less than 8 in (20.3 cm), nor more than 12 in (30.4 cm), apart as measured from their centerlines.

c. On extension trestle ladders, spacing on the base section shall be not less than 8 in (20.3 cm), nor more than 18 in (45.7 cm), apart as measured from their centerlines. On the extension section spacing shall not be less than 6 in (15.2 cm), nor more than 12 in (30.4 cm), apart as measured from their centerlines.

21.D.05 Ladders shall be surfaced so as to prevent injury to an employee from punctures or lacerations and to prevent snagging of clothing.

21.D.06 Wood ladders shall not be coated with any opaque covering, except for identification or warning labels that may be placed on only one face of a side rail.

21.D.07 A metal spreader bar or locking device shall be provided on each stepladder to hold the front and back sections in an open position.

21.D.08 Set-up.

a. Ladders shall not be placed in passageways, doorways, drives, or any locations where they may be displaced by any other work unless protected by barricades or guards.

b. Portable ladders shall be used at such a pitch that the horizontal distance from the top support to the foot of the ladder will not be greater than one-fourth the vertical distance between these points.

c. Wood job-made ladders with spliced rails shall be used at an angle such that the horizontal distance is one-eighth the length of the ladder.

d. Ladders shall be secured by top, bottom, and intermediate fastenings as required to hold them rigidly in place and to support the loads that will be imposed upon them.

e. The steps or rungs of all ladders shall be set to provide at least 7-in (17.7-cm) toe space from the inside edge of the rung to the nearest interference.

f. The top of a non-self supporting ladder shall be placed with the two rails supported equally unless it is equipped with a single support attachment.

21.D.09 Use.

a. No work requiring lifting of heavy materials or substantial exertion shall be done from ladders.

b. When ladders are the only means of access to or from a working area for 25 or more employees, or when a ladder is to serve simultaneous two-way traffic, double-cleated ladders shall be used.

c. Portable ladders shall have slip-resistant feet.

d. Ladders shall not be moved, shifted, or extended while occupied.

e. The top or top step of a stepladder shall not be used as a step unless it has been designed to be so used by the manufacturer.

f. Ladders shall be inspected for visible defects on a daily basis and after any occurrence that could affect their safe use.

g. Broken or damaged ladders shall be immediately tagged "**DO NOT USE**," or similar wording, and withdrawn from service until restored to a condition meeting their original design.

h. Ladders shall be restricted to their intended use.

i. Ladders shall not be climbed by more than one person at a time unless it is designed to be climbed by more than one person.

j. Keep loose tools off the steps and top platform.

k. Ensure latches are in place before climbing an extension ladder.

21.D.10 Fixed ladders shall comply with the requirements in Appendix J.

21.D.11 Single-rail ladders shall not be used. Three-legged ladders may be used for specific tasks if approved by the GDA.

21.E STAIRWAYS

21.E.01 On all structures 20 ft (6 m) or more in height, stairways shall be provided during construction.

a. Where permanent stairways are not installed concurrently with the construction of each floor, a temporary stairway shall be provided to the work level.

b. Alternatives to the use of stairways shall be addressed in the AHA and shall be accepted by the GDA.

21.E.02 Design.

a. Temporary stairways shall have landings not less than 30 in (76.2 cm) in the direction of travel and extend at least 22 in (55.8 cm) in width at every 12 ft (3.6 m) or less of vertical rise.

b. Stairs shall be installed between 30° and 50° from horizontal.

c. Risers shall be of uniform height and treads of uniform width.

21.E.03 Metal pan landings and metal pan treads, when used, shall be secured in place and filled with concrete, wood, or other material at least to the top of each pan.

21.E.04 Wooden treads shall be nailed in place.

21.E.05 Every flight of stairs with four or more risers or rising more than 30 in (76.2 cm) shall have standard stair railings (defined below) or standard handrails. ***> See 21.B for standard handrail requirements.***

a. On stairways less than 44 in (111.7 cm) wide having both sides enclosed, at least one standard handrail shall be installed, preferably on the right side descending.

b. On stairways less than 44 in (111.7 cm) wide having one side open, at least one standard stair railing shall be installed on the open side.

c. On stairways less than 44 in (111.7 cm) wide having both sides open, one standard stair railing shall be installed on each side.

d. On stairways more than 44 in (111.7 cm) wide, but less than 88 in (223.5 cm) wide, one standard handrail shall be installed on each enclosed side, and one standard stair railing installed on each open side.

e. On stairways 88 in (223.5 cm) or more wide, one standard handrail shall be installed on each enclosed side, one standard stair railing on each exposed side, and a standard handrail in the middle of the stairway.

21.E.06 Standard stair railing shall be installed around all stairwells.

21.E.07 Standard stair railing.

a. A stair railing shall have a vertical height not less than 36 in (91.4 cm) from the upper surface of the stair rail system to the surface of the tread, in line with the face of the riser at the forward edge of the tread.

b. Midrails, screens, mesh, intermediate vertical members, or equivalent intermediate structural members shall be provided between the toprail and the stairway steps.

(1) Midrails shall be located at a height midway between the top edge of the stairway system and the stairway steps.

(2) Screens or mesh, when used, shall extend from the toprail to the stairway steps and along the entire opening between rail supports.

(3) Intermediate vertical members, when used, shall be not more than 19 in (48.2 cm) apart.

(4) Other structural members, when used, shall be installed in such a manner that there are no openings in the stair rail system that are more than 19 in (48.2 cm) wide.

21.E.08 Doors or gates opening onto a stairway shall have a platform; swinging of the door shall not reduce the width of the platform to less than 20 in (50.8 cm).

21.E.09 Spiral stairways shall not be permitted except for special limited usage and secondary access where it is not practical to provide a conventional stairway.

21.F RAMPS, RUNWAYS, AND TRESTLES

21.F.01 Inclined ramps, runways, and platforms shall be as flat as conditions will permit. Where the incline exceeds 1-on-5 (1 ft (0.3 m) in a 5-ft (1.5-m) run), traverse cleats shall be applied to the working surface.

21.F.02 Vehicle ramps, trestles, and bridges on which foot traffic is permitted shall be provided with a walkway and guardrail outside the roadway. The roadway structures shall be provided with wheel guards, fender logs, or curbs not less than 8 in (20.3 cm) high placed parallel and secured to the sides of the runway.

21.F.03 All locomotive and gantry crane trestles that extend into or pass over a work area, except where a crane is hoisting between rails, shall be decked solid with not less than 2-in (5-cm) planking, or the equivalent, for the full length of the extension into the working area.

21.F.04 When used in lieu of steps, ramps shall be provided with cleats to ensure safe access.

21.G PERSONNEL HOISTS AND ELEVATORS

21.G.01 Standards for design, construction, installation or erection, operation, inspection, testing, and maintenance.

a. Design, construction, installation or erection, operation, inspection, testing, and maintenance of personnel hoists and elevators shall be in accordance with the manufacturer's recommendations and the applicable ANSI standard.

(1) Track-guided personnel hoist systems and structures that are temporarily installed inside or outside buildings during construction, alteration, or demolition shall be in compliance with ANSI A10.4;

(2) Rope-guided personnel hoist systems that are temporarily erected during construction, alteration, or demolition shall be in compliance with ANSI A10.22;

(3) Non-guided personnel hoist systems that are temporarily erected during construction, alteration, or demolition shall be in compliance with ANSI A10.8 and ANSI A10.22. (An air-tugger hoist, or the equivalent meeting the criteria of 4.2, ANSI A10.22, may by substituted for a base mounted hoist.)

(4) Elevators operating in permanent hoistways on the permanent guide rails for handling personnel during construction shall be in compliance with ANSI/ASME A17.1

b. A copy of the manufacturer's manual covering construction, installation or erection, operation, inspection, testing, and maintenance and a copy of the applicable ANSI standard shall be available on site.

c. Personnel hoists and elevators shall comply with applicable requirements from Section 16 of this manual.

21.G.02 Personnel hoists used in bridge tower construction shall be approved by a registered engineer and erected under the supervision of a registered engineer competent in this field.

SECTION 22

WORK PLATFORMS

22.A GENERAL

22.A.01 Manufactured work platforms shall be erected, used, inspected, tested, maintained, and repaired in accordance with ANSI A10.8 and the manufacturer's recommendations as outlined in the operating manual or in accordance with guidance from the Scaffolding, Shoring, and Forming Institute. A copy of the manufacturer's recommendations (operating manual) or guidance from the Scaffolding, Shoring, and Forming Institute shall be available at the work site.

22.A.02 Work platforms shall comply with appropriate access and fall protection requirements of Section 21.

a. All requirements of 21.A shall be applied to work platforms and means of access.

b. Standard railing and handrails for work platforms shall be in compliance with the requirements of Section 21 and personal fall protection devices and safety nets shall be in compliance with the requirements of 21.C.

c. Ladders used as work platforms shall be in compliance with the requirements of 21.D.

22.A.03 Prior to commencing any activity that requires work in elevated areas, all provisions for access and fall protection shall be delineated in the AHA, accepted by the GDA, for the activity.

22.A.04 The following hierarchy and prohibitions shall be followed in selecting appropriate work platforms.

a. Scaffolds, platforms, or temporary floors shall be provided for all work except that which can be done safely from the ground or similar footing.

b. Ladders may be used as work platforms only when use of small hand tools or handling of light material is involved.

c. Ladder jacks, lean-to, and prop-scaffolds are prohibited.

d. Emergency descent devices shall not be used as working platforms.

22.A.05 Erection, moving, dismantling, or altering of work platforms shall be under the supervision of a competent person.

22.A.06 Work platforms shall not be erected or used in the immediate vicinity of power lines or electrical conductors until such are insulated, de-energized, or otherwise rendered safe against accidental contact. ***> See 11.E.***

22.A.07 Where persons are required to work or pass under a working platform, a screen (consisting of No. 18 gauge US Standard wire 0.5-in (1.2-cm) mesh or the equivalent) shall be provided between the toe board and the guardrail and extending over the entire opening.

22.B SCAFFOLDS - GENERAL

22.B.01 Capacities.

a. Scaffolds and their components shall meet the requirements contained in ANSI A10.8 and be capable of supporting without failure at least 4 times the maximum anticipated load.

b. Scaffold system components that are subjected to a bending moment (such as outrigger beams with suspended scaffold and counterweights) shall be capable of providing a resisting moment of at least four times the tipping moment.

22.B.02 Design.

a. The dimensions of the members and materials used in the construction of various working platforms or scaffolds shall conform to the sizes shown in the ANSI A10.8 tables.

b. Factory-fabricated scaffolds and components shall be designed and fabricated in accordance with the applicable ANSI standard. When there is a conflict between the ANSI standard and this manual concerning the design or fabrication of factory-fabricated scaffolds, the ANSI standard shall prevail.

22.B.03 Scaffolds shall be plumb and level.

22.B.04 Scaffolds (other than suspended scaffolds) shall bear on base plates upon mudsills or other adequate foundation.

22.B.05 Working levels of work platforms shall be fully planked or decked.

22.B.06 Planking.

a. All planking of platforms shall be either overlapped (minimum 12 in (30.4 cm) or secured from movement.

b. Scaffold planks shall extend over their end supports not less than 6 in (15.2 cm) (unless the planking is manufactured with restraining hooks or equivalent means) nor more than 12 in (30.4 cm).

c. Planking on scaffolds shall extend from the toe board to not more than 14 in (35.5 cm) from the face of the building or structure unless standard guardrails are installed or personal fall protection systems are used. The maximum distance for outrigger scaffolds shall be 3 in (7.6 cm).

d. Planking shall be supported or braced to prevent excessive spring or deflection and secured and supported to prevent loosening, tipping, or displacement.

e. When a scaffold materially changes its direction, the platform planks shall be laid to prevent tipping.

(1) The planks that meet the corner bearer at an angle shall be laid first, and extend over the diagonally placed bearer far enough to have a good safe bearing but not far enough to involve any danger from tipping, and

(2) The planking running in the opposite direction at an angle shall be laid so as to extend over and rest on the first layer of planking.

22.B.07 Work platforms shall be securely fastened to the scaffold.

22.B.08 Access.

a. An access ladder or equivalent safe access shall be provided.

b. Where a built-in ladder is part of a scaffold system, it shall conform to the requirements for ladders.

c. Climbing of braces shall be prohibited.

22.B.09 When the scaffold height exceeds four times the minimum scaffold base dimension (and including the width added by outriggers, if used), the scaffold shall be secured to the wall or structure.

a. The first vertical and horizontal tie shall be placed at this point.

b. Vertical ties shall be repeated at intervals not greater than 26 ft (7.9 m) with the top tie placed no lower than four times the base dimension from the top of the scaffold.

c. Horizontal ties shall be placed at each end and at intervals not greater than 30 ft (9.1 m).

22.B.10 The use of brackets on scaffolds shall be prohibited unless the tipping effect is controlled

22.B.11 Use of the following types of scaffolding are permitted if they are designed and constructed in accordance with ANSI A10.8:

a. Outrigger scaffolds,

b. Needle beam scaffolds,

c. Interior hung scaffolds,

d. Bricklayer's square scaffolds,

e. Float/ship scaffolds,

f. Boatswain's scaffolds,

g. Window jack scaffolds, and

h. Carpenter's bracket scaffolds.

22.C METAL SCAFFOLDS AND TOWERS

22.C.01 Scaffold components made of dissimilar metals shall not be used together unless a competent person has determined that galvanic action will not reduce the strength of any component to a level below that required by 22.B.01.

22.C.02 The sections of metal scaffolds shall be securely connected and all braces shall be securely fastened.

22.C.03 A ladder or stairway shall be provided for access and shall be affixed or built into all metal scaffolds and so located that, when in use, it will not have a tendency to tip the scaffold.

22.C.04 Tube and coupler scaffolds.

a. Tube and coupler scaffolds shall have posts, runners, and bracing of nominal 2-in (5-cm) (outside diameter) steel tubing or pipe: other structural metals, when used, must be designed to carry an equivalent load. The size of bearers (outside diameter) and the spacing of posts shall meet the requirements contained in ANSI A10.8.

b. Tube and coupler scaffolds shall be limited in heights and working levels to those permitted in ANSI A10.8. Drawings and specifications for tube and coupler scaffolds that exceed the limitations in ANSI A10.8 shall be designed by a registered engineer.

c. All tube and coupler scaffolds shall be constructed to support four times the maximum intended loads, as set forth by ANSI A10.8 or as specified by a professional structural engineer.

d. Runners shall be erected along the length of the scaffold and shall be located on both the inside and the outside posts at even heights.

(1) When tube and coupler guardrails and midrails are used on outside posts, they may be used in lieu of outside runners. If guardrail systems are removed to other levels, extra runners shall be installed to compensate.

(2) Runners shall be interlocked to form continuous lengths and coupled to each post.

(3) The bottom runners shall be located as close to the base as possible.

(4) Runners shall be placed not more than 6 ft - 6 in (1.9 m) on center.

e. Bearers.

(1) Bearers shall be installed transversely between posts.

(2) When coupled to the post, the inboard coupler shall bear directly on the runner coupler. When coupled to the runners, the couplers shall be kept as close to the post as possible.

(3) Bearers shall extend beyond the posts and runners and shall provide full contact with the coupler.

f. Bracing across the width of the scaffold shall be installed at the ends of the scaffold at least every fourth level vertically and repeated every third set of posts horizontally.

(1) Such bracing shall extend diagonally from the outer post or runner at this level upward to the inner post or runner at the next level.

(2) Building ties shall be installed adjacent to bracing.

g. Longitudinal diagonal bracing across the inner and outer rows of poles shall be installed at approximately a 45° angle in both directions from the base of the end post upward to the extreme top of the scaffold.

(1) Where the longitudinal length of the scaffold permits, such bracing shall be repeated beginning at every fifth post.

(2) On scaffolds where the length is shorter than the height the longitudinal bracing shall extend diagonally from the base of the end posts upward to the opposite end posts and then in alternating directions until reaching the top of the scaffold.

(3) Where conditions preclude the attachment of bracing to the posts, it may be attached to the runners.

22.C.05 Metal frame scaffolds.

a. Spacing of tubular welded panels or frames shall be consistent with the loads imposed.

b. Scaffolds shall be properly braced by cross, horizontal, or diagonal braces (or combination of these) to secure vertical members together laterally, and the cross braces shall be of such length as will automatically square and align vertical members so that the erected scaffold is always plumb, square, and rigid. All brace connections shall be made secure.

c. Scaffold legs shall be set on adjustable bases or plain bases placed on mudsills or other foundations adequate to support the maximum rated loads.

d. Frames shall be placed one on top the other with coupling or stacking pins to provide vertical alignment of the legs.

e. Where uplift may occur, panels shall be locked together vertically by pins or other equivalent suitable means.

f. Drawings and specifications for all frame scaffolds over 125 ft (38.1 m) in height above the base plates shall be designed by a registered engineer.

22.C.06 Manually propelled mobile scaffolds.

a. All wheels and casters on rolling scaffolds shall have a positive locking device, securely fastened to the scaffold, to prevent accidental movement.

b. Casters or wheels shall be locked when scaffold is in use.

c. The force necessary to move the mobile scaffold shall be applied as close to the base as practical and provision shall be made to stabilize the tower during movement from one location to another.

d. Rolling scaffolds shall be used only on firm, level, clean surfaces.

e. Free-standing mobile scaffold working platform heights shall not exceed three times the smallest base dimension.

f. No person shall be allowed to ride on manually propelled scaffolds unless all of the following conditions exist:

(1) The ground surface is within 3° of level and free from pits, holes, or obstructions;

(2) The minimum dimension of the scaffold base (when ready for rolling) is at least one-half of the height and outriggers, if used, are installed on both sides of staging;

(3) The wheels are equipped with rubber or similar resilient tires; and

(4) All tools and materials are secured or removed from the platform before the scaffold is moved.

22.D SCAFFOLDS - WOOD POLE

22.D.01 All wood scaffolds 60 ft (18.2 m) or less in height shall be constructed in accordance with Table 22-1; wood scaffolds over 60 ft (18.2 m) high shall be designed by a licensed professional engineer and constructed in accordance with such design.

TABLE 22-1

WOOD POLE SCAFFOLD HEIGHT AND LEVEL LIMITS
Minimum nominal size and maximum spacing of members of single pole scaffolds

	Light duty		Medium duty	Heavy Duty
Maximum height of scaffold	20 ft (6.1m)	60 ft (18.2 m)	60 ft (18.2 m)	60 ft (18.2 m)
Maximum uniformly distributed load	25 psf	25 psf	50 psf	75 psf
Poles or uprights	2 in x 4 in (5.1 cm x 10.1 cm)	4 in x 4 in (10.1 cm x 10.1 cm)	4 in x 4 in (10.1 cm x 10.1 cm)	4 in x 4 in (10.1 cm x 10.1 cm)
Pole spacing, longitudinal	6 ft (1.8 m)	10 ft (3.0 m)	8 ft (2.4 m)	6 ft (1.8 m)
Maximum width of scaffold	5 ft (1.5 m)	5 ft (1.5 m)	5 ft (1.5 m)	5 ft (1.5 m)
Bearers or putlogs	2 in x 4 in (5.1 cm x 10.1 cm) + 2 in x 6 in (5.1 cm x 15.2 cm) (rough) or 3 in x 4 in (7.6 cm x 10.1 cm) (rough)++	2 in x 4 in (5.1 cm x 10.1 cm) + 2 in x 6 in (5.1 cm x 15.2 cm) (rough) or 3 in x 4 in (7.6 cm x 10.1 cm) (rough)++	2 in x 9 in (5.1 cm x 22.8 cm) (rough) or 3 in x 4 in (7.6 cm x 10.1 cm) (rough)	2 in x 9 in (5.1 cm x 22.8 cm) (rough) or 3 in x 5 in (7.6 cm x 12.7 cm) (rough)

All members are used on edge
+ to 3 ft (.9 m) width
++ to 5 ft (1.5 m) width

TABLE 22-1 (CONTINUED)

WOOD POLE SCAFFOLD HEIGHT AND LEVEL LIMITS
Minimum nominal size and maximum spacing of members of single pole scaffolds

	Light duty		Medium duty	Heavy Duty
Spacing of bearers or putlogs			8 ft (2.4 m)	6 ft (1.8 m)
Ledgers	1 in x 4 in (2.5 cm x 10.1 cm)	1-1/4 in x 9 in (3.1 cm x 22.8 cm)	2 in x 9 in (5 cm x 22.8 cm) (rough)	2 in x 9 in (5 cm x 22.8 cm) (rough)
Vertical spacing of horizontal members	7 ft (2.1 m)	7 ft (2.1 m)	9 ft (2.7 m)	6 ft 6 in (1.9 m)
Bracing, horizontal	1 in x 4 in (2.5 cm x 10.1 cm)	1 in x 4 in (2.5 cm x 10.1 cm)	1 in x 6 in (2.5 cm x 15.2 cm) or 1-1/4 in x 4 in (3.1 cm x 10.1 cm)	2 in x 4 in (5 cm x 10.1 cm)
Bracing, diagonal	1 in x 4 in (2.5 cm x 10.1 cm)	1 in x 4 in (2.5 cm x 10.1 cm)	1 in x 4 in (2.5 cm x 10.1 cm)	2 in x 4 in (5 cm x 10.1 cm)
Tie-ins	1 in x 4 in (2.5 cm x 10.1 cm)	1 in x 4 in (2.5 cm x 10.1 cm)	1 in x 4 in (2.5 cm x 10.1 cm)	1 in x 4 in (2.5 cm x 10.1 cm)

All members are used on edge
+ to 3 ft (.9 m) width
++ to 5 ft (1.5 m) width

TABLE 22-1 (CONTINUED)

WOOD POLE SCAFFOLD HEIGHT AND LEVEL LIMITS
Minimum Nominal Size and Maximum Spacing of Members of Independent Pole Scaffolds

	Light duty		Medium duty	Heavy Duty
Maximum height of scaffold	20 ft (6 m)	60 ft (18.2 m)	60 ft (18.2 m)	60 ft (18.2 m)
Maximum uniformly distributed load	25 psf	25 psf	50 psf	75 psf
Poles or uprights	2 in x 4 in (5 cm x 10.1 cm)	4 in x 4 in (10.1 cm x 10.1 cm)	4 in x 4 in (10.1 cm x 10.1 cm)	4 in x 4 in (10.1 cm x 10.1 cm)
Pole spacing, longitudinal	6 ft (1.8 m)	10 ft (3 m)	8 ft (2.4 m)	6 ft (1.8 m)
Maximum width of scaffold	6 ft (1.8 m)	10 ft (3 m)	6 ft (1.8 m)	6 ft (1.8 m)
Bearers	2 in x 4 in (5 cm x 10.1 cm) + 2 in x 6 in (5 cm x 15.2 cm) (rough) or 3 in x 4 in (7.6 cm x 10.1 cm) (rough)++	2 in x 4 in (5 cm x 10.1 cm) + 2 in x 6 in (5 cm x 15.2 cm) (rough) or 3 in x 4 in (7.6 cm x 10.1 cm) (rough)++	2 in x 9 in (5 cm x 22.8 cm) (rough) or 2 in x 10 in (5 cm x 25.4 cm) (rough)	2 in x 9 in (5 cm x 22.8 cm) (rough)
Spacing of bearers or putlogs			8 ft (2.4 m)	6 ft (1.8 m)

All members are used on edge
+ to 3 ft (.9 m) span.
++ to 10 ft (3 m) span
* these data are based on one working level and two additional planked levels

TABLE 22-1 (CONTINUED)

WOOD POLE SCAFFOLD HEIGHT AND LEVEL LIMITS
Minimum Nominal Size and Maximum Spacing of Members of Independent Pole Scaffolds

	Light duty		Medium duty	Heavy Duty
Ledgers	1 in x 4 in (2.5 cm x 10.1 cm)	1-1/4 in x 9 in (3.1 cm x 22.8 cm)	2 in x 9 in (5 cm x 22.8 cm) (rough)	2 in x 9 in (5 cm x 22.8 cm) (rough)
Vertical spacing of horizontal members	7 ft (2.1 m)	7 ft (2.1 m)	6 ft (1.8 m)	4 ft 6 in (1.2m)
Bracing, horizontal	1 in x 4 in (2.5 cm x 10.1 cm)	1 in x 4 in (2.5 cm x 10.1 cm)	1 in x 6 in (2.5 cm x 15.2 cm) or 1 1/4 in x 4 in (3.1 cm x 10.1 cm)	2 in x 4 in (5 cm x 10.1 cm)
Bracing, diagonal	1 in x 4 in (2.5 cm x 10.1 cm)	1 in x 4 in (2.5 cm x 10.1 cm)	1 in x 4 in (2.5 cm x 10.1 cm)	2 in x 4 in (5 cm x 10.1 cm)
Tie-ins	1 in x 4 in (2.5 cm x 10.1 cm)	1 in x 4 in (2.5 cm x 10.1 cm)	1 in x 4 in (2.5 cm x 10.1 cm)	1 in x 4 in (2.5 cm x 10.1 cm)

All members are used on edge
+ to 3 ft (.9 m) span
++ to 10 ft (3 m) span
* these data are based on one working level and two additional planked levels

22.D.02 Bracing.

a. Diagonal bracing shall be provided to prevent the poles from moving in a direction parallel with the wall of the building or from buckling.

b. Full diagonal bracing shall be erected across the entire face of pole scaffolds in both directions. Braces shall be spliced at the poles. The inner row of poles on medium and heavy-duty scaffolds shall be braced in a similar manner.

c. Cross bracing shall be provided between inner and outer sets of poles in independent pole scaffolds.

d. The free ends of pole scaffolds shall be cross braced.

22.D.03 Splices.

a. Where wood poles are spliced, the ends shall be squared and the upper section shall rest squarely on the lower section.

b. Splice plates shall be provided on two adjacent sides and shall be not less than 4 ft (1.2 m) in length, overlapping the abutted ends equally, and have the same width and not less than the cross sectional area of the pole. The splice shall be capable of developing strength in any direction equal to the spliced members.

22.D.04 Ledgers and bearers.

a. Ledgers and bearers shall be installed on edge.

b. Ledgers and bearers shall not be spliced between poles.

c. Ledgers shall be long enough to extend over a minimum of two poles and shall be reinforced by bearing blocks nailed to the side of the pole to form a support for the ledger.

d. Bearers shall be long enough to project at least 3 in (7.6 cm) over the ledgers of the inner and outer rows of poles for support.

e. Every wooden bearer on single pole scaffolds shall be reinforced with a 3/16-in x 2-in (.47-cm x 5-cm) steel strip, or equivalent, secured to its lower edge throughout the length.

22.D.05 Independent pole scaffolds shall be set as near to the wall of the building as practical.

22.D.06 All pole scaffolds shall be securely guyed or tied to the structure. Where the height or length exceeds 25 ft (7.6 m), the scaffold shall be secured at intervals not greater than 25 ft (7.6 m) vertically and horizontally.

22.E SCAFFOLDS - SUSPENDED

22.E.01 Suspended scaffolds shall be designed, constructed, operated, inspected, tested, and maintained as specified in the operating manual for the device.

22.E.02 Inspections.

a. Suspended scaffold systems shall be inspected prior to being placed in service to determine that the system conforms to this manual and the manufacturer's specifications.

b. Every suspended scaffold shall be tested with twice the maximum anticipated load before being put into operation. ***> See 22.B.01.***

c. Each hoist shall be inspected before, and trial operated after, every installation and re-rigging in accordance with the manufacturer's specifications.

d. Connection and anchorage systems of suspended scaffold shall be inspected at the beginning of each shift.

e. All wire ropes, fiber and synthetic ropes, slings, hangers, hoists, rigging, fall protection equipment, platforms, anchorage points and their connections, and other supporting parts shall be inspected before every installation, daily thereafter, and periodic while the scaffold is in use.

f. Governors and secondary brakes for powered hoists shall be inspected and tested per the manufacturer's recommendations: at the minimum, inspections shall be made annually.

(1) Inspections and tests shall include a verification that the initiating device for the secondary braking operates as intended.

(2) A copy of the latest inspection and test report shall be maintained on the job site.

g. Records of inspections conducted while the unit is at the work site shall be maintained at the work site.

22.E.03 Only personnel trained in the use of the suspended work platform shall be authorized to operate it. Training shall include:

a. Reading and understanding the manufacturer's operating manual and any associated rules and instructions, or training by a qualified person on the contents on these documents, and

b. Reading and understanding all decals, warnings, and instructions on the device.

22.E.04 All parts of all suspended scaffolds shall have a minimum safety factor of 4. A minimum safety factor of 6 is required for support ropes.

22.E.05 Support ropes.

a. Support ropes shall be attached at the vertical centerline of the outrigger and the attachment shall be directly over the hoist machine.

b. Support ropes shall be vertical for their entire length. The scaffold shall not be swayed nor the support ropes fixed to any intermediate points to change the original path of travel.

c. Support ropes shall have the fixed end equipped with a proper size thimble and secured by eye splicing or equivalent means. Free ends shall be brazed or secured to prevent fraying.

d. The wire rope for traction hoists shall be of such length that the operator may descend to the lowest point of travel without the end of the wire rope entering the hoist. Where the wire rope is inadequate for the lowest descent, provision shall be made to prevent the hoist from running off the wire rope.

e. On winding drum type hoists, running ends of suspension ropes shall be attached by positive means to the hoisting drum and at least four wraps of the rope shall remain on the drum at all times.

f. Support ropes shall be capable of resisting chemicals or conditions to which they are exposed.

g. No welding, burning, riveting, or open flame work shall be performed on any platform suspended by fiber or synthetic rope.

h. Defective or damaged rope shall not be used as lifelines or suspension lines. The repairing of wire rope is prohibited.

22.E.06 All suspension scaffold support devices such as outrigger beams, cornice hooks, parapet clamps, or similar devices shall:

a. Be made of mild steel, wrought iron, or equivalent materials;

b. Be supported by bearing blocks;

c. Rest on surfaces capable of supporting the reaction forces imposed by the scaffold hoist operating at its maximum rated load; and

d. Be secured against movement by tiebacks installed at right angles to the face of the building whenever possible and secured to a structurally sound portion of the building. Tiebacks shall be equivalent in strength to the hoisting rope.

22.E.07 Outrigger beams.

a. Outrigger beams shall be made of structural metal and shall be restrained to prevent movement.

b. The inboard ends of outrigger beams shall be stabilized by bolts or other direct connections to the floor or roof deck, or they shall have their inboard ends stabilized by counterweights, except mason's multiple point adjustable suspension scaffold outrigger beams shall not be stabilized by counterweights.

c. Before use, direct connections shall be evaluated by a competent person who shall affirm that the supporting surfaces are capable of supporting the loads to be imposed. Mason's multiple point adjustable suspension scaffold connections shall be designed by a licensed engineer experienced in scaffold design.

d. Counterweights shall be made of non-flowable solid material, shall be secured to the outrigger beams by mechanical means, and shall not be removed until the scaffold is disassembled.

e. Outrigger beams shall be secured by tiebacks equivalent in strength to the suspension ropes. Tiebacks shall be secured to a structurally sound portion of the building or structure and shall be installed parallel to the centerline of the beam.

f. Outrigger beams shall be provided with stop bolts or shackles at both ends.

g. When channel iron beams are used in place of I-beams, the channels shall be securely fastened together with the flanges turned outward.

h. Outrigger beams shall be installed with all bearing supports perpendicular to the beam centerline.

i. Outrigger beams shall be set and maintained with the web in a vertical position.

j. Where a single outrigger beam is used, the steel shackle or clevises with which the wire ropes are attached to the beam shall be placed directly over the hoisting machines.

22.E.08 Hoisting machines

a. Hoisting machines shall be of a type tested and listed by a nationally recognized testing laboratory.

b. Each hoist shall contain a name plate(s) stating:

(1) Manufacturer's name,

(2) Maximum load rating,

(3) Identification number, and

(4) Wire rope specifications.

c. Powered hoists shall be electric-, air-, hydraulic-, or propane-powered. Gasoline-powered hoists are prohibited.

d. All powered hoists shall be equipped with speed reducers and shall be provided with a primary brake and a secondary brake.

(1) The primary brake shall automatically engage whenever power is interrupted or whenever the operator ceases to apply effort;

(2) The secondary brake shall stop and hold the hoist under over speed or abnormal conditions. Every secondary brake shall be periodically tested under simulated conditions in accordance with the manufacturer's recommendations.

e. Each powered hoist shall have its own separate control.

(1) If the control is of the push-button type, it shall be constant pressure;

(2) If the control is of the fixed-position type, it shall have provision for automatic locking when in the off position, or shall be guarded against accidental actuation; and

(3) If the control is of the level type, it may be of the constant pressure type or of the fixed-position type.

f. Manual operation of powered hoists may be provided if the hoist is designed so that not more than one person per hoist is required to perform this operation.

(1) During manual operation, a means shall be provided to make the prime mover inoperative.

(2) Instruction shall be provided advising personnel to disconnect the power source before using a manual crank.

g. Manually-operated hoists.

(1) Manual operation shall provide a means to prevent rapid handle movement or fast unspooling. Mechanisms used to allow fast unspooling during the erection process shall not be in place on the scaffold.

(2) In the event a controlled descent device is used, it shall not bypass the secondary brake.

(3) All winding drum hoists shall be provided with a driving pawl and a locking pawl that automatically engages when the driving pawl is released.

(4) Gripping-type hoists shall be designed so that the hoist is engaged on the suspension rope at all times, including all travel actuations of the operating lever.

(5) Each winding drum hoist shall be provided with a positive means of attachment of the suspension hoist. The drum attachment shall develop a minimum of four times the rated capacity of the hoist.

(6) Each hoist shall require a positive crank force to descend.

22.E.09 Platforms.

a. Light metal platforms, when used, shall be of a type tested and listed by a nationally-recognized testing laboratory.

b. Ladder-type platforms.

(1) Ladder-type platforms shall be constructed in accordance with Table 22-2.

(2) The side stringer for ladder-type platforms shall be of clear straight-grained spruce or materials of equivalent strength and durability.

(3) The rungs shall be of straight-grained oak, ash, or hickory, at least 1-1/8 in (2.8 cm) in diameter, with 7/8-in (2.2-cm) tenons mortised into the side stringers at least 7/8 in (2.2 cm).

TABLE 22-2

LADDER-TYPE PLATFORMS

Component	Length of platform (feet, m)				
	12 (3.7)	14 & 16 (4.3 & 4.9)	18 & 20 (5.5 & 6.1)	22 & 24 (6.7 & 7.3)	28 & 30 (8.5 & 9.1)
Side stringers, minimum cross sections (finished sizes, inches,):					
at ends	1-3/4 x 2-3/4 (4.4 x 6.9)	1-3/4 x 2-3/4 (4.4 x 6.9)	1-3/4 x 3 (4.4 x 7.6)	1-3/4 x 3 (4.4 x 7.6)	1-3/4 x 3-1/2 (4.4 x 8.9)
at middle	1-3/4 x 3-3/4 (4.4 x 9.5)	1-3/4 x 3-3/4 (4.4 x 9.5)	1-3/4 x 4 (4.4 x 10.1)	1-3/4 x 4-1/4 (4.4 x 10.8)	1-3/4 x 5 (4.4 x 12.7)
Reinforcing strips	(1)	(1)	(1)	(1)	(1)
Rungs	(2)	(2)	(2)	(2)	(2)
Tie rods: number (minimum)	3	4	4	5	6
diameter (minimum) (in/cm)	1/4 (0.6)	1/4 (0.6)	1/4 (0.6)	1/4 (0.6)	1/4 (0.6)
Flooring, minimum finished sizes (in/cm)	1/2 x 2-3/4 (1.2 x 6.9)	1/2 x 2-3/4 (1.2 x 6.9)	1/2 x 2-3/4 (1.2 x 6.9)	1/2 x 2-3/4 (1.2 x 6.9)	1/2 x 2-3/4 (1.2 x 6.9)

NOTE:
(1) A 1/8 x 7/8 in (0.3 x 2.2 cm) steel reinforcing strip or its equivalent shall be attached to the side or underside, full length.
(2) Rungs shall be 1-1/8 in (2.8 cm) diameter tenons and the maximum spacing shall be 12 in (30.4 cm) center to center.

(4) The stringers shall be tied with tie rods not less than 1/4 in (0.6 cm) diameter passing through the stringers and riveted up tight against washers on both ends.

(5) The flooring strips shall be spaced not more than 5/8 in (1.5 cm) apart except at the side rails where the space may be 1 in (2.5 cm).

c. Plank platforms.

(1) Plank platforms shall be composed of not less than nominal 2-in x 10-in (5-cm x 25.4-cm) unspliced planks, cleated together on the underside, starting 6 in (15.2 cm) from each end at intervals not to exceed 4 ft (1.2 m).

(2) The plank platform shall not extend beyond the hangers more than 12 in (30.4 cm). A bar or other effective means shall be securely fastened to the platform at each end to prevent its slipping off the hanger.

(3) The span between hangers for plank platforms shall not exceed 8 ft (2.4 m).

d. Beam platforms.

(1) Beam platforms shall have side stringers of lumber not less than 2 in x 6 in (5 cm x 15.2 cm), set on edge.

(2) The span between hangers shall not exceed 12 ft (3.6 m) when beam platforms are used.

(3) The flooring shall be of 1-in x 6-in (2.5-cm x 15.2-cm) material properly nailed. Floor boards shall not be spaced more than 1/2 in (1.2 cm) apart.

(4) The flooring shall be supported on 2-in x 6-in (5-cm x 15.2-cm) cross beams, laid flat and set into the upper edge

of the stringers with a snug fit, at intervals of not more than 4 ft (1.2 m), nailed securely in place.

22.E.10 Suspended scaffolds shall be guyed, braced, guided, or equipped with tag line to prevent swaying.

22.E.11 Two-point suspension scaffolds.

a. Two-point suspension scaffold platforms shall not be less than 20 in (50.8 cm) nor more than 36 in (91.4 cm) wide. The platform shall be securely fastened to the hangers by U-bolts or by other equivalent means.

b. The hangers of two-point suspension scaffolds shall be made of mild steel, or equivalent materials, having a cross sectional area capable of sustaining four times the maximum rated load and shall be designed with a support for a standard railing.

c. Two-point suspension scaffolds shall be securely lashed to the structure. Window cleaner's anchors shall not be used.

d. The platform on every two-point suspension scaffolds shall be of the light metal-, ladder-, plank-, or beam-type.

e. Two-point suspension scaffolds shall not be joined by bridging.

f. Two-point suspension scaffold platforms, when in use, shall be level within 1 in (2.5 cm) for every 1 ft (0.3 m) of platform length.

22.E.12 Mason's multiple-point adjustable suspension scaffolds.

a. When employees on the scaffold are exposed to overhead hazards, overhead protection equivalent in strength to 2-in (5-cm) planking shall be provided on the scaffold not more than

9 ft (2.7 m) above the platform, laid tight and extending the entire width of the scaffold.

b. The scaffold shall be capable of sustaining a load of 50 psf (2394 Pa) and shall not be overloaded.

c. The platform shall be suspended by wire ropes from overhead outrigger beams.

22.E.13 Stonesetters' multiple-point adjustable suspension scaffolds.

a. Stonesetters' multiple-point adjustable suspension scaffolds shall be capable of sustaining a load of 25 psf (1197 Pa) and shall not be overloaded.

b. Stonesetters' multiple-point adjustable suspension scaffolds shall not be used for storage of stone or other heavy materials.

c. The scaffold platform shall be securely fastened to the hangers by U-bolts or other equivalent means.

d. Stonesetters' multiple-point adjustable suspension scaffolds shall be suspended from metal outriggers, iron brackets, wire rope slings, or iron hooks.

e. When two or more stonesetters' multiple-point adjustable suspension scaffolds are used on a structure, they shall not be bridged one to the other, but shall be maintained at even height with platforms abutting closely.

22.E.14 Working capacities.

a. On suspension scaffolds designed for a working load of 500 lb (226.8 kg), no more than two employees shall be permitted to work at one time.

b. On suspension scaffolds with a working load of 750 lb (340.2 kg), no more than three people shall be permitted to work at one time.

22.E.15 Fall protection.

a. Each person supported by a suspended scaffold shall be protected by a body harness system. ***> See 21.C.01***

b. Full-body harnesses shall be attached by lanyard to a lifeline, trolley line, or scaffold structural member. However, when overhead obstructions or additional platform levels are part of a single-point or two-point adjustable suspension scaffold, then lifelines shall not be used.

(1) Lifelines, when used, shall be fastened to a fixed safe point of anchorage, shall be independent of the scaffold, and shall be protected from sharp edges and abrasion;

(2) Trolley lines, when used, shall be secured to two or more structural members of the scaffold and shall not be attached to the suspension ropes;

(3) When lanyards are connected to trolley lines or structural members on a single-point or two-point adjustable suspension scaffold, the scaffold shall be equipped with additional independent support lines and automatic locking devices capable of stopping the fall of the scaffold in the event one or both of the suspension ropes fail. The independent support lines shall be equal in number and strength to the suspension ropes; and

(4) Lifelines, independent support lines, and suspension ropes shall not be attached to one another and shall not be attached to or use the same point of anchorage.

c. To keep the lifeline continuously attached, with a minimum of slack, to a fixed structure, the attachment point of the lifeline shall be changed as the work progresses.

22.F CRANE SUPPORTED WORK PLATFORMS

22.F.01 Crane supported work platforms shall be used only when the erection, use, and dismantling of conventional means of reaching a work site, such as a personnel hoist, ladder, stairway, or scaffold would be more hazardous or is not possible because of structural design or work site conditions. The person responsible for the lift shall perform an AHA and attest to the need for the operation in writing. The responsible person shall sign the AHA and submit it to the GDA for acceptance. Personnel shall not be hoisted until the GDA has accepted the AHA. (Crane supported work platforms may be used for routine access of employees to underground construction via a shaft.)

22.F.02 The work platform and suspension system shall be designed by a registered engineer or a qualified person competent in structural design.

a. The work platform (excluding fall protection systems) shall be capable of supporting, without failure, its own weight and at least five times the maximum intended load.

b. The suspension system shall be designed to minimize tipping of the platform due to movement of the employees on the work platform.

22.F.03 Crane supported work platforms shall meet the following requirements:

a. The scaffold shall be of metal or metal frame construction with a standard railing.

b. A grab rail shall be installed inside the entire perimeter of the personnel platform.

c. Access gates, if installed, shall not swing outward during hoisting and shall be equipped with a restraining device to prevent accidentally opening.

d. Headroom shall be provided that will allow employees to stand upright in the platform.2

e. All welding of the work platform and its components shall be performed by a qualified welder familiar with the weld grades, types, and material specified in the platform design.

f. The platform shall be conspicuously posted with a plate or other permanent marking that indicates the weight of the platform and its rated load capacity or maximum intended load.

22.F.04 Rigging.

a. When a wire rope bridle is used to connect the work platform to the load line, each bridle leg shall be connected to a master link or shackle in such a manner to ensure that the load is evenly distributed among the bridle legs.

b. The hook connection to the platform rigging shall be of a type that can be closed and locked to eliminate the hook throat opening. Alternately, an alloy anchor type shackle with a bolt, nut, and retaining pin may be used.

c. Wire rope and rigging hardware shall be capable of supporting, without failure, at least five times the maximum intended load. Where rotation-resistant rope is used the slings shall be capable of supporting without failure at least ten times the maximum intended load.

d. All eyes in wire rope slings shall be fabricated with thimbles.

e. Bridles and associated rigging for attaching the platform to the hoist line shall be used only for the platform and the employees and their tools and materials necessary for the work and shall not be used for any other purpose when not hoisting personnel.

22.F.05 Work platform use.

a. A competent supervisor shall observe the operations while personnel are working from crane supported work platforms.

b. The number of employees occupying the work platform shall not exceed the number required for the work being performed.

c. Work platforms shall be used only for employees and their tools and materials necessary for the work. Work platforms shall not be used as material hoists when not hoisting personnel.

d. Materials and tools for use during a personnel lift shall be secured to prevent displacement and shall be evenly distributed within the platform while it is suspended.

22.F.06 All cranes shall comply with the applicable requirements in Sections 16.

22.F.07 Operational Criteria.

a. Hoisting of the personnel platform shall be in a slow, controlled, cautious manner with no sudden movements.

b. Load lines shall be capable of supporting, without failure, at least 7 times the maximum intended load, except where rotation resistant rope is used the lines shall be capable of supporting, without failure, at least 10 times the maximum intended load. The required design factor is achieved by taking the current safety factor of 3.5 and applying the 50% de-rating of the crane capacity.

c. The crane shall be uniformly level within 1% of level grade and located on firm footing. Cranes equipped with outriggers shall have them all fully deployed to load chart criteria following manufacturer's specifications, as far as practical, when hoisting personnel.

d. The total weight of the loaded personnel platform and related rigging shall not exceed 50% of the rated capacity for the radius and configuration of the crane or derrick.

e. Only cranes with power-operated up and down boom hoists and load lines shall be used to support work platforms. The use of machines having live booms is prohibited. Platforms shall be lowered under power and not by the brake.

f. Only cranes with an A2B device that prevents contact between the load block or overhaul ball and the boom tip, or a system that deactivates the hoisting action before damage occurs shall be used.

g. Cranes with variable angle booms shall be equipped with boom angle indicators readily visible to the operator.

h. Cranes with telescoping booms shall be equipped with a device to indicate clearly to the operator, at all times, the boom's extended length, or an accurate determination of the load radius to be used during the lift shall be made prior to hoisting personnel.

i. The load line of the hoist drum shall have a system or device on the power train, other than the load hoist brake, that regulates the lowering rate of speed of the hoist mechanism (controlled lowering): free fall is prohibited.

22.F.08 Proof Testing.

a. Prior to hoisting employees on a crane suspended work platform, and after any report or modification, the platform and rigging shall be proof tested to 125% of the platform's rated capacity by holding it in a suspended position for 5 minutes with the proof test load evenly distributed on the platform (this may be done concurrently with the trial lift).

b. After proof testing, a competent person shall inspect the platform and rigging.

22.F.09 Trial Meeting, Lift and Inspection.

a. Prior to every trial lift, the crane or derrick operator, signal person, employees to be lifted, and the competent person shall attend a pre-lift meeting to review the applicable parts of this manual, the AHA, and the details of this particular lift.

b. A trial lift with the unoccupied work platform loaded at least to the anticipated lift weight shall be made from the ground level, or any other location where employees will enter the platform, to each location at which the work platform is to be hoisted and positioned.

c. The trial lift shall be made immediately prior to placing personnel on the platform and shall be repeated prior to hoisting employees after the crane is moved and set up at new location or returned to a previously used location, and when the lift route is changed unless the competent person determines that the route change is not significant.

d. The competent person shall determine that all systems, controls, and safety devices are activated and functioning properly; that no interferences exist; and that all configurations necessary to reach those work locations will allow the operator to remain under the 50% limit of the crane's rated capacity.

e. Materials and tools to be used during the actual lift may be loaded in the platform (evenly distributed and secured) for the trial lift.

f. After the trial lift and just prior to hoisting employees, the platform shall be hoisted a few inches and inspected to ensure that it is secure and properly balanced.

g. A visual inspection of the crane, derrick, rigging, work platform, and the crane or derrick support base shall be conducted by a competent person immediately after the trial lift to determine whether the testing has exposed any defect or produced any adverse effect upon any component or structure.

h. Any defects found during inspections shall be corrected before hoisting personnel.

i. If the load rope goes slack, the hoisting system shall be re-inspected to ensure that all ropes are properly seated on drums and sheaves.

22.F.10 Work Practices.

a. Before employees enter or exit a hoisted personnel platform that is not landed, the platform shall be secured to the structure, unless securing to the structure creates an unsafe condition.

b. The rated load capacity of the platform shall not be exceeded.

c. The number of employees occupying the work platform shall not exceed the number required for the work being performed.

d. Work platforms shall be used only for employees and their tools and materials necessary for the work; work platforms shall not be used as material hoists when not hoisting personnel.

e. Materials and tools for use during a personnel lift shall be secured to prevent displacement and shall be evenly distributed within the platform while it is suspended.

f. Employees (except a designated signal personal) shall keep

all parts of the body inside the platform during raising, lowering, and positioning.

g. A competent person shall observe the operations while personnel are working from the crane supported work platform.

h. Hoisting of employees shall be discontinued upon indication of any dangerous weather conditions or other impending danger.

i. Employees being hoisted shall remain in the continuous sight of, and in direct contact communication with, the crane operator, competent person, and signal person. In situations where it this not possible, direct communication by radio shall be maintained at all times. The crane operator shall bring all operations to an immediate stop if radio communications are lost.

j. Taglines shall be used to help control the work platform unless the competent person determines that their use would present a greater hazard.

k. The crane or derrick operator shall remain at the controls at all times with the engine crane running whenever the platform is occupied.

22.F.11. Personal Fall Protection

a. Except when working over water, all employees occupying the work platform shall wear a properly anchored personal fall protection system. Depending of the type of work to be done and the height of the work platform above a lower surface, all workers shall wear either a full-body harness fall arrest system or a body-belt fall restraint system. The competent person on-site will assess each situation and determine which system would best fit the current work requirement. Particular attention should be paid to anchor points and capacities.

b. When working over water, PFD, lifesaving equipment, and safety skiffs meeting the requirements of this manual shall be used.

22.F.12 Employees shall not be hoisted unless the following conditions are determined to exist:

a. The load test and proof test requirements are satisfied,

b. Hoist ropes are free of kinks,

c. Multiple part lines are not twisted around one another,

d. The primary attachment is centered over the platform, and

e. The hoisting system is inspected if the load rope is slack to ensure all ropes are properly seated on drums and in sheaves.

22.F.13 Traveling.

a. Hoisting of personnel while the crane is traveling is prohibited, except for:

(1) Portal, tower, and locomotive cranes; or

(2) Where it is demonstrated and documented that there is no less hazardous way to perform the work.

b. If the requirements of 22.F.13a are satisfied, the following safeguards shall be implemented while cranes travel with hoisted personnel:

(1) Crane travel shall be restricted to a fixed track or runway,

(2) Travel shall be limited to the load radius of the boom used during the lift,

(3) The boom must be parallel to the direction of travel,

(4) A completed trial run shall be performed to test the route of travel before employees are allowed to occupy the platform (this trial run may be performed when the trial lift required by this manual is performed)

22.G FORM AND CARPENTER'S BRACKET SCAFFOLDS

22.G.01 At the minimum, form scaffolds shall be designed in accordance with Table 22-3.

22.G.02 Each bracket, except for wooden bracket form scaffolds, shall be attached to the supporting formwork or structure by means of one or more of the following:

a. Nails;

b. A metal stud attachment device ;

c. Welding;

d. Hooking over a secured structural supporting member, provided the form walers are bolted to the form or secured by snap ties or tie-bolts extending through the form and securely anchored; or

e. For carpenter's bracket scaffolds only, by a bolt extending through to the opposite side of the structure's wall.

22.G.03 Wooden form scaffolds shall be an integral part of the form panel.

22.G.04 Folding-type metal brackets, when extended for use, shall be either bolted or secured with a locking-type pin.

22.G.05 Brackets shall consist of a triangular shaped frame made of wood with a cross-section not less than 2-in x 3-in (5-cm x 7.6-cm) or of 1-1/4-in x 1-1/4-in x 1/8-in (3.1-cm x 3.1-cm x 0.3-cm) structural angle iron.

TABLE 22-3

FORM SCAFFOLDS

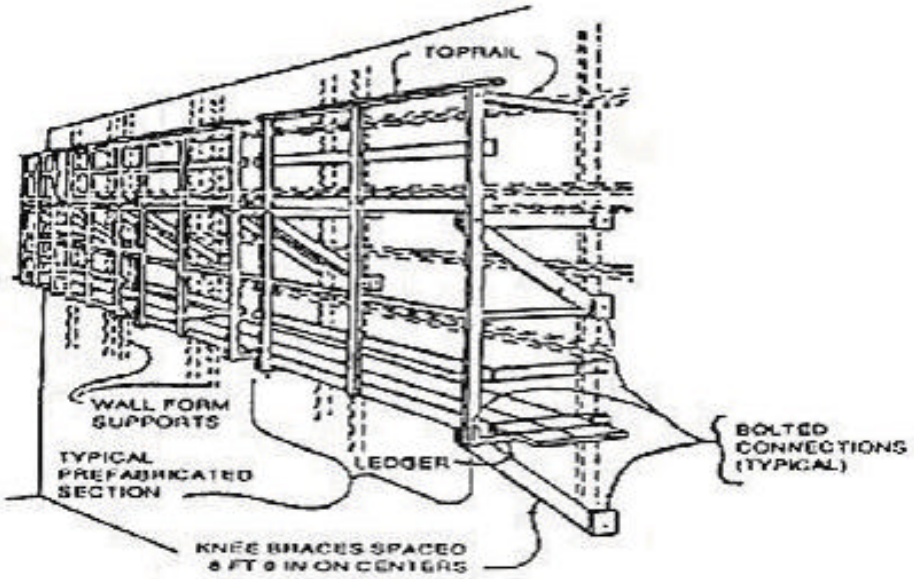

Minimum design criteria for light-duty wooden bracket form scaffolds

Members	Dimensions
Bracket uprights	2 x 4 in or 2 x 6 in (5 x 10.1 cm or 5 x 15.2 cm)
Bracket support ledgers	2 x 6 in (5 x 15.2 cm)
Maximum bracket width	3 ft 6 in (1 m)
Bracket braces	1 x 6 in (2.5 x 15.2 cm)
Guardrail post	2 x 4 in (5 x 10.1 cm)
Guardrail height	36 to 42 in (91.4 to 106.6 cm)
Midrail	1 x 6 in (2.5 x 15.2 cm)
Toeboards	1 x 6 in (2.5 x 15.2 cm)
Bracket upright spacing	8 ft (2.4 m) (on centers)

TABLE 22-3 (CONTINUED)

FORM SCAFFOLDS

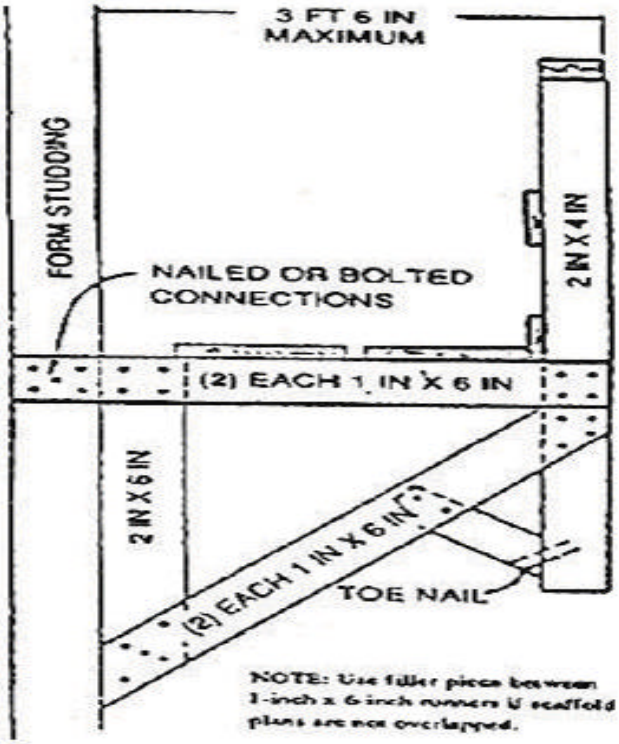

Minimum design criteria for light-duty figure-four form scaffolds

Members	Dimensions
Bracket uprights	2 x 4 in or 2 x 6 in (5 x 10.1 cm or 5 x 15.2 cm)
Bracket outrigger ledgers (2)	1 x 6 in (2.5 x 15.2 cm)
Bracket braces (2)	1 x 6 in (2.5 x 15.2 cm)
Maximum length of ledgers	3 ft 6 in (1 m) (unsupported)
Bracket upright spacing	8 ft (2.4 m) (on centers)

TABLE 22-3 (CONTINUED)

FORM SCAFFOLDS

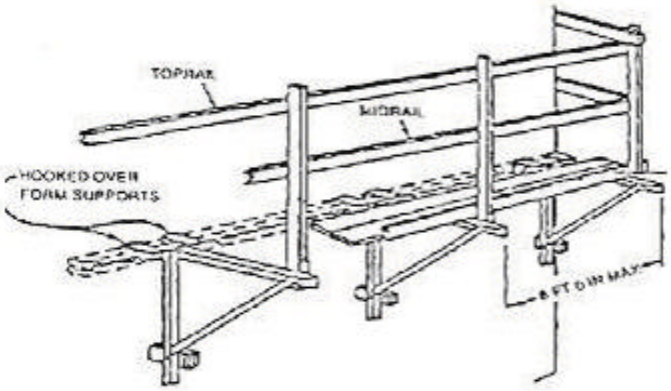

Minimum design criteria for light-duty metal bracket form scaffolds

Members	Dimensions
Guardrail post	2 x 4 in (5 x 10.1 cm)
Guardrail	2 x 4 in (5 x 10.1 cm)
Guardrail height	36 to 45 in (91.4 to 114.3 cm)
Midrail	1 x 6 in (2.5 x 15.2 cm)
Toeboards	1 x 6 in (2.5 x 15.2 cm)
Metal bracket spacing (metal bracket or scaffold jack dimensions in accordance with manufacturer's design)	8 ft (2.4 m)

22.G.06 Bolts used to attach brackets to structures shall not be less than 5/8 in (1.5 cm) in diameter.

22.G.07 Maximum bracket spacing shall be 8 ft (2.4 m) on centers.

22.G.08 Figure-four form scaffolds shall have bearers consisting of two pieces of 1-in x 6-in (2.5-cm x 15.2-cm) lumber nailed on opposite sides of the vertical support; bearers shall project not more than 3.5 ft (1 m) from the outside of the form support and shall be braced and secured to prevent tipping or turning.

22.G.09 The knee or angle brace for figure four form scaffolds shall intersect the bearer at least 3 ft (0.9 m) from the form at an angle of 45° and the lower end shall be nailed to a vertical support.

22.H HORSE SCAFFOLDS

22.H.01 Horse scaffolds shall not be constructed or arranged more than two tiers or 10 ft (3 m) in height: scaffolds shall be 5° feet or less in height and 5 ft (1.5 m) or more in width.

22.H.02 The members of horse scaffolds shall not be less than those specified in Table 22-4.

TABLE 22-4

MINIMUM DIMENSIONS FOR HORSE SCAFFOLD MEMBERS

Members	Dimensions
Horizontal members of bearers	3 x 3.9 in (7.6 x 10 cm)
Legs	2 x 3.9 in (5 x 10 cm)
Longitudinal brace between legs	1 x 5.9 in (2.5 x 15 cm)
Gusset brace at top of legs	1 x 7.9 in (2.5 x 20 cm)
Half diagonal braces	2 x 3.9 in (5 x 10 cm)

22.H.03 Horse scaffolds shall be spaced not more than 5 ft (1.5 m) for medium duty and not more than 8 ft (2.4 m) for light duty.

22.H.04 When arranged in tiers, each horse scaffold shall be placed directly over the horse scaffold in the tier below. The legs shall be nailed or otherwise secured to the planks to prevent displacement or thrust and each tier shall be cross braced.

22.I PUMP JACK SCAFFOLDS

22.I.01 Pump jack scaffolds shall not carry a working load exceeding 500 lb (226.8 kg). The components shall not be loaded in excess of the manufacturer's recommended limits.

22.I.02 Pump jack brackets, braces, and accessories shall be fabricated from metal plates and angles and installed in accordance with the manufacturer's recommendations. Installation and operational manuals shall be available upon request of the GDA.

22.I.03 Poles.

a. Pole lumber shall be two 2-in x 4-in (5-cm x 10.1-cm) stock, of Douglas fir, or equivalent, straight-grained, clear, free of cross-grain, shakes, large loose or dead knots, and other defects that might impair strength.

b. Poles shall not exceed 30 ft (9.1 m) in height.

c. When poles are constructed of two continuous lengths they shall be of 2-in x 4-in (5-cm x 10.1-cm) stock, spiked together with the seam parallel to the bracket, and with 10d nails, no more than 12 in (30.4 cm) center-to-center, staggered uniformly from opposite outside edges.

d. If 2-in x 4-in (5-cm x 10.1-cm) stock is spliced to make up the pole, the splices shall be so constructed as to develop the full strength of the member.

e. Poles shall be secured to the wall by triangular bracing, or equivalent, at the bottom, top, and other points to provide a maximum vertical spacing of not more than 10 ft (3 m) between braces. Each brace shall be capable of supporting a minimum of 225-lb (102-kg) tension or compression.

f. When wood scaffold planks are used as platforms, poles used for pump jacks shall not be spaced more than 10 ft (3 m) on center. When fabricated platforms are used that comply with all other provisions of this Section, pole spacing may exceed 10 ft (3 m) on center if permitted by the manufacturer.

22.I.04 Brackets.

a. Each pump jack bracket shall have two positive gripping mechanisms to prevent any failure or slippage.

b. Platform brackets shall be fully decked and the planking secured.

c. For the pump jack bracket to pass bracing already installed, an extra brace shall be used approximately 4 ft (1.2 m) above the one to be passed until the original brace is reinstalled.

22.I.05 Not more than two persons shall be permitted at one time upon a pump jack scaffold between any two supports.

22.I.06 When a work bench is used at an approximate height of 42 in (106.6 cm), the top guardrail may be eliminated if the work bench is fully decked, the planking secured, and is capable of withstanding 200 lb (90.7 kg) pressure in any direction. Employees shall not be permitted to use a workbench as a scaffold platform.

22.I.07 A ladder shall provide access to the platform during use.

22.J ELEVATING WORK PLATFORMS

22.J.01 Elevating work platforms shall be designed and constructed in accordance with ANSI/Scaffold Industry Association (SIA) A92.3, ANSI/SIA A92.5, and ANSI/SIA A92.6, as appropriate.

22.J.02 Elevating work platforms shall be operated, inspected, and maintained as specified in the operating manual for the equipment.

a. Elevating work platforms shall also comply with requirements of this Section and 16.A.

b. Records of inspections conducted while the unit is at the work site shall be maintained at the work site.

22.J.03 All boom-supported elevating work platforms shall be equipped with an alarm, or other suitable warning device, at the platform. The alarm shall be in operable condition and shall automatically activate when the machine base is more than 5° out of level in any direction.

22.J.04 Only personnel trained in the use of the elevating work platform shall be authorized to operate it. Training shall consist of:

a. Reading and understanding the manufacturer's operating manual and any associated rules and instructions, or training by a qualified person on the contents on these documents, and

b. Reading and understanding all decals, warnings, and instructions on the elevating work platform.

22.J.05 Before operating the work platform the operator shall:

a. Survey the work area for loose or soft ground, ditches, drop-offs or holes, bumps and floor obstructions, debris, overhead obstructions, ground and elevated energy sources, and other possible hazards;

b. Ensure the elevating work platform is on a firm, level surface;

c. Ensure the work platform is loaded in accordance with the manufacturer's specifications;

d. Ensure that outriggers and/or stabilizers are used if required by the manufacturer;

e. Ensure that, if the vehicle is on wheels, the wheels are locked or chocked; and

f. Ensure that fall protection systems are in place.

22.J.06 Elevating work platforms shall not be used by persons working on energized electrical wiring and/or equipment.

22.J.07 The use of personal fall protection devices shall be as specified in the manufacturer's operating manual. Personal fall protection devices, if used, may only be secured to manufacturer-approved hard points.

22.K VEHICLE-MOUNTED ELEVATING AND ROTATING WORK PLATFORMS

22.K.01 Vehicle-mounted elevating and rotating work platforms shall be designed and constructed in accordance with ANSI/SIA A92.2.

22.K.02 Vehicle-mounted elevating and rotating work platforms shall be operated, inspected, tested, and maintained as specified in the operating manual for that piece of equipment.

a. Vehicle-mounted elevating and rotating work platforms shall also comply with requirements of this Section and 16.A.

b. Records of inspections conducted while the unit is at the work site shall be maintained at the work site.

c. If the unit is considered, rated, and used as an insulating device, copies of the electrical insulating components and system tests conducted while the unit is at the work site shall be maintained at the work site.

22.K.03 Only personnel trained in the use of the vehicle-mounted elevating and rotating work platform shall be authorized to operate it. Training shall consist of:

a. Reading and understanding the manufacturer's operating manual and any associated rules and instructions, or training by a qualified person on the contents on these documents; and

b. Reading and understanding all decals, warnings, and instructions on the vehicle-mounted elevating and rotating work platform.

22.K.04 Transporting.

a. An aerial lift truck shall not be moved when the boom is elevated in a working position with personnel in the basket except for equipment that is specifically designed for this type of operation.

b. Before moving an aerial lift, the boom(s) shall be inspected to see that it is properly cradled and outriggers are in stowed positions, except as provided in a, above.

c. Aerial ladders shall be secured in the lower traveling position by the locking device on top of the truck cab and the manually operated device at the base of the ladder before the truck is moved for highway travel.

22.K.05 Operating practices.

a. When outriggers are used, they shall be positioned on pads or a solid surface and the brakes shall be set.

b. Wheel chocks shall be in place before using an aerial lift.

22.K.06 Fall protection.

a. Belting off to an adjacent pole structure or equipment while working from an aerial lift shall not be permitted.

b. Employees shall always stand firmly on the floor of the basket and shall not sit or climb on the edge of the basket or use planks, ladders, or other devices for a work position.

c. A harness and lanyard, or deceleration device of length or design with a suitable height anchorage such that any fall over the platform edge shall not cause impact with the ground, shall be worn by a worker when working from the basket of a vehicle mounted aerial lift.

22.L Mast Climbing Work Platform

22.L.01 An inspection will be performed prior to erecting the work platform.

a. An overhead inspection will be done to ensure that the work platform will not come in contact with any obstructions while moving up or down the mast. Special attention will be given to high voltage conductors.

b. An inspection of the ground will be done to ensure that there are no obstacles around the work platform and in the path of travel such as holes, drop-offs, debris, ditches, or soft fill.

c. Daily maintenance and inspections will be performed and documented. Copies will be maintained on the job site.

22.L.02 Only a designated operator will use the platform.

22.L.03 The platform will not be raised on uneven or sloped surfaces unless outriggers are used to level the platform and the ground is suitable to support the load.

22.L.04 Platforms will not be raised without outriggers extended and locked in proper operating position. The unit will be leveled before raising the platform. ***NOTE: Not all Mast Climbing Work Platforms are designed with freestanding capability. Check the machine and manual to see if the machine being operated has a freestanding height.***

22.L.05 The platform must be lowered when moved, and must be set up and leveled each time before it is elevated.

22.L.06 A mast climbing work platform, with platform elevated or personnel on the platform, will not be driven. The manufacturer's instructions will be referred to when moving a mast climbing work platform to determine the safe mast height for ground conditions, ground slope, and overhead obstructions.

22.L.07 Mast climbing work platforms will be properly tied to the building (or structure) within the manufacturer's recommended guidelines unless it is designed to be freestanding.

22.L.08 Mast climbing work platforms will not be moved unless everyone on the platform is aware of the direction the platform is being moved.

22.L.09 No ladders or structures of any kind will be used to increase the size or working height of platform.

22.L.10 Climbing of braces and guardrails is prohibited.

22.L.11 The work platform will not be raised in windy or gusty conditions. The operation manual will be followed to determine maximum in-service wind speed conditions. A copy of the operation manual will be available on the job site.

22.L.12 Platforms will not be altered or modified in any way. Changing the configuration may change load capacity, freestanding height, and tie frequency. Mechanical, hydraulic, or electrical changes may adversely affect operation of this machine.

22.L.13 A competent person will perform daily maintenance and inspections.

22.L.14 Training. Personnel will be trained before using and/or operating mast climbing work platforms. Each user and operator will:

a. Read and understand all cautions and danger warnings on the machine and in the operator's manual

b. Have a solid working understanding of the controls.

c. Understand the hazards associated with the use of mast climbing work platforms.

d. Ensure that only authorized personnel use the platform.

22.L.15 A damaged or malfunctioning machine will not be used. Operation of damaged equipment shall be discontinued until the unit is repaired.

SECTION 23

DEMOLITION

23.A GENERAL

23.A.01 Surveys and planning.

a. Prior to initiating demolition activities the following survey and plan shall be accomplished: ***> See lead and asbestos requirements in Section 6.***

(1) An engineering survey (by a Registered Professional Engineer) of the structure to determine the structure layout, the condition of the framing, floors, walls, the possibility of unplanned collapse of any portion of the structure (any adjacent structure where employees or property may be exposed shall be similarly checked), and the existence of other potential or real demolition hazards.

(2) A demolition plan - by a Registered Professional Engineer and based on the engineering and lead and asbestos surveys - for the safe dismantling and removal of all building components and debris.

b. The GDA and the Contractor's designated authority shall be provided written evidence that the required surveys have been performed and shall be provided a copy of the demolition plan.

c. All employees engaged in demolition activities shall be instructed in the demolition plan so that they may conduct their work activities in a safe manner.

23.A.02 All electric, gas, water, steam, sewer, and other service lines shall be shut off, capped, or otherwise controlled outside the building line before demolition is started.

a. In each case, any utility company that is involved shall be notified in advance.

b. The Contractor shall provide the GDA and the Contractor's designated authority with an engineering drawing (e.g., site plans, utility plans) that indicates the location of all service lines and the means for their control.

c. If it is necessary to maintain any power, water, or other utilities during demolition, such lines shall be temporarily relocated and protected.

d. If the project includes the abandonment or demolition of existing gas lines, ensure that the existing lines are accurately located and that procedures and installations are accomplished in accordance with the ANSI/American Gas Association's (AGA) Gas Piping Technology Committee (GPTC) guide ANSI/AGA GPTC Z380.1.

23.A.03 It shall be determined if any hazardous building materials, hazardous chemicals, gases, explosives, flammable materials, or dangerous substances have been used in any building construction, pipes, tanks, or other equipment on the property.

a. When such hazards are identified, testing shall be conducted to determine the type and concentration of the hazardous substance and test results shall be provided to the GDA and the Contractor's designated authority.

b. Such hazards shall be controlled or eliminated before demolition is started.

23.A.04 When employees work within a structure to be demolished that has been damaged by fire, flood, explosion, or other cause, the walls or floor shall be shored or braced.

23.A.05 Work progression.

a. Except for cutting holes in floors for chutes, holes through which to drop materials, preparation of storage space, and similar preparatory work, the demolition of floors and exterior walls shall begin at the top of the structure and proceed downward.

b. Each story of exterior wall and floor construction shall be removed and dropped into the storage space before commencing the removal of exterior walls and floors in the next story below.

23.A.06 Hazards to anyone from the fragmentation of glass shall be controlled.

23.A.07 Mechanical equipment shall not be used on floors on working surfaces unless such floors or surfaces are of sufficient strength to support the imposed load.

23.A.08 Employee entrances to multistory structures being demolished shall be protected by sidewalk sheds, canopies, or both.

a. Protection shall be provided from the face of the building for a minimum of 8 ft (2.4 m).

b. All such canopies shall be at least 2 ft (0.6 m) wider than the building entrances or openings (1 ft (0.3 m) wider on each side), and shall be capable of sustaining a load of 150 psi (1034.2 kPa).

23.A.09 Only those stairways, passageways, and ladders designated as means of access to the structure shall be used.

a. The designated means of access shall be indicated on the demolition plan. Other access ways shall be indicated as not safe for access and closed at all times.

b. The stairwell shall be covered at a point no less than two floors below the floor on which work is being performed.

c. Access to a floor where work is in progress shall be through a separate lighted, protected passageway.

23.A.10 During demolition, continuing inspections by a competent person shall detect hazards resulting from weakened or deteriorated floors, walls, or loosened material. No employee shall be permitted to work where such hazards exist until they are corrected by shoring, bracing, or other means.

23.B DEBRIS REMOVAL

23.B.01 Any chute opening into which debris is dumped shall be protected by a guardrail 42 in (106.6 cm) above the floor or other surface on which personnel stand to dump the material. Any space between the chute and the edge of openings in the floors through which it passes shall be covered.

23.B.02 When debris is dropped through openings in the floors without chutes, the openings and the area onto which the material is dropped shall be enclosed with barricades not less than 42 in (106.6 cm) high and not less than 6 ft (1.8 m) back from the projected edge of the opening above.

a. Signs warning of the hazard of falling materials shall be posted at each side of the debris opening at each floor.

b. Debris removal shall not be permitted in lower areas until debris handling ceases on the floors above.

23.B.03 All material chutes, or sections thereof, at an angle of more than 45° from the horizontal shall be enclosed, except for openings equipped with closures at or about floor level for the insertion of materials.

a. The openings shall not exceed 48 in (121.9 cm) in height measured along the wall of the chute.

b. Such openings, when not in use, shall be kept closed at all floors below the top floor.

23.B.04 A substantial gate shall be installed in each chute at or near the discharge end. A competent employee shall be assigned to control operation of the gate and the backing and loading of trucks.

23.B.05 When operations are not in progress, the area surrounding the discharge end of a chute shall be closed.

23.B.06 Where material is dumped from mechanical equipment or wheelbarrows, a toe board or bumper, not less than 4 in (10.1 cm) thick and 6 in (15.2 cm) high, shall be attached at each chute opening.

23.B.07 Chutes shall be designed and constructed of such strength as to eliminate failure due to impact of materials or debris loaded therein.

23.B.08 The storage of waste and debris on any floor shall not exceed the allowable floor loads.

23.B.09 In buildings having wood floor construction, the floor joists may be removed from not more than one floor above grade to provide storage space for debris provided falling material is not permitted to endanger the stability of the structure.

a. When wood floor beams serve to brace interior walls or free-standing exterior walls, such beams shall be left in place until other support can be installed to replace them.

b. Floor arches, to an elevation of not more than 25 ft (7.6 m) above grade, may be removed to provide storage area for debris provided such removal does not endanger the stability of the structure.

c. Storage space into which material is dumped shall be blocked off, except for openings for the removal of materials.

Such openings shall be kept closed when material is not being removed.

d. Floor openings shall have curbs or stop-logs to prevent equipment from running over the edge.

e. Any opening cut in a floor for the disposal of materials shall be not longer in size than 25% of the aggregate of the total floor area, unless the lateral supports of the removed flooring remain in place. Floors weakened or otherwise made unsafe by demolition shall be shored to carry safely the intended imposed load for demolition.

23.C WALL REMOVAL

23.C.01 Masonry walls, or sections of masonry, shall not be permitted to fall upon the floors of the building in such masses as to exceed the safe carrying capacities of the floors.

23.C.02 No wall section that is more than 6 ft (1.8 m) in height shall be permitted to stand without lateral bracing, unless such wall was designed and constructed to stand without such lateral support and is in a condition safe enough to be self-supporting. No wall section shall be left standing without lateral bracing any longer than necessary for removal of adjacent debris interfering with demolition of the wall. Exception to this requirement will be allowed for such wall sections that are designed and constructed to stand without lateral support.

23.C.03 Employees shall not be permitted to work on the top of a wall when weather constitutes a hazard.

23.C.04 Structural or load-supporting members on any floor shall not be cut or removed until all stories above such a floor have been demolished and removed. This shall not prohibit the cutting of floor beams for the disposal of materials or for the installation of equipment, providing the requirements of 23.B.09 and 23.D. are met.

23.C.05 Floor openings within 10 ft (3 m) of any wall being demolished shall be planked solid, except when employees are kept out of the area below.

23.C.06 In buildings of skeleton-steel construction, the steel framing may be left in place during the demolition of masonry. Where this is done, all steel beams, girders, and structural supports shall be cleared of all loose material as the masonry demolition progresses downward.

23.C.07 Walls that serve as retaining walls to support earth or adjoining structures shall not be demolished until such earth has been braced or adjoining structures have been underpinned.
***> See 23.A.05*.**

23.C.08 Walls shall not be used to retain debris unless capable of safely supporting the imposed load.

23.D FLOOR REMOVAL

23.D.01 Openings cut in a floor shall extend the full span of the arch between supports.

23.D.02 Before demolishing any floor arch, debris and other material shall be removed from such arch and other adjacent floor area.

a. Planks not less than 2 in x 10 in (5 cm x 25.4 cm) in cross section, full sized undressed, shall be provided for and shall be used by employees to stand on while breaking down floor arches between beams.

b. Such planks shall be so located as to provide a safe support for personnel should the arch between the beams collapse.

c. Straddle space between planks shall not exceed 16 in (40.6 cm).

23.D.03 Safe walkways, not less than 18 in (45.7 cm) wide, formed of wood planks not less than 2 in (5 cm) thick or of equivalent strength, shall be provided and used by personnel when necessary to enable them to reach any point without walking upon exposed beams.

23.D.04 Stringers of ample strength shall support the flooring planks. The ends of such stringers shall be supported by floor beams or girders and not by floor arches alone.

23.D.05 Planks shall be laid together over solid bearings with the ends overlapping at least 1 ft (0.3 m).

23.D.06 When floor arches are being removed, employees shall not be allowed in the area directly underneath. The area shall be barricaded to prevent access and signed to warn of the hazard.

23.E STEEL REMOVAL

23.E.01 When floor arches have been removed, planking shall be provided for the workers razing the steel framing.

23.E.02 Steel construction shall be dismantled column-by-column and tier-by-tier (columns may be in two-story lengths).

23.E.03 Any structural member being dismembered shall not be overstressed.

23.F MECHANICAL DEMOLITION

23.F.01 No person shall be permitted in any area that can be affected by demolition when balling or clamming is being performed. Only those persons necessary for the operations shall be permitted in this area at any other time.

23.F.02 The weight of the demolition ball shall not exceed 50% of the crane's rated load, based on the length of the boom and the maximum angle of operation at which the demolition ball will be

used, or it shall not exceed 25% of the nominal breaking strength of the line by which it is suspended, whichever is less.

23.F.03 The crane boom and load line shall be as short as possible.

23.F.04 The ball shall be attached to the load line with a swivel connection to prevent twisting of the load line and shall be attached by positive means so that the weight cannot accidentally disconnect.

23.F.05 When pulling over walls or portions of walls, all steel members affected shall have been cut free.

23.F.06 All roof cornices or other ornamental stonework shall be removed prior to pulling walls over.

SECTION 24

FLOOR AND WALL HOLES AND OPENINGS

24.A GENERAL

24.A.01 All floor and roof openings into which persons can accidentally walk or fall through shall be guarded by a physical barrier or covered.

24.A.02 All floor and roof holes through which equipment, materials, or debris can fall shall be covered.

24.A.03 Coverings for floor and roof openings shall be of sufficient strength to support any load that may be imposed and shall be secured in place to prevent accidental removal or displacement.

24.A.04 Conduits, trenches, and manhole covers and their supports, when exposed to vehicles or equipment, shall be designed to carry a truck rear axle load of 2 times the maximum anticipated load.

24.A.05 Wall openings, from which there is a drop of more than 4 ft (1.2 m) and the bottom of the opening is less than 3 ft (0.9 m) above the working surface, shall be guarded with a top rail or a top rail and intermediate rail or a standard guardrail. A toe board or enclosing screen shall be provided where the bottom of the wall opening, regardless of width, is less than 4 in (10.1 cm) above the working surface.

24.A.06 Wall opening protection shall meet one of the following requirements:

a. Barriers of such construction and mounting that, when in place at the opening, the barrier is capable of withstanding a load of at least 200 lb (90.7 kg) applied in any direction (except upward) with a minimum of deflection at any point on the top rail or corresponding member; or

b. Screens of such construction and mounting that they are capable of withstanding a load of at least 200 lb (90.7 kg) applied horizontally at any point on the near side of the screen. They may be of solid construction, or grill work with openings not more than 8 in (20.3 cm) long, or of slat work with openings not more than 4 in (10.1 cm) wide of unrestricted length.

24.A.07 Every hatchway and chute floor opening shall be guarded by a hinged floor-opening cover. The opening shall be barricaded with railings so as to leave only one exposed side. The exposed side shall be provided either with a swinging gate or so offset that a person cannot walk into the opening.

24.A.08 An extension platform outside a wall opening onto which materials can be hoisted for handling shall have a standard railing that meets 21.B of this manual. However, one side of an extension platform may have removable railings to facilitate handling materials.

SECTION 25

EXCAVATIONS

25.A GENERAL

25.A.01 Planning.

a. Prior to opening an excavation, underground installations (e.g., sewer, communication lines, water, fuel, electric lines) shall be located and protected from damage or displacement. Utility companies and other responsible authorities shall be contacted to locate and mark the locations and, if they so desire, direct or assist with protecting the underground installations. When required, the Contractor shall obtain a "Digging Permit" (excavation permit) from Base Civil Engineers or other authority having jurisdiction prior the initiation of any excavation work. Requests for the permits will be processed through the GDA.

b. Where excavations are to be performed in areas known or suspected to be contaminated with explosives, unexploded munitions, or military ordnance, surface and subsurface clearance by qualified explosive ordnance disposal (EOD) personnel shall be accomplished prior to excavation work.

25.A.02 Excavation inspection and testing.

a. When persons will be in or around an excavation, a competent person shall inspect the excavation, the adjacent areas, and protective systems daily, as needed throughout the work shifts, and after every rainstorm or other hazard-increasing occurrence.

b. If evidence of a situation that could result in possible cave-ins, slides, failure of protective systems, hazardous atmospheres, or other hazardous condition is identified, exposed workers shall be removed from the hazard and all work

in the excavation stopped until all necessary safety precautions have been implemented.

c. In locations where oxygen deficiency or gaseous conditions are known or suspected, air in the excavation shall be tested prior to the start of each shift or more often if directed by the GDA. A log of all test results shall be maintained at the work site. ***> See Sections 5 and 6.***

25.A.03 Protective systems.

a. The sides of all excavations in which employees are exposed to danger from moving ground shall be guarded by a support system, sloping or benching of the ground, or other equivalent means.

b. Excavations less than 5 ft (1.5 m) in depth and which a competent person examines and determines there to be no potential for cave-in do not require protective systems.

c. Sloping or benching of the ground shall be in accordance with 25.C.

d. Support systems shall be in accordance with 25.D.

e. Protective systems shall have the capacity to resist without failure all loads that are intended or could reasonably be expected to be applied to the system.

f. Shoring shall be used for unstable soil or depths >5 ft (>1.5 m) unless benching, lay-back, or other acceptable plan is implemented by the Contractor.

25.A.04 Stability of adjacent structures.

a. Except in stable rock, excavations below the level of the base of footing of any foundation or retaining wall shall not be permitted unless:

(1) A support system, such as underpinning, is provided to ensure the stability of the structure and to protect employees involved in the excavation work or in the vicinity thereof; or

(2) A registered professional engineer has approved the determination that the structure is sufficiently removed from the excavation so as to be unaffected by the excavation and that the excavation will not pose a hazard to employees.

b. If the stability of adjoining buildings or walls is endangered by excavations, shoring, bracing, or underpinning designed by a qualified person shall be provided to ensure the stability of the structure and to protect employees.

c. Sidewalks, pavements, and related structures shall not be undermined unless a support system is provided to protect employees and the sidewalk, pavement, or related structure.

25.A.05 Where it is necessary to undercut the side of an excavation, overhanging material shall be safely supported.

25.A.06 Protection from water.

a. Diversion ditches, dikes, or other means shall be used to prevent surface water entering an excavation and to provide good drainage of the area adjacent to the excavation.

b. Employees shall not work in excavations in which there is accumulated water or in which water is accumulating unless the water hazards posed by accumulation is controlled.

(1) Freezing, pumping, drainage, and similar control measures shall be planned and directed by a registered engineer. Consideration shall be given to the existing moisture balances in surrounding soils and the effects on foundations and structures if it is disturbed.

(2) When continuous operation of ground water control equipment is necessary, an emergency power source shall

be provided. Water control equipment and operations shall be monitored by a competent person to ensure proper operation.

25.A.07 Protection from falling material.

a. Employees shall be protected (by scaling, ice removal, benching, barricading, rock bolting, wire mesh, or other means) from loose rock or soil that could create a hazard by falling from the excavation wall: special attention shall be given to slopes that may be adversely affected by weather, moisture content, or vibration.

b. Materials, such as boulders or stumps, that may slide or roll into the excavation shall be removed or made safe.

c. Excavated material shall be placed at least 2 ft (0.6 m) from the edge of an excavation or shall be retained by devices that are sufficient to prevent the materials from falling into the excavation. In any case, material shall be placed at a distance to prevent excessive loading on the face of the excavation.

25.A.08 Mobile equipment and motor vehicle precautions.

a. When vehicles or mobile equipment are used or allowed adjacent to an excavation, substantial stop logs or barricades shall be installed. The use of a ground guide is recommended.

b. Workers shall stand away from vehicles being loaded or unloaded to avoid being struck by spillage or falling materials.

c. Excavating or hoisting equipment shall not be allowed to raise, lower, or swing loads over personnel in the excavation without substantial overhead protection.

25.A.09 Employees shall not be permitted to work on the faces of sloped or benched excavations at levels above other employees except when employees at lower levels are adequately protected from the hazard of falling material or equipment.

25.A.10 When operations approach the location of underground utilities, excavation shall progress with caution until the exact location of the utility is determined. Workers shall be protected from the utility and the utility shall be protected from damage or displacement.

25.A.11 Employees shall wear a harness with a lifeline securely attached to it when entering excavations classified as confined spaces or that otherwise present the potential for emergency rescue. ***> See 5.F.***

25.B SAFE ACCESS

25.B.01 Protection shall be provided to prevent personnel, vehicles, and equipment from falling into excavations. Protection shall be provided according to the following hierarchy. ***> See Appendix Q for definitions of Class I, Class II, and Class III perimeter protection.***

a. If the excavation is exposed to members of the public (e.g., other than those individuals engaged in project-specific work at the site) or vehicles or equipment, then Class I perimeter protection is required;

b. If the excavation does not meet the requirements for Class I perimeter protection but is (1) routinely exposed to employees, and (2) either is deeper than 6 ft (1.8 m) or contains hazards (e.g., impalement hazards, hazardous substances), then Class II perimeter protection is the minimum protection required. When workers are in the zone between the warning barricades/ flagging and the excavation, they shall be provided with fall protection as specified in Section 21;

c. If the excavation does not meet the requirements for either Class I or Class II perimeter protection, then Class III perimeter protection is the minimum protection required.

25.B.02 All wells, calyx holes, pits, shafts, etc., shall be barricaded or covered.

25.B.03 Excavations shall be backfilled as soon as possible. Upon completion of exploration and similar operations, test pits, temporary wells, calyx holes, etc., shall be backfilled immediately.

25.B.04 Walkways or bridges with standard guardrails shall be provided where people or equipment are required or permitted to cross over excavations.

25.B.05 Where personnel are required to enter excavations over 4 ft (1.2 m) in depth, sufficient stairs, ramps, or ladders shall be provided to require no more than 25 ft (7.6 m) of lateral travel.

a. At least two means of exit shall be provided for personnel working in excavations. Where the width of the excavation exceeds 100 ft (30.4 m), two or more means of exit shall be provided on each side of the excavation.

b. When access to excavations in excess of 20 ft (6 m) in depth is required, ramps, stairs, or mechanical personnel hoists shall be provided.

25.B.06 Ramps. ***> See 21.B and 21.F***

a. Ramps used solely for personnel access shall be a minimum width of 4 ft (1.2 m) and provided with standard guardrails.

b. Ramps used for equipment access shall be a minimum width of 12 ft (3.6 m). Curbs not less than 8-in x 8-in (20.3-cm x 20.3-cm) timbers, or equivalent protection, shall be provided. Equipment ramps shall be designed and constructed in accordance with accepted engineering practice.

25.B.07 Ladders used as accessways shall extend from the bottom of the excavation to not less than 3 ft (0.9 m) above the surface.

25.C SLOPING AND BENCHING

25.C.01 Sloping or benching of the ground shall be in accordance with one of the systems outlined in a through c below:
> See Figure 25-1 for Examples from 29 CFR 1926, Subpart P, Appendix B.

a. For excavations less than 20 ft (6 m) in height, the maximum slope shall be 34° measured from the horizontal (1-1/2 horizontal to 1 vertical).

b. The design shall be selected from and be in accordance with written tabulated data, such as charts and tables. At least one copy of the tabulated data shall be maintained at the job site during excavation. The tabulated data shall include:

(1) Identification of the parameters that affect the selection of a sloping or benching system drawn from the data,

(2) Identification of the limits of use of the data, to include the magnitude and configuration of slopes determined to be safe,

(3) Explanatory information as may be necessary to aid the user in correctly selecting a protective system from the data, and

(4) The identity of the registered professional engineer who approved the data.

c. The sloping or benching system shall be designed by a registered engineer. At least one copy of the design shall be maintained at the job site during excavation. Designs shall be in writing and include:

(1) The magnitudes and configurations of the slopes that were determined to be safe for the particular excavation, and

(2) The identity of the registered engineer who approved the design.

25.D SUPPORT SYSTEMS

25.D.01 Support systems shall be in accordance with one of the systems outlined in a through c below:

a. Designs drawn from manufacturer's tabulated data shall be in accordance with all specifications, limitations, and recommendations issued or made by the manufacturer.

(1) Deviation from the specifications, recommendations, and limitations are only allowed after the manufacturer issues specific written approval.

(2) A copy of the manufacturer's specifications, recommendations, and limitations (and the manufacturer's approval to deviate from these, if required) shall be in written form and maintained at the job site during excavation.

b. Designs shall be selected from and be in accordance with tabulated data (such as tables and charts). At least one copy of the tabulated data shall be maintained at the job site during excavation. The tabulated data shall include:

(1) Identification of the parameters that affect the selection of the protective system drawn from such data,

(2) Identification of the limits of use of the data, and

(3) Explanatory information as may be necessary to aid the user in correctly selecting a protective system from the data, and

(4) The identity of the registered professional engineer who approved the data.

c. Designed by a registered engineer. At least one copy of the design shall be maintained at the job site during excavation. Designs shall be in writing and include:

(1) A plan indicating the sizes, types, and configurations of the materials to be used in the protective system, and

(2) The identity of the registered engineer who approved the design.

25.D.02 Materials and equipment used for protective systems.

a. Materials and equipment shall be free from damage or defects that might impair their proper function.

b. Manufactured materials and equipment shall be used and maintained in a manner consistent with the recommendations of the manufacturer and in a manner that will prevent employee exposure to hazards.

c. When material or equipment is damaged, a competent person shall examine the material or equipment and evaluate its suitability for continued use.

25.D.03 Installation and removal of support systems. ***> See Examples of Support Systems at Figures 25-2 and 25-3.***

a. Members of support systems shall be securely connected together to prevent sliding, falling, kickouts, or other predictable failure.

b. Support systems shall be installed and removed in manners that protect employees from cave-ins, structural collapses, or from being struck by members of the support system.

c. Individual members of a support system shall not be subjected to loads exceeding those for which they were designed to withstand.

d. Before temporary removal of individual members, additional precautions shall be taken to ensure the safety of employees, such as installing other structural members to carry the loads imposed on the support system.

e. Removal shall begin at and progress from the bottom of the excavation. Members shall be released slowly as to note any indication of possible failure of the remaining members or possible cave-in of the sides of the excavation.

f. Backfilling shall progress together with the removal of support systems from excavations.

25.D.04 Shield systems.

a. Shields shall be installed in a manner to restrict lateral or other hazardous movement of the shield in the event of the application of sudden lateral loads.

b. Employees shall be protected from the hazard of cave-ins when entering or exiting the area protected by shields.

c. Employees shall not be allowed in shields when shields are being installed, removed, or moved vertically.

25.D.05 Additional requirements for trenching.

a. Installation of support systems shall be closely coordinated with excavations of trenches.

b. Bracing or shoring of trenches shall be carried along with the excavation.

c. Backfilling and removal of trench supports should progress together from the bottom of the trench. Jacks or braces shall be released slowly and, in unstable soil, ropes shall be used to pull out the jacks or braces from above after personnel have cleared the trench. ***> See Examples of Jacks at Figure 25-3.***

d. Excavation of material to a level no greater than 2 ft (0.6 m) below the bottom of the members of a trench support system (including a shield) shall be permitted, but only if the system is designed to resist the forces calculated for the full depth of the trench and there are no indications while the trench is open of a possible loss of soil from behind or below the bottom of the support system.

25.E COFFERDAMS

25.E.01 If overtopping of the cofferdams by high water is possible, design shall include provisions for controlled flooding of the work area.

25.E.02 If personnel or equipment are required or permitted on cofferdams, standard railings, or equivalent protection, shall be provided.

25.E.03 At least two means of access shall be provided for personnel and equipment working on cofferdams.

25.E.04 A plan (including warning signals) for evacuation of personnel and equipment in case of emergency and for controlled flooding shall be developed and posted.

25.E.05 Cofferdams located close to navigable shipping channels shall be protected from vessels in transit.

FIGURE 25-1

SLOPING AND BENCHING

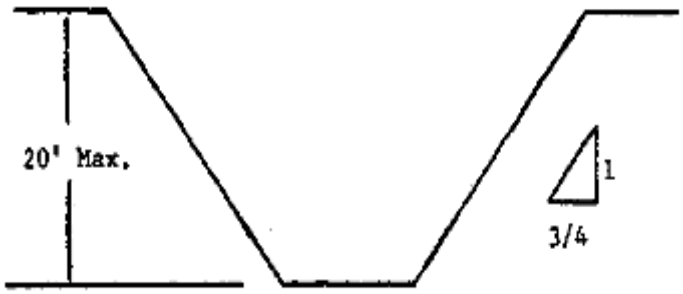

SIMPLE SLOPE - GENERAL - TYPE A SOIL

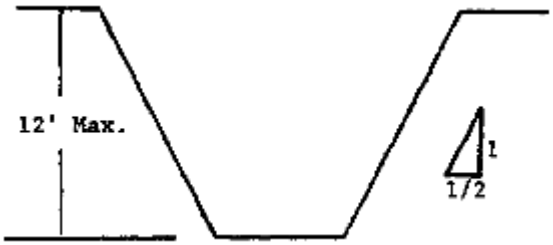

SIMPLE SLOPE - SHORT TERM - TYPE A SOIL

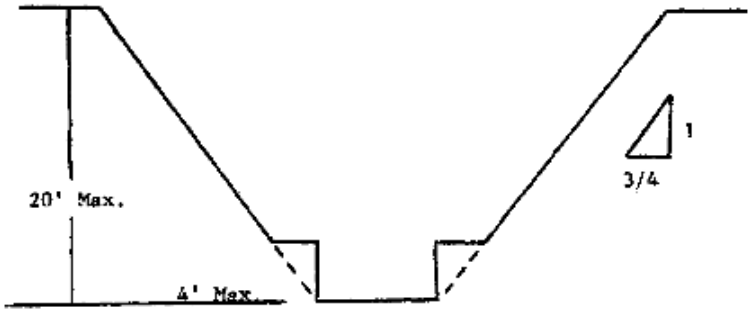

SIMPLE BENCH - TYPE A SOIL

FIGURE 25-1 (CONTINUED)

SLOPING AND BENCHING

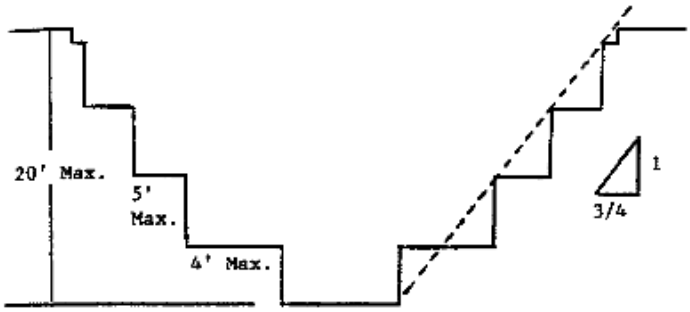

MULTIPLE BENCH - TYPE A SOIL

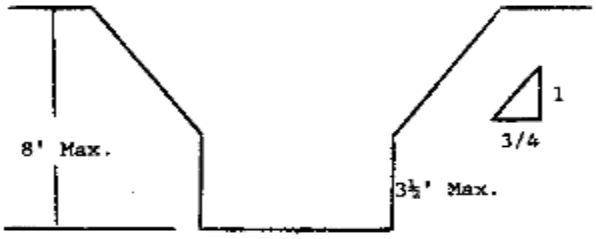

UNSUPPORTED VERTICALLY SIDED LOWER PORTION - MAXIMUM 8 FEET IN DEPTH - TYPE A SOIL

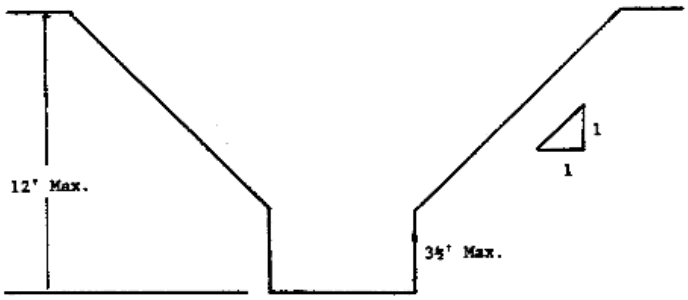

UNSUPPORTED VERTICALLY SIDED LOWER PORTION - MAXIMUM 12 FEET IN DEPTH) - TYPE A SOIL

FIGURE 25-1 (CONTINUED)

SLOPING AND BENCHING

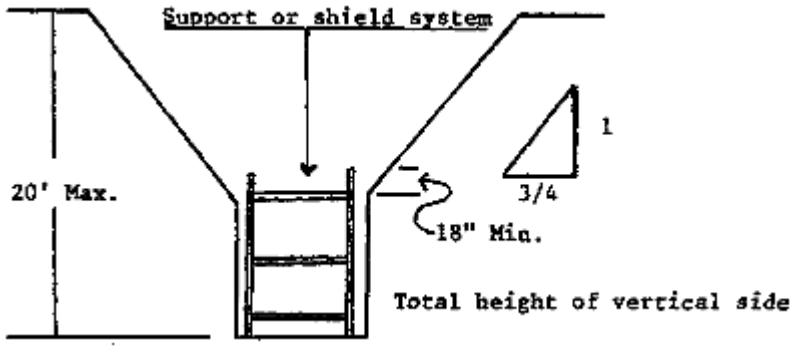

SUPPORTED OR SHIELDED VERTICALLY SIDED LOWER PORTION) - TYPE A SOIL

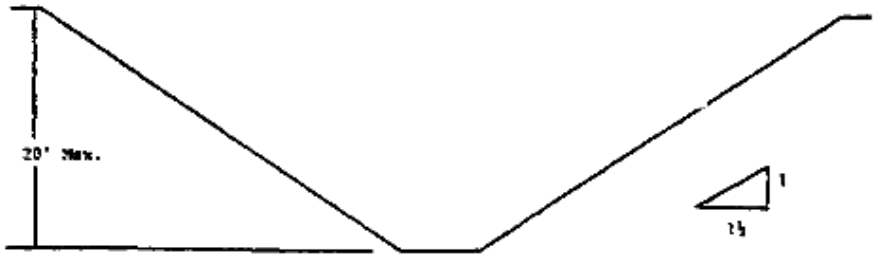

SIMPLE SLOPE - TYPE C SOIL

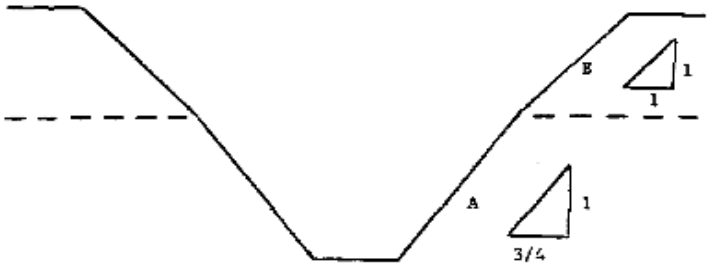

EXCAVATIONS MADE IN LAYERED SOILS - B OVER A

FIGURE 25-1 (CONTINUED)

SLOPING AND BENCHING

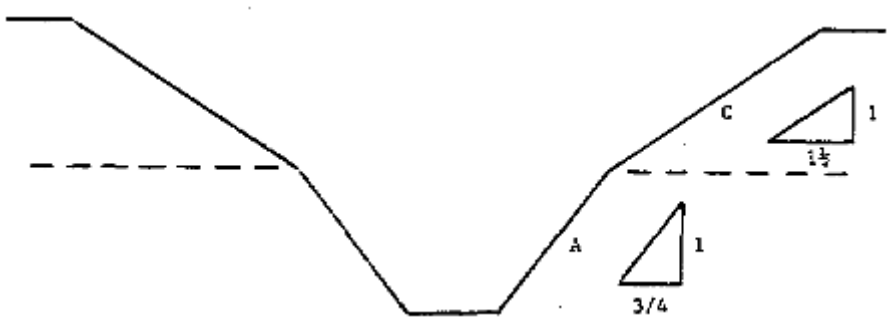

EXCAVATIONS MADE IN LAYERED SOILS - C OVER A

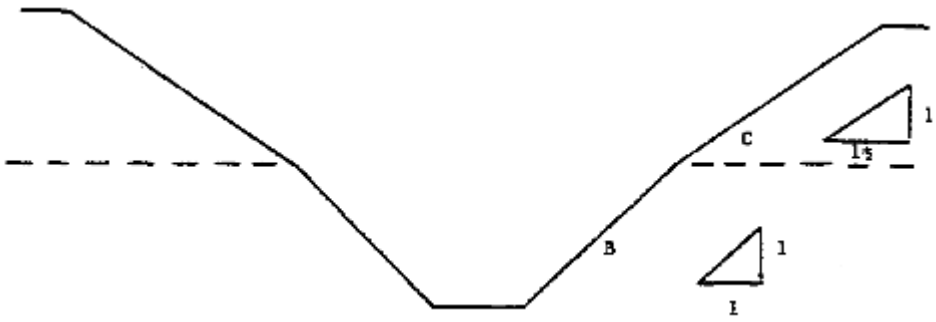

EXCAVATIONS MADE IN LAYERED SOILS - C OVER B

FIGURE 25-2

TRENCH SHIELDS

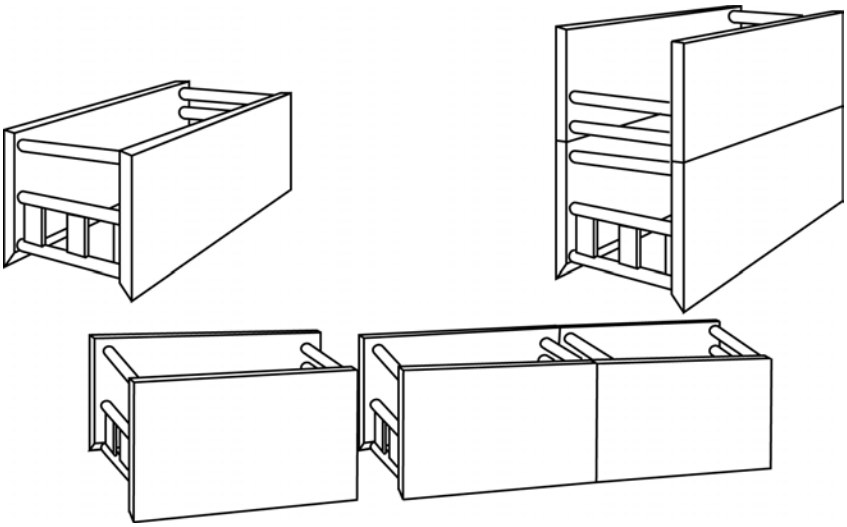

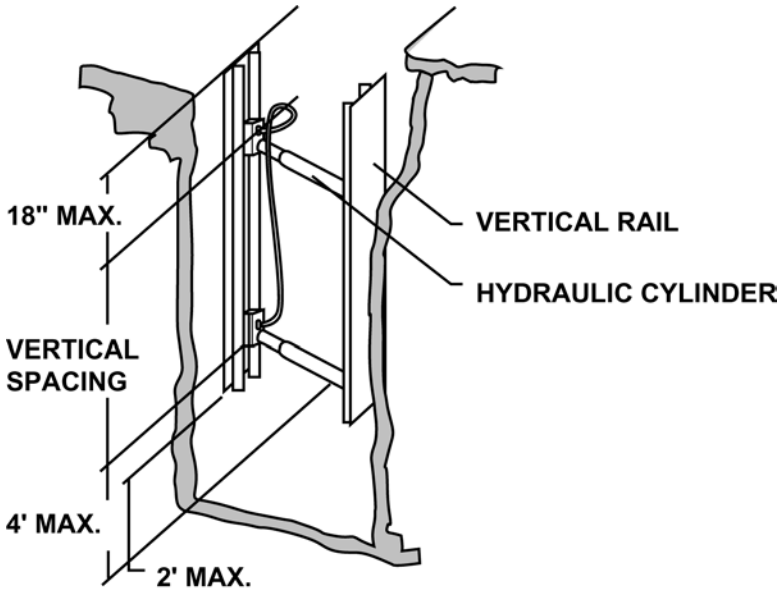

Aluminum Hydraulic Shoring

FIGURE 25-3

TRENCH JACKS

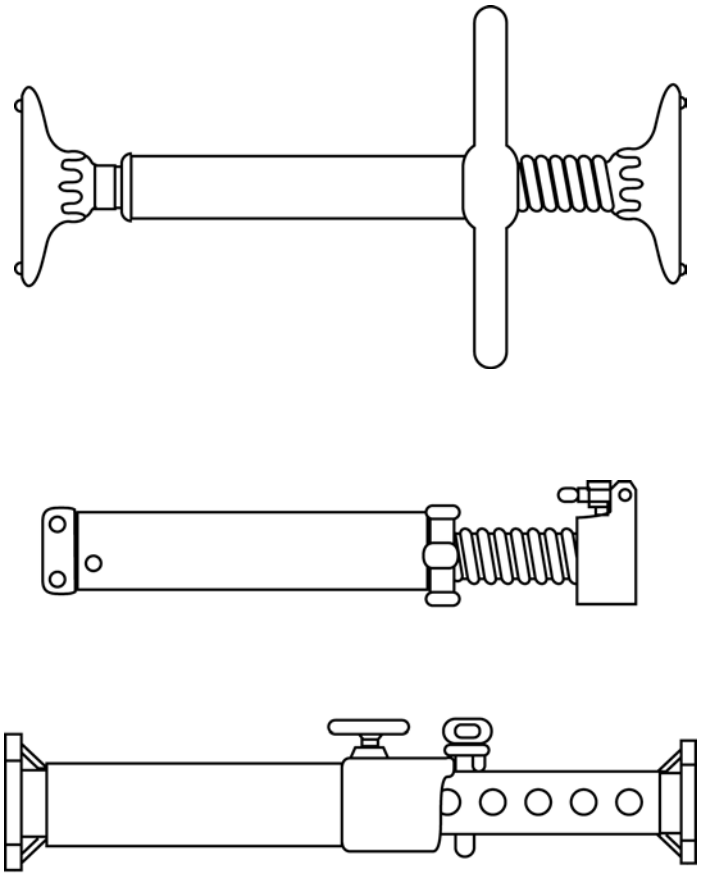

Pneumatic/hydraulic Shoring

SECTION 26

UNDERGROUND CONSTRUCTION (TUNNELS), SHAFTS, AND CAISSONS

26. GENERAL

26.A.01 Access.

a. Access to all underground openings shall be controlled to prevent unauthorized entry.

b. Unused accessways or other openings shall be tightly covered or fenced off and shall be posted with warning signs indicating "**KEEP OUT**" or similar language.

c. Completed or unused sections of underground structures shall be barricaded.

d. See 6.I of this manual for confined space requirements.

26.A.02 Every location of underground construction shall have a check-in/check-out system that will ensure that above-ground personnel can determine the identification of all underground personnel.

26.A.03 Oncoming shifts shall be informed of any hazardous occurrences or conditions that have affected or might affect employee safety, including liberation of gas, equipment failures, earth or rock slides, cave-ins, flooding, fires, or explosions.

26.A.04 Communications.

a. In situations where unassisted voice communication is inadequate, power-assisted means shall be used to provide communication among workers and support personnel.

b. At least two effective means of communication (at least one of which shall be voice communication) shall be provided in all shafts that are being developed or used either for personnel access or for hoisting.

c. Powered communication systems shall operate on an independent power supply and shall be installed so that the use of or disruption of any one phone or signal location will not disrupt the operation of the system from any other location.

d. Communication systems shall be tested upon initial entry of each shift to the underground and as often as necessary thereafter to ensure proper operation.

e. Any employee working alone underground, who is both out of range of natural unassisted voice communication and not under observation by other persons, shall be provided with effective means to communicate the need for and to obtain emergency assistance. Employees working alone shall be required to check in with their supervisor at least once an hour.

26.A.05 Emergency rescue plans and equipment.

a. Plans for rescuing personnel who might become injured or incapacitated while underground or in a shaft or caisson shall be developed.

(1) Plans shall be incorporated in either the APP or the AHA and posted at the job site.

(2) Plans shall be periodically reviewed with all affected personnel so that they maintain a working knowledge of emergency responsibilities and procedures.

(3) Emergency plans shall be drilled on a periodic basis to ensure their efficacy.

b. Emergency equipment specified in the emergency plan shall be provided within 15 minutes of each portal or shaft entry.

Inspections and workability tests of the equipment shall be made and documented monthly.

c. When a shaft is used as a means of egress, arrangements shall be made for power-assisted hoisting capability to be readily available in an emergency, unless the regular hoisting means can continue to function during a power failure.

d. Hoisting devices used for emergencies shall be designed so that the load hoist drum is powered in both directions of rotation and so that the brake is automatically applied upon power release or failure.

e. Self-rescuing/emergency respirators with current approval from NIOSH and MSHA shall be immediately available to all employees at workstations in underground areas where they may be trapped by smoke or gas. ***> See 5.E.***

f. At least one designated person shall be on duty above ground whenever personnel are underground.

(1) The designated person shall be responsible for keeping an accurate count of employees underground and securing immediate aid in case of emergency.

(2) The designated person shall not be given other responsibilities that could affect his/her emergency response duties.

g. Each worker underground shall have an acceptable portable hand lamp or cap lamp in his/her work area for emergency use, unless natural light or an emergency lighting system provides adequate illumination for escape.

26.A.06 Rescue teams.

a. On job sites where less than 25 persons are underground at one time, provisions shall be made for at least one five-person rescue team to be either on the job site or within 30-minutes

travel time from the underground entry point. This rescue team may be provided by local emergency response services.

b. On job sites where 25 or more persons are underground at one time, provisions shall be made for at least two five-person rescue teams. One rescue team shall be on the job site or be within 30-minutes travel time from the underground entry point, and the other rescue team shall be within 2-hours travel time. These rescue teams may be provided by local emergency response services.

c. Rescue team members shall be qualified in rescue procedures, the use and limitations of breathing apparatus, and the use of firefighting equipment.

d. On job sites where flammable or noxious gases are encountered or anticipated in hazardous quantities, rescue team members shall practice donning and using SCBA monthly.

e. Rescue teams shall be kept informed of conditions at the job site with may impact their response.

26.A.07 In addition to the requirements of Section 5, personnel in wet underground areas shall wear rubber boots and rain gear.

26.A.08 First-aid facilities.

a. A fully equipped first-aid station and emergency transportation shall be provided at each underground construction project regardless of the number of persons employed.

b. If an underground construction project has multiple portals a first-aid station(s) shall be provided at each portal or entry shaft or shall be so located between them that the distance from the station to each portal/entry shaft is less than 5 mi (8 km) and travel time less than 15 minutes.

26.A.09 Electrical and lighting.

a. All electrical systems used in hazardous locations must be approved for that location. ***> See 11.G.***

b. Lighting circuits shall be installed on one side of the tunnel near the spring line and shall be mounted on insulators at each point of suspension.

c. Light fixtures shall be nonmetallic and weatherproof and mounted in a manner that provides safe clearance for personnel and equipment.

d. Only portable lighting equipment that is approved for the hazardous location shall be used within:

(1) Storage areas, or

(2) 50 ft (15.2 m) of any underground heading during explosives handling.

26.A.10 Inspections and testing.

a. A program for testing all rock bolts for tightness shall be established. The frequency of testing shall be determined by rock conditions and the distance from vibration sources.

b. The employer shall examine and test the roof, face, and walls of the work area at the start of each shift and frequently thereafter.

c. Ground conditions along underground haulways and accessways shall be inspected as frequently as necessary to maintain safe passage.

d. All drilling and associated equipment to be used during a shift shall be inspected before each shift by a competent person.

e. Drilling areas shall be inspected for hazards before drilling operations are started.

f. A competent person shall inspect haulage equipment before each shift.

g. Whenever defects affecting safety or health are identified, the defects shall be corrected before activities are initiated or continued.

26.A.11 Protection from falling material.

a. Portal openings and access areas shall be guarded by shoring, fencing, head walls, shotcreting, or other equivalent means to ensure safe access of employees and equipment. Adjacent areas shall be scaled or otherwise secured to prevent loose soil or rock from endangering the portal and access areas.

b. Ground stability in hazardous subsidence areas shall be ensured by shoring or filling in, or by erecting barricades and posting warning signs to prevent entry.

c. Loose ground in underground areas that might be hazardous to employees shall be taken down, scaled, or supported.

d. Rock masses separated from the main mass by faults, joints, or fractures shall be secured by rock bolting or other suitable means or shall be removed. The means of securing shall be designed by a foundation engineer, an engineering geologist, or other qualified person.

e. Anchored chain-link fabric or other method approved by the GDA shall be provided on rock faces subject to spalling.

f. Where tunnels are excavated through earth or shale, any excavation above or adjacent to portal areas shall be sloped to the angle of repose or held in place by ground supports. When undercutting occurs on these slopes (whether due to erosion or

other causes) the overhanging material shall be promptly removed.

g. Where the need is indicated, a protective shelter shall be provided at each underground portal to protect persons and equipment from the hazards of falling rock or other material. The protective shelter shall project at least 15 ft (4.5 m) out from the portal.

h. Ice or snow buildup on rock faces or earth slopes that create a hazard shall be promptly removed.

26.A.12 Tunneling in soil.

a. Where tunnels are excavated by conventional methods, the excavation shall not be extended more than 24 in (60.9 cm) ahead of ground supports; where continuous mining machines are used for tunnel excavation, the excavation shall not be extended more than 48 in (121.9 cm) ahead of ground supports.

b. Under no circumstances shall persons be permitted to work in unsupported sections of the tunnels.

c. All voids in back of ground supports shall be filled, blocked, braced, or treated to prevent further cave-ins.

d. Where liner plate is not used for tunnel support, 2-in (5-cm) wire mesh or chain-link fabric shall be installed over the crown section, extending down to the spring line on each side of the tunnel and secured in place.

26.A.13 Ground support systems.

a. Torque meters and/or torque wrenches shall be used where rock bolts are used for ground support.

b. Frequent tests shall be made to determine if bolts meet the required torque. The test frequency shall be determined by rock conditions and distance from vibration sources.

c. Rock bolt support systems shall be designed by a foundation engineer, a geologist, or other qualified person. Suitable protection shall be provided for employees exposed to the hazard of loose ground while installing ground support systems.

d. Support sets shall be installed so that the bottoms have sufficient anchorage to prevent ground pressures from dislodging the support base of the sets. Lateral bracing shall be provided between immediately adjacent sets to provide added stability.

e. Damaged or dislodged ground supports shall be repaired or replaced. Whenever possible, new supports shall be installed before removing the damaged supports.

f. A shield or other type of support shall be used to maintain a safe travelway for personnel working in dead-end areas ahead of any support replacement operation.

26.A.14 Material handling equipment.

a. Powered mobile haulage equipment shall have audible warning devices to inform personnel to stay clear. The operator shall sound the warning device before moving the equipment and whenever necessary during travel.

b. All vehicles and mobile equipment required to move in and out of underground construction areas shall have a revolving, flashing amber light, mounted so as to be visible in all directions. The flashing light shall be on whenever a vehicle or mobile equipment is in operation.

c. Haulage equipment shall be equipped with two headlights at both ends, a backup light, and an automatic backup alarm.

d. Conveyors used to transport muck from tunnels shall be installed, guarded, and maintained as required by Section 17. Fire extinguishers or equivalent protection shall be provided at the head and tail pulleys of underground belt conveyors and at 300-ft (91.4-m) intervals along the belt line.

e. No person shall ride haulage equipment unless it is equipped with seating for each passenger and passengers are protected from being struck, crushed, or caught between other equipment or surfaces.

f. When dumping cars by hand, the car dumps shall be provided with tie-down chains or bumper blocks to prevent cars from overturning.

g. Where narrow-gage railroads are used for haulage, the tracks shall be secured to prevent shifting. No "humping" of mine dump cars shall be permitted.

h. Whenever rails serve as a return for a trolley circuit, both rails shall be bonded at every joint and cross-bonded every 200 ft (60.9 m).

i. Mine dump cars shall be equipped with automatic safety couplings, and cradle cars shall be equipped with a positive locking device to prevent accidental dumping.

j. Berms, bumper blocks, safety hooks, or equivalent means shall be provided to prevent overtravel and overturning of haulage equipment at dumping locations.

k. Bumper blocks or equivalent shall be provided at all track dead ends.

26.A.15 Vehicles not directly involved in work shall be kept away from portals and separated from construction activities.

26.A.16 A caution sign reading "**BURIED LINE**" (or similar wording) shall be posted where air lines are buried or otherwise hidden by water or debris.

26.A.17 Where underground openings are located adjacent to sources of water with potential for causing flooding in the underground work area, measures shall be taken to ensure that the underground area cannot be flooded.

26.B HAZARDOUS CLASSIFICATIONS

26.B.01 Underground construction operations shall be classified in accordance with the following.

a. Underground construction operations shall be classified as potentially gassy operations if either:

(1) Air monitoring discloses 10% or more of the lower explosive limit for methane or other flammable gases measured at 12 in +/- 0.25 in (30.4 cm +/- 0.6 cm) from the roof, face, floor, or walls for a period of more than 24 hours; or

(2) The history of the geological area or geological formation indicates that 10% or more of the lower explosive limit for methane or other flammable gas is likely to be encountered.

b. Underground operations shall be classified as gassy operations if:

(1) Air monitoring discloses 10% or more of the lower explosive limit for methane or other flammable gases measured at 12 in +/- 0.25 in (30.4 cm +/- 0.6 cm) from the roof, face, floor, or walls for three consecutive days; or

(2) There has been an ignition of methane or other flammable gases emanating from the strata that indicates the presence of such gases; or

(3) The underground construction operation is both connected to an underground work area that is currently classified as gassy and is also subject to a continuous course of air containing the flammable gas concentration.

26.B.02 Underground construction gassy operations may be downgraded to potentially gassy operations when air monitoring results remain under 10% of the lower explosive limit for methane or other flammable gases for 3 consecutive days.

26.B.03 Requirements for gassy operations.

a. Only equipment approved for the hazardous location and maintained in suitable condition shall be used in gassy operations.

b. Mobile diesel-powered equipment used in gassy operations shall be approved in accordance with the requirements of 30 CFR 36 by MSHA and State regulations and shall be operated in accordance with these requirements and the manufacturer's instructions.

c. Each entrance to a gassy operation shall be prominently posted with signs notifying all entrants of the gassy classification.

d. Smoking shall be prohibited in all gassy operations and the employer shall be responsible for collecting all personal sources of ignition, such as matches and lighters, from all persons entering a gassy operation.

e. A fire watch shall be maintained when hot work is performed.

f. Once an operation has been classified as gassy, all activities in the affected area (except those in (1) through (3), below) shall be discontinued until the operation either is in compliance with all gassy operation requirements or has been downgraded to potentially gassy:

(1) Activities related to the control of the gas concentration;

(2) Installation of new equipment, or conversion of existing equipment, to comply with subparagraph (1), above; and

(3) Installation of above-ground controls for reversing the air flow.

26.C AIR MONITORING, AIR QUALITY STANDARDS, AND VENTILATION

26.C.01 Air monitoring requirements.

a. Air monitoring devices shall be inspected, calibrated, maintained, and used in accordance with the manufacturer's instructions. Back-up monitoring devices shall be maintained in calibrated and working condition at the worksite. ***> See 6.A.***

b. When air monitoring is required "as often as necessary," the competent person shall determine which substances to monitor and how frequently to monitor. Such determination shall be based on:

(1) The location of the job site and proximity to fuel tanks, sewers, gas lines, old landfills, coal deposits, and swamps;

(2) The geology of the job site, particularly the soil types and their permeability;

(3) Any history of air contaminants in nearby job sites or any changes in air quality monitored during a previous shift; and

(4) Work practices and job site conditions (use of diesel engines, explosives, or fuel gas, ventilation characteristics, visible atmospheric conditions, decompression of the atmosphere, welding, cutting, or hot work, etc.).

c. A record (including location, date, time, substance, monitoring results, and name of person conducting the test) of all air quality tests shall be maintained at the job site.

d. The atmosphere in all underground work areas shall be tested as often as necessary to assure that the atmosphere at normal atmospheric pressure contains at least 19.5% oxygen and no more than 22% oxygen.

e. The atmosphere in all underground work areas shall be tested quantitatively for CO, nitrogen dioxide, hydrogen sulfide, and other toxic gases, dusts, vapors, mists, and fumes as often as necessary to ensure that the PEL are not exceeded.

f. The atmosphere in all underground work areas shall be tested quantitatively for methane and other flammable gases as often as necessary to determine whether action is to be taken under 26.C.02f-h and to determine whether an operation is to be classified gassy or potentially gassy under 26.B.01.

g. The atmosphere in all underground work areas shall be tested as often as necessary to ensure that the ventilation requirements of 26.C.03-05 are met.

h. If diesel-engine or gasoline-engine driven ventilating fans or compressors are used, an initial test shall be made of the inlet air of the fan or compressor, with the engine operating, to ensure that the air supply is not contaminated by engine exhaust.

i. When rapid excavation machines are used, a continuous flammable gas monitor shall be operated at the face with the sensor(s) placed as high and close to the front of the machine's cutter head as possible.

j. Operations that meet the criteria for potentially gassy or gassy operations shall be subjected to the following monitoring:

(1) Tests for oxygen content shall be conducted in all affected work areas and work areas immediately adjacent to such areas at least at the beginning and midpoint of each shift;

(2) When using rapid excavation machines, continuous automatic flammable gas monitoring equipment shall be used to monitor the air at the heading, on the rib, and in the return air duct. The continuous monitor shall signal the heading and shut down electric power in the affected underground work area, except for acceptable pumping and ventilation equipment, when 20% or more of the lower explosive limit for methane or other flammable gases is encountered.

(3) A manual flammable gas monitor shall be used as needed, but at least at the beginning and midpoint of each shift, to ensure that the limits prescribed in 26.B 01 and 26.C.01d and f are not exceeded. In addition, a manual electrical shut down control shall be provided near the heading.

(4) Local gas tests shall be made prior to and continuously during any welding, cutting, or other hot work.

(5) In underground operations driven by drill-and-blast methods, the air in the affected area shall be tested for flammable gas prior to re-entry after blasting and continuously when employees are working underground.

26.C.02 Air quality standards.

a. Whenever air monitoring indicates the presence of 5 ppm or more of hydrogen sulfide, a test shall be conducted in the affected underground work areas, at least at the beginning and midpoint of each shift, until the concentration of hydrogen sulfide has been less than 5 ppm for 3 consecutive days.

b. Whenever hydrogen sulfide is detected in an amount exceeding 10 ppm, a continuous sampling and indicating hydrogen sulfide monitor shall be used to monitor the affected work areas.

c. Employees shall be informed when a concentration of 10 ppm hydrogen sulfide is exceeded.

d. The continuous sampling and indicating hydrogen sulfide monitor shall be designed, installed, and maintained to provide a visual and aural alarm when the hydrogen sulfide concentration reaches 10 ppm to signal that additional measures might be necessary to maintain hydrogen sulfide exposure below the PEL.

e. When the competent person determines, on the basis of air monitoring results or other information, that air contaminants may be present in sufficient quantities to be dangerous to life, the employer shall:

(1) Prominently post a notice at all entrances to the underground area to inform all entrants of the hazardous condition, and

(2) Ensure that the necessary precautions are taken.

f. Whenever 5% or more of the lower explosive limit for methane or other flammable gases is detected in any underground work area or in the air return, steps shall be taken to increase ventilation air volume or otherwise control the gas concentration, unless operations are conducted in accordance with the potentially gassy or gassy operation requirements: such additional ventilation controls may be discontinued when gas concentrations are reduced below 5% of the lower explosive limit.

g. Whenever 10% or more of the lower explosive limit for methane or other flammable gases is detected in the vicinity of welding, cutting, or other hot work, such work shall be

suspended until the concentration of such flammable gas is reduced to less than 10% of the lower explosive limit.

h. Whenever 20% or more of the lower explosive limit for methane or other flammable gases is detected in any underground work area or in the return:

(1) All employees, except those necessary to eliminate the hazard, shall be immediately withdrawn to a safe location above ground; and

(2) Electrical power, except for acceptable pumping and ventilation equipment, shall be cut off to the area endangered by the flammable gas until the concentration of such gas is reduced to less than 20% of the lower explosive limit.

i. When ventilation has been reduced to the extent that hazardous levels of methane or other flammable gas may have accumulated, all affected areas shall be tested after ventilation has been restored and before any power, other than for acceptable equipment, is restored or work is resumed and shall determine whether the atmosphere is within flammable limits.

j. Whenever the ventilation system has been shut down with all employees out of the underground area, only competent persons authorized to test for air contaminants shall be allowed underground until the ventilation has been restored and all affected areas have been tested for air contaminants and declared safe.

26.C.03 Ventilation.

a. Fresh air shall be supplied to all underground work areas in sufficient quantities to prevent dangerous accumulation of dusts, fumes, mists, gases, or vapors.

b. Mechanical ventilation shall be provided in all underground work areas except where it is demonstrated that natural

ventilation provides the necessary air quality through sufficient air volume and airflow.

(1) Ventilation and exhaust systems for tunnel excavation shall be of sufficient capacity to maintain an adequate supply of uncontaminated air at all points in the tunnel.

(2) The supply of fresh air shall not be less than 200 cfm (94.4 liters per second(L/s)) for each employee underground plus that necessary to operate the equipment.

(3) The linear velocity of air flow in all underground work areas shall be at least 30 ft/min (0.15 m/s) where blasting or rock drilling is conducted or where there are other conditions likely to produce dusts, fumes, vapors, or gases in harmful quantities.

(4) The direction of mechanical airflow shall be reversible.

(5) Ventilation doors shall be designed and installed so that they remain closed when in use, regardless of the direction of airflow.

c. Following blasting, ventilation systems shall exhaust smoke and fumes to the outside atmosphere before work is resumed in affected areas.

d. Potentially gassy or gassy operations shall have ventilation systems installed which are constructed of fire-resistant materials and have acceptable electrical systems, including fan motors.

e. Gassy operations shall be conducted with controls for reversing the airflow of ventilation systems located above ground.

f. In potentially gassy or gassy operations, wherever mine-type ventilation systems using an offset main fan installed on the surface are used, they shall be equipped with explosion-doors

or a weak-wall having an area at least equivalent to the cross sectional area of the airway.

g. Air that has passed through underground oil or fuel-storage areas shall not be used to ventilate work areas.

26.C.04 When drilling rock or concrete, appropriate dust control measures shall be taken to maintain dust levels within safe limits.

26.C.05 Internal combustion engines, except diesel-powered engines on mobile equipment, are prohibited underground. Mobile diesel-powered equipment used underground in atmospheres other than gassy operations shall be either approved by MSHA (30 CFR 36), or shall be demonstrated to be fully equivalent to such MSHA-approved equipment, and shall be operated in accordance 30 CFR 36.

26.D FIRE PREVENTION AND PROTECTION

26.D.01 Fire prevention and protection plans.

a. For every underground construction project, a fire prevention and protection plan shall be developed and implemented. The plan shall detail:

(1) The specific work practices to be implemented for preventing fires;

(2) Response measures to be taken in case of fire to control and extinguish the fire;

(3) Equipment required for fire prevention and protection;

(4) Personnel requirements and responsibilities for fire prevention and protection; and

(5) Requirements for daily and weekly fire prevention and protection inspections.

b. Fire prevention and protection plans shall be incorporated in either the APP or the AHA and posted at the job site.

c. Fire prevention and protection plans shall be reviewed with all affected personnel as often as is necessary for them to maintain a working knowledge of emergency responsibilities and procedures.

d. Plans shall be drilled as often as is necessary to ensure their efficacy.

26.D.02 Fire extinguishers.

a. Fire extinguishers shall be provided and maintained in accordance with the requirements of Section 9.

b. Fire extinguishers (or equivalent protection) shall be provided and maintained at each portal and shaft entry, within 100 ft (30.4 m) of the advancing face of each tunnel, and at locations containing combustible materials.

c. A fire extinguisher of at least 4A:40B:C rating or other equivalent extinguishing means shall be provided at the head pulley and tail pulley of underground belt conveyors.

26.D.03 Open flames/fires and smoking.

a. Open flames and fires are prohibited in all underground construction operations except as permitted for welding, cutting, and other hot work operations.

b. Smoking may be allowed only in areas free of fire and explosion hazards.

c. Readily visible signs prohibiting smoking and open flames shall be posted in areas having fire or explosion hazards.

26.D.04 Heating devices used in tunnels shall be approved for such locations by a nationally-recognized testing laboratory.

26.D.05 Gasoline shall not be taken, stored, or used underground.

26.D.06 Acetylene, LP-Gas, and methylacetylene propadiene stabilized gas may be used underground only for welding, cutting, and other hot work. No more than the amount necessary for work during the next 24-hour period shall be permitted underground.

26.D.07 Only fire-resistant hydraulic fluids approved by a nationally-recognized authority or agency shall be used in hydraulically actuated underground machinery and equipment unless the machinery or equipment is protected by a fire suppression system or a multi-purpose fire extinguisher rated for sufficient capacity for the type and size of hydraulic equipment involved (but at least 4A:40B:C).

26.D.08 Storage of flammable and combustible materials.

a. Not more than a 1-day supply of diesel fuel may be stored underground.

b. Oil, grease, and diesel fuel stored underground shall be kept in tightly sealed containers in fire-resistant areas at least 300 ft (91.4 m) from underground explosive magazines and at least 100 ft (30.4 m) from shaft stations and steeply inclined passageways.

c. Flammable or combustible materials shall not be stored above ground within 100 ft (30.4 m) of any access opening to any underground operation unless they are located as far as practical from the opening and either a fire-resistant barrier of not less than a 1-hour rating is placed between the stored material and the opening.

d. Electrical installations in underground areas where oil, grease, or diesel fuel are stored shall be used only for lighting fixtures.

e. Lighting fixtures in storage areas or within 25 ft (7.6 m) of underground areas where oil, grease, or diesel fuel are stored shall be approved for Class I, Division 2 locations. ***> See 11.G.***

26.D.09 The piping of diesel fuel from the surface to an underground location is permitted only if:

a. Diesel fuel is contained at the surface in a tank whose maximum capacity is no more than the amount required to supply the equipment serviced by the underground fueling station for a 24-hour period;

b. The surface tank is connected to the underground fueling station by an acceptable pipe or hose system controlled at the surface by a valve, and at the shaft bottom by a hose nozzle (nozzle shall not be of the latch-open type);

c. The pipe is empty at all times except when transferring diesel fuel from the surface tank to a piece of equipment in use underground; and

d. Hoisting operations in the shaft are suspended during refueling operations if the supply piping in the shaft is not protected from damage.

26.D.10 Any structure located underground or within 100 ft (30.4 m) of an opening to the underground shall be constructed of material having a fire-resistance rating of at least 1 hour.

26.D.11 Oil-filled transformers shall not be used underground unless they are located in a fire-resistant enclosure and surrounded by a dike to contain the contents of the transformers in event of a rupture.

26.D.12 Noncombustible barriers shall be installed below welding or burning operations in or over shaft or raise.

26.E DRILLING

26.E.01 Drilling machines.

a. Employees shall not be allowed on a drill mast while the drill bit is in operation or the drill machine is being moved.

b. When drill machines are being moved from one drilling area to another, drill steel, tools, and other equipment shall be secured and the mast placed in a safe position.

c. Drills on columns shall be anchored firmly before drilling is started and shall be retightened frequently.

d. Jumbos.

(1) Safe access shall be provided to all working levels of drill jumbos.

(2) Jumbo decks and stair treads shall be designed to be slip-resistant and secured to prevent accidental displacement.

(3) Only employees assisting the operator shall be allowed to ride on jumbos, unless the jumbo meets the requirements for adequate seating arrangements that protect passengers from being struck, crushed, or caught between equipment or surfaces and has safe access.

(4) Employees working under jumbo decks shall be warned whenever drilling is about to begin.

(5) On jumbo decks over 10 ft (3 m) in height, guardrails, which are removable, or equal protection shall be provided on all open sides, excluding access openings of platforms, unless an adjacent surface provides equivalent fall protection.

(6) Stair access to jumbo decks wide enough to accommodate two persons if the deck is over 10 ft (3 m) in height.

(7) Receptacles or racks shall be provided for drill steel stored on jumbos.

(8) The employer shall provide mechanical means for lifting drills, roof bolts, mine straps, and other material to the top decks of jumbos over 10 ft (3 m) in height.

26.E.02 Scaling bars shall be available at scaling operations and shall be maintained in good conditions at all times. Blunted or severely worn bars shall not be used.

26.E.03 Blasting holes shall not be drilled through blasted rock (muck) or water.

26.E.04 Before commencing the drill cycle after a blast, the face and any remaining blasting holes shall be examined for misfires that, if found, shall be removed.

26.E.05 Employees in a shaft shall be protected either by location or by suitable barriers if powered mechanical loading equipment is used to remove muck containing unfired explosives.

26.F SHAFTS

26.F.01 All wells or shafts over 5 ft (1.5 m) in depth that employees must enter shall be supported by lagging, piling, or casing of sufficient strength to withstand shifting of the surrounding earth.

a. The full depth of the shaft shall be supported by casing or bracing except where the shaft penetrates into solid rock having characteristics that will not change because of exposure.

(1) Where the shaft passes through earth into solid rock or through solid rock into earth and where there is potential for

shear, the casing or bracing shall extend at least 5 ft (1.5 m) into the solid rock.

(2) When the shaft terminates in solid rock, the casing of bracing shall extend to the end of the shaft or 5 ft (1.5 m) into the solid rock, whichever is less.

b. The casing or bracing shall extend 42 in +/- 3 in (106.6 cm +/- 7.6 cm) above ground level, except that the minimum casing height may be reduced to 12 in (30.4 cm) provided that a standard railing is installed, that the ground adjacent to the top of the shaft is sloping away from the shaft collar to prevent entry of liquids, and that effective barriers are used to prevent mobile equipment operating near the shaft from jumping over the 12-in (30.4-cm) barrier.

26.F.02 After blasting operations in shafts, a competent person shall inspect the walls, ladders, timbers, blocking, and wedges to determined if they have loosened. Where found unsafe, corrections shall be made before shift operations are started.

26.F.03 No employee shall be permitted to enter an unsupported auger-type excavation in unstable material for any purpose. In such cases, necessary clean-out shall be accomplished without entry.

26.F.04 There shall be two safe means of access in shafts at all times: this may include the ladder and hoist.

26.G HOISTING

26.G.01 A warning light suitably located to warn employees at the shaft bottom and subsurface shaft entrances shall flash whenever a load is being moved in the shaft, except in fully enclosed hoistways.

26.G.02 Whenever a hoistway is not fully enclosed and employees are at the shaft bottom, conveyances or equipment shall be stopped at least 15 ft (4.5 m) above the bottom of the shaft and

held there until the signalman at the bottom of the shaft directs the operator to continue lowering the load; except that the load may be lowered without stopping if the load or conveyance is within full view of a bottom signalman who is in constant voice communication with the operator.

26.G.03 Before maintenance, repairs, or other work is commenced in a shaft served by a cage, skip, or bucket, the operator and other employees shall be informed and given suitable safety precautions. A sign warning that work is being performed in the shaft shall be installed at the shaft collar, at the operator's station, and at each underground landing.

26.G.04 Any connection between the hoisting rope and the cage or skip shall be compatible with the type of wire rope used for hoisting.

26.G.05 Spin-type connections, where used, shall be maintained in a clean condition and protected from foreign matter that could affect their operation.

26.G.06 Cage, skip, and load connections to the hoist rope shall be made so that the force of the hoist pull, vibration, misalignment, release of lift force, or impact will not disengage the connection. Moused or latched open-throat hooks do not meet this requirement.

26.G.07 When using wire rope wedge sockets, means shall be provided to prevent wedge escapement and to ensure that the wedge is properly seated.

26.H CAISSONS

26.H.01 In caisson work in which compressed air is used and the working chamber is less than 11 ft (3.3 m) in length, whenever such caissons are at any time suspended or hung while work is in progress so that the bottom of the excavation is more than 9 ft (2.7 m) below the deck of the working chamber, a shield shall be erected for the protection of the workers.

26.H.02 Shafts shall be subjected to a hydrostatic test, at which pressure they shall be tight. The shaft shall be stamped on the outside shell about 12 in (30.4 cm) from each flange to show the safe working pressure.

25.H.03 Whenever a shaft is used, it shall be provided, where space permits, with a safe, proper, and suitable staircase for its entire length, including landing platforms (not more than 20 ft (6 m) apart). Where this is impractical, ladders not more than 20 ft (6 m) high shall be installed with each section offset from adjacent sections and a guarded landing provided at each offset.

26.H.04 All caissons having a diameter or side greater than 10 ft (3 m) shall be provided with a man lock and shaft for the exclusive use of employees.

26.H.05 In addition to gauges in the locks, an accurate gauge shall be maintained on the outer and inner side of each bulkhead. These gauges shall be accessible at all times and kept in accurate working order.

26.H.06 In caisson operations where employees are exposed to compressed air working environments, the requirements of 26.I shall be complied with.

26.I COMPRESSED AIR WORK

26.I.01 All safety requirements for compressed air work will be carefully detailed in a compressed air work plan that shall be included as a part of the accident prevention plan or AHA.

26.I.02 The compressed air work plan shall include the following considerations:

a. Requirements for a medical lock and its operation,

b. An identification system for compressed air workers,

c. Communications system requirements,

d. Requirements for signs and recordkeeping,

e. Special compression and decompression requirements,

f. Man lock and decompression chamber requirements,

g. Requirements for compressor systems and air supply,

h. Ventilation requirements,

i. Electrical power requirements,

j. Sanitation considerations,

k. Fire prevention and fire protection considerations, and

l. Requirements for bulkheads and safety screens.

26.I.03 Work in compressed air environments shall be performed in compliance with the requirements of 29 CFR 1926.803.

26.J UNDERGROUND BLASTING ***> See Section 29.***

26.J.01 Explosives.

a. Dynamite used in tunnel blasting should be Fume Class 1. Fume Class 2 and Fume Class 3 explosives may be used if adequate ventilation is provided.

b. Storage of explosives, blasting agents, and detonators in tunnels or underground work areas shall be prohibited.

c. Trucks used for the transportation of explosives underground shall have the electrical system checked weekly to detect any failures that may constitute an electrical hazard. A written record of such inspections shall be kept on file and available for

review. The installation of auxiliary lights on truck beds that are powered by the truck's electrical system shall be prohibited.

d. Explosives or blasting agents, not in original containers, shall be placed in a suitable container when transported manually. Detonators, primers, and other explosives shall be carried in separate containers when transported manually.

26.J.02 Blasting circuits.

a. All underground blasts fired by external power shall be by a power blasting switch system shown in Figure 29-1.

b. Blasting power circuits shall be separate and distinct from, and kept clear of, other power and lighting circuits and pipes, rails, and other conductive material (excluding earth) to prevent explosives initiation or employee exposure to electric current.

c. Sectioning switches or equivalent shall be installed in the firing line at 500-ft (150.4-m) intervals.

26.J.03 Loading.

a. Prior to loading, all power, water, and air lines shall be disconnected from the loading jumbo and power lines, including lighting circuits, shall be moved back a minimum of 50 ft (15.2 m).

b. The loading area shall be illuminated (minimum 10 foot-candles (107.6 lx)) by floodlights located 50 ft (15.2 m) from the face. If additional illumination is needed, the loading crew shall be provided with head lamps approved by the United States Bureau of Mines.

c. Equipment used for pneumatic placement of non-cap-sensitive blasting agents shall be designed for that purpose and shall be grounded while in use.

26.J.04 Blasting.

a. The person in charge of blasting shall be the last to leave the blast area, shall see that no one remains in the blast area, and shall operate the sectioning switches in the firing line while proceeding out of the blast area.

b. No persons shall enter the tunnel blast area until the ventilation system has cleared the heading of harmful gases, smoke, and dust.

c. After each blast, the underground supports in the blast area shall be inspected and secured as necessary work is resumed. Rock surfaces shall be inspected, scaled, and if required, provided with shoring, bracing, rock bolts, shotcrete, or chain-link fabric, before mucking is started. Rock bolts within 100 ft (30.4 m) of a blast shall be tested after each blast before drilling for the next round begins.

d. The muck pile shall be wet down prior to mucking and kept wet during mucking operations.

26.J.05 Blasting in excavation work under compressed air.

a. When detonators or explosives are brought into an air lock, no employee (except the blaster, lock tender, and employees necessary for transport) shall be permitted to enter the air lock; no other material, supplies, or equipment shall be locked through with the explosive materials.

b. Detonators and explosives shall be taken separately into pressure working chambers.

c. All metal pipes, rails, air locks, and steel tunnel lining shall be electrically bonded and grounded at or near the portal or shaft. Such pipes and rails shall be cross-bonded at not less than 1000-ft (304.8-m) intervals throughout the length of the tunnel. In addition, each low air supply pipe shall be grounded at its delivery end.

d. The explosive suitable for use in wet holes shall be water resistant and shall be Fume Class 1.

e. When tunnel excavation in rock face is approaching mixed face, and when tunnel excavation is in mixed face, blasting shall be performed with light charges and with light burden on each hole. Advance drilling shall be performed as tunnel excavation in rock face approaches mixed face to determine the nature and extent of rock cover and the remaining distance ahead to soft ground.

26.J.06 See Section 29 for blasting requirements.

SECTION 27

CONCRETE AND MASONRY CONSTRUCTION AND STEEL ERECTION

27.A CONCRETE AND MASONRY CONSTRUCTION-GENERAL

27.A.01 Construction loads shall not be placed on a concrete or masonry structure or portion of a concrete or masonry structure unless the employer determines, based on information from a person who is qualified in structural design, that the structure or portion of the structure is capable of supporting the loads.

27.A.02 Employees shall not be permitted to work above or in positions exposed to protruding reinforcing steel or other impalement hazards unless provisions have been made to control the hazard.

27.A.03 Post-tensioning operations.

a. No employee (except those essential to the post-tensioning operations) shall be permitted to be behind jacks or end anchorages during post-tensioning operations.

b. Signs and barriers shall be erected to limit employee access to the post-tensioning area during tensioning operations.

27.A.04 Equipment.

a. Bulk storage bins, containers, or silos shall have conical or tapered bottoms with mechanical or pneumatic means of starting the flow of material.

b. Concrete mixers equipped with 1-yard or larger loading skips shall be equipped with a mechanical device to clear the skip of material and shall have guardrails installed on each side of the skip.

c. Handles on bull floats used where they may contact energized electrical conductors shall be constructed of nonconductive material or insulated with a nonconductive sheath whose electrical and mechanical characteristics provide equivalent protection.

d. Powered and rotating concrete troweling machines that are manually guided shall be equipped with a control switch that will automatically shut off the power whenever the operator removes his/her hands from the equipment handles.

e. Concrete pumping systems using discharge pipes shall be provided with pipe supports designed for 100% overload.

f. Handles of concrete buggies shall not extend beyond the wheels on either side of the buggy.

g. Concrete buckets equipped with hydraulic or pneumatically operated gates shall have positive safety latches or similar safety devices installed to prevent premature or accidental dumping. The buckets shall be designed to prevent material from accumulating on the top and sides of the bucket.

h. Sections of tremies and similar concrete conveyances shall be secured with wire rope (or equivalent material) in addition to the regular couplings or connections.

27.A.05 Riding on concrete buckets shall be prohibited.

27.A.06 Elevated concrete buckets shall be routed, to the extent practical, to minimize the exposure of workers to hazards associated with falling buckets or concrete. Vibrator crews shall be kept out from under concrete buckets suspended from cranes of cableways.

27.A.07 Structural and reinforcing steel for walls, piers, columns, and similar vertical structures shall be supported and/or guyed to prevent overturning or collapse. Support systems for reinforcing

steel that are independent of other form or shoring support systems shall be designed by a registered engineer.

a. Connections of equipment used in plumbing-up shall be secured.

b. The turnbuckles shall be secured to prevent unwinding while under stress.

c. Plumbing-up guys and related equipment shall be placed so that employees can get at the connection points.

d. Plumbing-up guys shall be removed only under the supervision of a competent person.

27.A.08 Measures shall be taken to prevent unrolled wire mesh from recoiling.

27.B FORMWORK AND SHORING

27.B.01 All formwork, shoring, and bracing shall be designed, fabricated, erected, supported, braced, and maintained so that it will safely support all vertical and lateral loads that might be applied until such loads can be supported by the structure.

27.B.02 Planning and design.

a. The planning and design of formwork and shoring shall be in accordance with provisions of American Concrete Institute (ACI) Publication 347.

b. The design and the erection and removal plans for formwork and shoring shall be submitted for review to the GDA.

c. The manufacturer's specifications for fabricated shoring systems shall be available at the job site during job planning and execution.

27.B.03 Base support.

a. Supporting ground or completed construction upon which formwork and shoring is to be placed shall be of adequate strength to carry the vertical and lateral loads to be imposed.

b. Sills for shoring shall be sound, rigid, and capable of carrying the maximum intended load.

c. Base plates, shore heads, extension devices, or adjustment screws shall be in firm contact with the footing sill and form material and, as applicable, shall be snug against the posts.

27.B.04 Splices shall be designed and constructed to prevent buckling and bending.

27.B.05 Diagonal bracing shall be provided in vertical and horizontal planes to provide stiffness and to prevent buckling of individual members.

27.B.06 Inspection.

a. All shoring equipment shall be inspected prior to erection to determine that it is as specified in the shoring design. Any equipment found to be damaged shall not be used.

b. Erected shoring equipment shall be inspected immediately prior to, during, and immediately after the placement of concrete. Any shoring equipment that is found to be damaged, displaced, or weakened shall be immediately reinforced or re-shored.

27.B.07 Re-shoring shall be provided to safely support slabs and beams after stripping or where such members are subjected to superimposed loads due to construction.

27.B.08 Fabricated shoring shall not be loaded beyond the safe working load recommended by the manufacturer.

27.B.09 Single post shores.

a. Wherever single post shores are used in more than one tier, the layout shall be designed and inspected by an engineer qualified in structural design.

b. Single post shores shall be vertically aligned and spliced to prevent misalignment.

c. When shoring is at an angle, sloping, or when the surface shored is sloping, the shoring shall be designed for such loading.

d. Adjustment of single post shores to raise formwork shall not be made after concrete is in place.

e. Fabricated single post shores and adjusting devices shall not be used if heavily rusted, bent, dented, rewelded, or have broken weldments or other defects; if they contain timber, they shall not be used if timber is split, cut, has sections removed, is rotted, or otherwise structurally damaged.

f. All timber and adjusting devices to be used for adjustable timber single post shores shall be inspected before erection.

g. All nails used to secure bracing or adjustable timber single post shores shall be driven home and the point of the nail bent over if possible.

h. For stability, single post shores shall be horizontally braced in both the longitudinal and transverse directions.

(1) Single-post shores shall be adequately braced in two mutually perpendicular directions at the splice level.

(2) Each tier shall also be diagonally braced in the same two directions.

(3) Bracing shall be installed as the shores are erected.

27.B.10 Tube and coupler shoring.

a. The material used for the couplers shall be of a structural type such as drop-forged steel, malleable iron, or structural grade aluminum. Gray cast iron shall not be used. No dissimilar metals shall be used together.

b. Couplers shall not be used if they are deformed, broken, or have defective or missing threads on bolts, or other defects.

c. When checking the erected shoring towers with the shoring design, the spacing between posts shall not exceed that shown on the layout and all interlocking of tubular members and tightness of couplings shall be checked.

27.B.11 Tubular welded-frame shoring.

a. All locking devices on frames and braces shall be in good working order, coupling pins shall align the frame or panel legs, pivoted cross braces shall have their center pivot in place, and all components shall be in a condition similar to that of original manufacture.

b. When checking the erected shoring frames with the shoring design, the spacing between towers and cross brace spacing shall not exceed that shown in the design and all locking devices shall be closed.

c. Devices for attaching external lateral stability bracing shall be fastened to the legs of the shoring frames.

27.B.12 Vertical slip forms.

a. The steel rods or pipe on which the jacks climb or by which the forms are lifted shall be designed specifically for that

purpose. Such rods shall be braced where not encased in concrete.

b. Jacks and vertical supports shall be positioned in such a manner that the vertical loads are distributed equally and do not exceed the capacity of the jacks.

c. The jacks or other lifting devices shall be provided with mechanical dogs or other automatic holding devices to provide protection in case of failure of the power supply or the lifting mechanism.

d. Lifting shall proceed steadily and uniformly and shall not exceed the predetermined safe rate of lift.

e. Lateral and diagonal bracing of the forms shall be provided to prevent excessive distortion of the structure during the jacking operation.

f. During jacking operations, the form structure shall be maintained in line and plumb.

g. All vertical lift forms shall be provided with scaffolding or work platforms completely encircling the area of placement.

27.B.13 Removal of formwork.

a. Forms and shores (except those on slab or grade and slip forms) shall not be removed until the individual responsible for forming and/or shoring determines that the concrete has gained sufficient strength to support its weight and all superimposed loads. Such determination shall be based on one of the following:

(1) Satisfaction of conditions stipulated in the plans and specifications for removal of forms and shores, or

(2) Concrete testing (in accordance with ASTM standard test methods) indicates that the concrete has achieved sufficient strength to support its weight and superimposed loads.

b. Re-shoring shall not be removed until the concrete being supported has attained adequate strength to support its weight and all loads placed on it.

27.C PRECAST CONCRETE OPERATIONS

27.C.01 Precast concrete members shall be adequately supported to prevent overturning or collapse until permanent connections are complete.

27.C.02 Lifting inserts and hardware.

a. Lifting inserts which are embedded or otherwise attached to tilt-up precast concrete members shall be capable of supporting at least two times the maximum intended load applied or transmitted to them.

b. Lifting inserts which are embedded or otherwise attached to precast concrete members, other than tilt-up members, shall be capable of supporting at least four times the maximum intended load applied or transmitted to them.

c. Lifting hardware shall be capable of supporting at least five times the maximum intended load applied or transmitted to the lifting device.

27.C.03 No employee shall be permitted under precast concrete members being lifted or tilted into position except employees required for the erection of those members.

27.D LIFT-SLAB OPERATIONS

27.D.01 Lift-slab operations shall be planned and designed by a registered engineer or architect: Such plans and designs shall include detailed instructions and sketches indicating the prescribed method of erection and shall be submitted to the GDA for review.

27.D.02 Jacking equipment.

a. The manufacturer's rated capacity shall be legibly marked on all jacks and shall not be exceeded.

b. Threaded rods and other members that transmit loads to the jacks shall have a minimum safety factor of 2.5

c. Jacks shall be designed and installed so that they will not continue to lift when overloaded.

d. All jacks shall have a positive stop to prevent overtravel.

e. Hydraulic jacks used in lift slab construction shall have a safety device that will cause the jacks to support the load in any position if the jack malfunctions.

27.D.03 Jacking operations.

a. When it is necessary to provide a firm foundation, the base of the jack shall be blocked or cribbed. Where there is a possibility of slippage of the metal cap of the jack, a wood block shall be placed between the cap and the load.

b. The maximum number of manually-controlled jacks on one slab shall be limited to 14, and in no event shall the number be too great to permit the operator to maintain the slab level within specific tolerances.

c. Jacking operations shall be synchronized to ensure even and uniform lifting of the slab.

d. During lifting, all points of the slab support shall be kept within 1/2 in (1.2 cm) of that needed to maintain the slab in a level position.

(1) If leveling is automatically controlled, a device shall be installed which will stop the operation when the 1/2 in (1.2 cm) leveling tolerance is exceeded.

(2) If leveling is manually controlled, such controls shall be located in a central location and attended by a trained operator while lifting is in progress.

e. No one shall be permitted under the slab during jacking operations.

27.E STRUCTURAL STEEL ASSEMBLY

27.E.01. Prior to beginning the erection of any structural steel, a steel erection plan shall be submitted to the GDA for review and acceptance.

27.E.02. Steel erection activities include:

a. Hoisting, laying out, placing, connecting, welding, burning, guying, bracing, bolting, plumbing, and rigging structural steel, steel joists and metal buildings;

b. Installing metal decking, curtain walls, window walls, siding systems, miscellaneous metals, ornamental iron, and similar materials; and

c. Moving point-to-point while performing these activities.

27.E.03 The following activities are covered by this Section when they occur during and are a part of steel erection activities: rigging, hoisting, laying out, placing, connecting, guying, bracing, dismantling, burning, welding, bolting, grinding, sealing, caulking, and all related activities for construction, alteration and/or repair of

materials and assemblies such as structural steel; ferrous metals and alloys; non-ferrous metals and alloys; glass; plastics and synthetic composite materials; structural metal framing and related bracing and assemblies; anchoring devices; structural cabling; cable stays; permanent and temporary bents and towers; false work for temporary supports of permanent steel members; stone and other non-precast concrete architectural materials mounted on steel frames; safety systems for steel erection; steel and metal joists; metal decking and raceway systems and accessories; metal roofing and accessories; metal siding; bridge flooring; cold formed steel framing; elevator beams; grillage; shelf racks; multi-purpose supports; crane rails and accessories; miscellaneous, architectural and ornamental metals and metal work; ladders; railings; handrails; fences and gates; gratings; trench covers; floor plates; castings; sheet metal fabrications; metal panels and panel wall systems; louvers; column covers; enclosures and pockets; stairs; perforated metals; ornamental iron work, expansion control including bridge expansion joint assemblies; slide bearings; hydraulic structures; fascias; soffit panels; penthouse enclosures; skylights; joint fillers; gaskets; sealants and seals; doors; windows; hardware; detention/security equipment and doors, windows and hardware; conveying systems; building specialties; building equipment; machinery and plant equipment, furnishings and special construction.

27.E.04 Written notifications. Before authorizing the commencement of steel erection, the controlling Contractor shall ensure that the steel erector is provided with the following written notifications:

a. The concrete in the footings, piers, and walls and the mortar in the masonry piers and walls has attained, on the basis of an appropriate ASTM standard test method of field-cured samples, either 75% of the intended minimum compressive design strength or sufficient strength to support the loads imposed during steel erection.

b. Any repairs, replacements, and modifications to the anchor bolts were conducted in accordance with contract specifications and/or the design engineer.

c. A steel erection Contractor shall not erect steel unless it has received written notification that the concrete in the footings, piers and walls or the mortar in the masonry piers and walls has attained, on the basis of an appropriate ASTM standard test method of field-cured samples, either 75% of the intended minimum compressive design strength or sufficient strength to support the loads imposed during steel erection.

d. Both Contractors will keep a copy of this written notification on-site.

27.E.05 Site layout. The controlling Contractor shall ensure that the following is provided and maintained:

a. Adequate access roads into and through the site for the safe delivery and movement of derricks, cranes, trucks, other necessary equipment, and the material to be erected; and means and methods for pedestrian and vehicular control. Exception: This requirement does not apply to roads outside of the construction site.

b. A firm, properly graded, drained area readily accessible to the work with adequate space for the safe storage of materials and the safe operation of the erector's equipment.

c. Pre-planning of overhead hoisting operations. All hoisting operations in steel erection shall be pre-planned.

27.E.06 Site-specific erection plan. Where employers elect, due to conditions specific to the site, to develop alternate means and methods that provide employee protection, a site-specific erection plan shall be developed by a qualified person and be available at the work site.

27.E.07 Hoisting and rigging. All the applicable requirements of Sections 15 and 16 apply to this Section.

27.E.08 Visual inspection of cranes. A competent person shall visually inspect cranes being used in steel erection activities prior to each shift. The inspection shall include observation for deficiencies during operation. At a minimum, this inspection shall include the following:

a. All control mechanisms for maladjustments;

b. Control and drive mechanism for excessive wear of components and contamination by lubricants, water, or other foreign matter;

c. Safety devices including, but not limited to, boom angle indicators, boom stops, boom kick out devices, A2B devices, and LMI where required;

d. Air, hydraulic, and other pressurized lines for deterioration or leakage, particularly those that flex in normal operation;

e. Hooks and latches for deformation, chemical damage, cracks, or wear;

f. Wire rope reeving for compliance with hoisting equipment manufacturer's specifications;

g. Electrical apparatus for malfunctioning, signs of excessive deterioration, dirt, or moisture accumulation;

h. Hydraulic system for proper fluid level;

i. Tires for proper inflation and condition;

j. Ground conditions around the hoisting equipment for proper support, including ground settling under and around outriggers, ground water accumulation, or similar conditions;

k. The hoisting equipment for level position; and

l. The hoisting equipment for level position after each move and setup.

27.E.09 Deficiencies. If any deficiency is identified, an immediate determination shall be made by the competent person as to whether the deficiency constitutes a hazard.

a. If the deficiency is determined to constitute a hazard, the hoisting equipment shall be removed from service until the deficiency has been corrected.

b. The operator shall be responsible for those operations under the operator's direct control. Whenever there is any doubt as to safety, the operator shall have the authority to stop and refuse to handle loads until safety has been assured.

27.E.10 A qualified rigger (a rigger who is also a qualified person) shall inspect the rigging prior to each shift.

27.E.11 The headache ball, hook, or load shall not be used to transport personnel.

27.E12 Cranes or derricks may be used to hoist employees on a personnel platform when all applicable provisions of 22.F have been met.

27.E.13 Safety latches on hooks shall not be deactivated or made inoperable.

27.E.14 Structural stability.

a. Structural stability shall be maintained at all times during the erection process.

b. The following additional requirements shall apply for multi-story structures:

(1) The permanent floors shall be installed as the erection of structural members progresses, and there shall be not more than eight stories between the erection floor and the uppermost permanent floor, except where the structural integrity is maintained as a result of the design.

(2) At no time shall there be more than four floors or 48 ft (14.6 m), whichever is less, of unfinished bolting or welding above the foundation or uppermost permanently secured floor, except where the structural integrity is maintained as a result of the design.

(3) A fully planked or decked floor or nets shall be maintained within two stories or 30 ft (9.1 m), whichever is less, directly under any erection work being performed.

27.E.15 Walking/working surfaces.

a. Shear connectors and other similar devices.

(1) Tripping hazards. Shear connectors (such as headed steel studs, steel bars, or steel lugs), reinforcing bars, deformed anchors or threaded studs shall not be attached to the top flanges of beams, joists, or beam attachments so that they project vertically from or horizontally across the top flange of the member until after the metal decking, or other walking/working surface, has been installed.

(2) Installation of shear connectors on composite floors, roofs, and bridge decks. When shear connectors are used in construction of composite floors, roofs, and bridge decks, employees shall lay out and install the shear connectors after the metal decking has been installed, using the metal decking as a working platform.

b. Slip resistance of metal decking.

c. Slip resistance of skeletal structural steel. Workers shall not be permitted to walk the top surface of any structural steel

member that has been coated with paint or similar material unless documentation or certification that the coating has achieved a minimum average slip resistance of 0.50 when measured with an English XL tribometer or equivalent tester on a wetted surface at a testing laboratory is provided. Such documentation or certification shall be based on the appropriate ASTM standard test method conducted by a laboratory capable of performing the test. The results shall be available at the site and to the steel erector.

d. Plumbing-up.

(1) When deemed necessary by a competent person, plumbing-up equipment shall be installed in conjunction with the steel erection process to ensure the stability of the structure.

(2) When used, plumbing-up equipment shall be in place and properly installed before the structure is loaded with construction material such as loads of joists, bundles of decking, or bundles of bridging.

(3) Plumbing-up equipment shall be removed only with the approval of a competent person.

e. Metal decking - Hoisting, landing, and placing of metal decking bundles.

(1) Bundle packaging and strapping shall not be used for hoisting unless specifically designed for that purpose.

(2) If loose items such as dunnage, flashing, or other materials are placed on the top of metal decking bundles to be hoisted, such items shall be secured to the bundles.

(3) Bundles of metal decking on joists shall be landed in accordance with 27.E.29.

(4) Metal decking bundles shall be landed on framing members so that enough support is provided to allow the bundles to be unbanded without dislodging the bundles from the supports.

(5) At the end of the shift or when environmental or jobsite conditions require, metal decking shall be secured against displacement.

(6) Roof and floor holes and openings. Metal decking at roof and floor holes and openings shall be installed as follows:

(a) Framed metal deck openings shall have structural members turned down to allow continuous deck installation except where not allowed by structural design constraints or constructibility.

(b) Roof and floor holes and openings shall be decked over. Where large size, configuration, or other structural design does not allow openings to be decked over, employees shall be protected from falls.

(c) Metal decking holes and openings shall not be cut until immediately prior to being permanently filled with the equipment or structure needed or intended to fulfill its specific use and that meets the strength requirements of 27.E.16, or shall be immediately covered.

27.E.16 Covering roof and floor openings.

a. Covers for roof and floor openings shall be capable of supporting, without failure, twice the weight of the employees, equipment, and materials that may be imposed on the cover at any one time.

b. All covers shall be secured when installed to prevent accidental displacement by the wind, equipment, or employees.

c. All covers shall be painted with high-visibility paint or shall be marked with the word **"HOLE"** or **"COVER"** to provide warning of the hazard.

d. Smoke dome or skylight fixtures that have been installed, are not considered covers for the purpose of this Section unless they meet the strength requirements of 27.E.16a and 27.H.09.

e. Decking gaps around columns. Wire mesh, exterior plywood, or equivalent, shall be installed around columns where planks or metal decking do not fit tightly. The materials used must be of sufficient strength to provide fall protection for personnel and prevent objects from falling through.

27.E.17 Installation of metal decking

a. Metal decking shall be laid tightly and immediately secured upon placement to prevent accidental movement or displacement.

b. During initial placement metal-decking panels shall be placed to ensure full support by structural members.

27.E.18 Derrick floors.

a. A derrick floor shall be fully decked and/or planked and the steel member connections completed to support the intended floor loading.

b. Temporary loads placed on a derrick floor shall be distributed over the underlying support members so as to prevent local overloading of the deck material.

27.E.19 Column anchorage

a. General requirements for erection stability.

(1) All columns shall be anchored by a minimum of four anchor rods (anchor bolts).

(2) Each column anchor rod (anchor bolt) assembly, including the column-to-base plate weld and the column foundation, shall be designed to resist a minimum eccentric gravity load of 300 lbs (136.2 kg) located 18 in (45.7 cm) from the extreme outer face of the column in each direction at the top of the column shaft.

(3) Columns shall be set on level finished floors, pre-grouted leveling plates, leveling nuts, or shim packs that are adequate to transfer the construction loads.

(4) All columns shall be evaluated by a competent person to determine whether guying or bracing is needed; if guying or bracing is needed, it shall be installed.

b. Repair, replacement or field modification of anchor rods (anchor bolts).

(1) Anchor rods (anchor bolts) shall not be repaired, replaced, or field-modified without the approval of the project structural engineer of record.

(2) Prior to the erection of a column, the controlling Contractor shall provide written notification to the steel erector if there has been any repair, replacement, or modification of the anchor rods (anchor bolts) of that column.

27.E.20 Beams and columns

a. During the final placing of solid web structural members, the load shall not be released from the hoisting line until the members are secured with at least two bolts per connection (of the same size and strength as shown in the erection drawings) drawn up wrench-tight or the equivalent as specified by the project structural engineer of record, except as specified in 27.E.21.

b. A competent person shall determine if more than two bolts are necessary to ensure the stability of cantilevered members; if additional bolts are needed, they shall be installed.

27.E.21 Diagonal bracing. Solid web structural members used as diagonal bracing shall be secured by at least one bolt per connection drawn up wrench-tight or the equivalent as specified by the project structural engineer of record.

27.E.22 Double connections

a. Double connections at columns and/or at beam webs over a column. When two structural members on opposite sides of a column web, or a beam web over a column, are connected sharing common connection holes, at least one bolt with its wrench-tight nut shall remain connected to the first member unless a shop-attached or field-attached seat or equivalent connection device is supplied with the member to secure the first member and prevent the column from being displaced.

b. If a seat or equivalent device is used, the seat (or device) shall be designed to support the load during the double connection process. It shall be adequately bolted or welded to both a supporting member and the first member before the nuts on the shared bolts are removed to make the double connection.

27.E.23 Column splices. Each column splice shall be designed to resist a minimum eccentric gravity load of 300 lbs (136.2 kg) located 18 in (45.7 cm) from the extreme outer face of the column in each direction at the top of the column shaft.

27.E.24 Perimeter columns. Perimeter columns shall not be erected unless:

a. The perimeter columns extend a minimum of 48 in (121.9 cm) above the finished floor to permit installation of perimeter safety cables prior to erection of the next tier, except where constructibility does not allow.

b. The perimeter columns have holes or other devices in or attached to perimeter columns at 42-45 in (106.6-114.3 cm) above the finished floor and the midpoint between the finished floor and the top cable to permit installation of perimeter safety cables except where constructibility does not allow.

27.E.25 Open web steel joists.

a. Except as provided in paragraph (b)(2) below, where steel joists are used and columns are not framed in at least two directions with solid web structural steel members, a steel joist shall be field-bolted at the column to provide lateral stability to the column during erection. For the installation of this joist:

(1) A vertical stabilizer plate shall be provided on each column for steel joists. The plate shall be a minimum of 6 in by 6 in (15.2 cm by 15.2 cm) and shall extend at least 3 in (7.6 cm) below the bottom chord of the joist with a 13/16-in (2.1-cm) hole to provide an attachment point for guying or plumbing cables.

(2) The bottom chords of steel joists at columns shall be stabilized to prevent rotation during erection.

(3) Hoisting cables shall not be released until the seat at each end of the steel joist is field-bolted, and each end of the bottom chord is restrained by the column stabilizer plate.

b. Where constructibility does not allow a steel joist to be installed at the column:

(1) An alternate means of stabilizing joists shall be installed on both sides near the column and shall:

(a) Provide stability equivalent to paragraph a(1) above,

(b) Be designed by a qualified person,

(c) Be shop installed, and

(d) Be included in the erection drawings.

(2) Hoisting cables shall not be released until the seat at each end of the steel joist is field-bolted and the joist is stabilized.

c. Where steel joists at or near columns span 60 ft (18.3 m) or less, the joist shall be designed with sufficient strength to allow one employee to release the hoisting cable without the need for erection bridging.

d. Where steel joists at or near columns span more than 60 ft (18.3 m), the joists shall be set in tandem with all bridging installed unless an alternative method of erection, which provides equivalent stability to the steel joist, is designed by a qualified person and is included in the site-specific erection plan.

e. A steel joist or steel joist girder shall not be placed on any support structure unless such structure is stabilized.

f. When steel joist(s) are landed on a structure, they shall be secured to prevent unintentional displacement prior to installation.

g. No modification that affects the strength of a steel joist or steel joist girder shall be made without the approval of the project structural engineer of record.

h. Field-bolted joists.

(1) Except for steel joists that have been pre-assembled into panels, connections of individual steel joists to steel structures in bays of 40 ft (12.1 m) or more shall be fabricated to allow for field bolting during erection.

(2) These connections shall be field-bolted unless constructibility does not allow.

i. Steel joists and steel joist girders shall not be used as anchorage points for a fall arrest system unless written approval to do so is obtained from a qualified person.

j. A bridging terminus point shall be established before bridging is installed.

27.E.26 Attachment of steel joists and steel joist girders.

a. Each end of "K" series steel joists shall be attached to the support structure with a minimum of two 1/8-in (0.3-cm) fillet welds 1 in (2.5 cm) long or with two 1/2-in (1.2-cm) bolts, or the equivalent.

b. Each end of "LH" and "DLH" series steel joists and steel joist girders shall be attached to the support structure with a minimum of two1/4-inch (0.6-cm) fillet welds 2 in (5 cm) long, or with two 3/4-in (1.9-cm) bolts, or the equivalent.

c. Except as provided in paragraph d below, each steel joist shall be attached to the support structure, at least at one end on both sides of the seat, immediately upon placement in the final erection position and before additional joists are placed.

d. Panels that have been pre-assembled from steel joists with bridging shall be attached to the structure at each corner before the hoisting cables are released.

27.E.27 Erection of steel joists.

a. Both sides of the seat of one end of each steel joist that requires bridging under Tables 27-1 and 27-2 shall be attached to the support structure before hoisting cables are released.

TABLE 27-1

ERECTION BRIDGING FOR SHORT SPAN JOISTS

JOIST	SPAN	JOIST	SPAN
8L1	NM	22K6	36-0
10K1	NM	22K7	40-0
12K1	23-0	22K9	40-0
12K3	NM	22K10	40-0
12K5	NM	22K11	40-0
14K1	27-0	24K4	36-0
14K3	NM	24K5	38-0
14K4	NM	24K6	39-0
14K6	NM	24K7	43-0
16K2	29-0	24K8	43-0
16K3	30-0	24K9	44-0
16K4	32-0	24K10	NM
16K5	32-0	24K12	NM
16K6	NM	26K5	38-0
16K7	NM	26K6	39-0
16K9	NM	26K7	43-0
18K3	31-0	26K8	44-0
18K4	32-0	26K9	45-0
18K5	33-0	26K10	49-0
18K6	35-0	26K12	NM
18K7	NM	28K6	40-0
18K9	NM	28K7	43-0
18K10	NM	28K8	44-0
20K3	32-0	28K9	45-0
20K4	34-0	28K10	49-0
20K5	34-0	28K12	53-0
20K6	36-0	30K7	44-0
20K7	39-0	30K8	45-0
20K9	39-0	30K9	45-0
20K10	NM	30K10	50-0
22K4	34-0	30K11	52-0
22K5	35-0	30K12	54-0

TABLE 27-1 (CONTINUED)

ERECTION BRIDGING FOR SHORT SPAN JOISTS

JOIST	SPAN	JOIST	SPAN
10KCS1	NM	20KCS2	36-0
10KCS2	NM	20KCS3	39-0
12KCS1	NM	20KCS4	NM
12KCS2	NM	24KCS5	NM
12KCS3	NM	26KCS2	39-0
14KCS1	NM	26KCS3	44-0
14KCS2	NM	26KCS4	NM
14KCS3	NM	26KCS5	NM
16KCS2	NM	28KCS2	40-0
16KCS3	NM	28KCS3	45-0
16KCS4	NM	28KCS4	53-0
16KCS5	NM	28KCS5	53-0
18KCS2	35-0	30KC53	45-0
18KCS3	NM	30KCS4	54-0
18KCS4	NM	30KCS5	54-0
18KCS5	NM		

NM=diagonal bolted bridging not mandatory for joists under 40 ft (12.1 m).

TABLE 27-2

ERECTION BRIDGING FOR LONG SPAN JOISTS

JOIST	SPAN	JOIST	SPAN
18LH02	33-0	28LH06	42-0
18LH03	NM	28LH07	NM
18LH04	NM	28LH08	NM
18LH05	NM	28LH09	NM
18LH06	NM	28LH10	NM
18LH07	NM	28LH11	NM
18LH08	NM	28LH12	NM
18LH09	NM	28LH13	NM
20LH02	33-0	32LH06	47-0 through 60-0
20LH03	38-0	32LH07	47-0 through 60-0
20LH04	NM	32LH08	55-0 through 60-0
20LH05	NM	32LH09	NM through 60-0
20LH06	NM	32LH10	NM through 60-0
20LH07	NM	32LH11	NM through 60-0
20LH08	NM	32LH12	NM through 60-0
20LH09	NM	32LH13	NM through 60-0
20LH10	NM	32LH14	NM through 60-0
24LH03	35-0	32LH15	NM through 60-0
24LH04	39-0	36LH07	47-0 through 60-0
24LH05	40-0	36LH08	47-0 through 60-0
24LH06	45-0	36LH09	57-0 through 60-0
24LH07	NM	36LH10	NM through 60-0
24LH08	NM	36LH11	NM through 60-0
24LH09	NM	36LH12	NM through 60-0
24LH10	NM	36LH13	NM through 60-0
24LH11	NM	36LH14	NM through 60-0
28LH05	42-0	36LH15	NM through 60-0

NM = diagonal bolted bridging not mandatory for joists under 40 feet (12.1 m).

b. For joists over 60 ft (18.2 m), both ends of the joist shall be attached as specified in 27.E.26 and the provisions of 27.E.28 are met before the hoisting cables are released.

c. On steel joists that do not require erection bridging under Tables 27-1 and 27-2, only one employee shall be allowed on the joist until all bridging is installed and anchored.

d. Employees shall not be allowed on steel joists where the span of the steel joist is equal to or greater than the span shown in Tables 27-1 and 27-2 in accordance with 27.E.28.

e. When permanent bridging terminus points cannot be used during erection, additional temporary bridging terminus points are required to provide stability.

27.E.28 Erection bridging.

a. Where the span of the steel joist is equal to or greater than the span shown in Tables 27-1 and 27-2, the following shall apply:

(1) A row of bolted diagonal erection bridging shall be installed near the mid-span of the steel joist,

(2) Hoisting cables shall not be released until this bolted diagonal erection bridging is installed and anchored, and

(3) No more than one employee shall be allowed on these spans until all other bridging is installed and anchored.

b. Where the span of the steel joist is over 60 ft (18.2 m) through 100 ft (30.4 m), the following shall apply:

(1) All rows of bridging shall be bolted diagonal bridging,

(2) Two rows of bolted diagonal erection bridging shall be installed near the third points of the steel joist,

(3) Hoisting cables shall not be released until this bolted diagonal erection bridging is installed and anchored, and

(4) No more than two employees shall be allowed on these spans until all other bridging is installed and anchored.

c. Where the span of the steel joist is over 100 ft (30.4 m) through 144 ft (43.9 m), the following shall apply:

(1) All rows of bridging shall be bolted diagonal bridging,

(2) Hoisting cables shall not be released until all bridging is installed and anchored, and

(3) No more than two employees shall be allowed on these spans until all bridging is installed and anchored.

d. For steel members spanning over 144 ft (43.9 m), the erection methods used shall be in accordance with 27.E.20 through 27.E.24.

e. Where any steel joist specified in paragraphs b above and 27.E.29a, b, and c is a bottom chord-bearing joist, a row of bolted diagonal bridging shall be provided near the support(s). This bridging shall be installed and anchored before the hoisting cable(s) is released.

f. When bolted diagonal erection bridging is required by this section, the following shall apply:

(1) The bridging shall be indicated on the erection drawing;

(2) The erection drawing shall be the exclusive indicator of the proper placement of this bridging;

(3) Shop-installed bridging clips, or functional equivalents, shall be used where the bridging bolts to the steel joists;

(4) When two pieces of bridging are attached to the steel joist by a common bolt, the nut that secures the first piece of bridging shall not be removed from the bolt for the attachment of the second; and

(5) Bridging attachments shall not protrude above the top chord of the steel joist.

27.E.29 Landing and placing loads.

a. During the construction period, the employer placing a load on steel joists shall ensure that the load is distributed so as not to exceed the carrying capacity of any steel joist.

b. Except for paragraph d below, no construction loads are allowed on the steel joists until all bridging is installed and anchored and all joist-bearing ends are attached.

c. The weight of a bundle of joist bridging shall not exceed a total of 1,000 lbs (454 kg). A bundle of joist bridging shall be placed on a minimum of three steel joists that are secured at one end. The edge of the bridging bundle shall be positioned within 1 ft (0.3 m) of the secured end.

d. No bundle of decking may be placed on steel joists until all bridging has been installed and anchored and all joist bearing ends attached, unless all of the following conditions are met:

(1) The employer has first determined from a qualified person and documented in a site-specific erection plan that the structure or portion of the structure is capable of supporting the load,

(2) The bundle of decking is placed on a minimum of three steel joists,

(3) The joists supporting the bundle of decking are attached at both ends,

(4) At least one row of bridging is installed and anchored,

(5) The total weight of the bundle of decking does not exceed 4,000 lbs (1816 kg), and

(6) Placement of the bundle of decking shall follow paragraph e below.

e. The edge of the construction load shall be placed within 1 ft (0.3 m) of the bearing surface of the joist end.

27.F SYSTEMS-ENGINEERED METAL BUILDINGS.

27.F.01 All of the requirements of the previous section apply to the erection of systems-engineered metal except 27.E.19 (column anchorage) and 27.E.25 (open web steel joists).

a. Each structural column shall be anchored by a minimum of four anchor rods (anchor bolts).

b. Rigid frames shall have 50% of their bolts or the number of bolts specified by the manufacturer (whichever is greater) installed and tightened on both sides of the web adjacent to each flange before the hoisting equipment is released.

c. Construction loads shall not be placed on any structural steel framework unless such framework is safely bolted, welded, or otherwise adequately secured.

d. In girt and eave strut-to-frame connections, when girts or eave struts share common connection holes, at least one bolt with its wrench-tight nut shall remain connected to the first member unless a manufacturer-supplied, field-attached seat or similar connection device is present to secure the first member so that the girt or eave strut is always secured against displacement.

(1) Releasing the hoisting cables,

(2) Allowing an employee on the joists, or

(3) Allowing any construction loads on the joists.

e. Purlins and girts shall not be used as an anchorage point for a fall arrest system unless written approval is obtained from a qualified person.

f. Purlins may only be used as a walking/working surface when installing safety systems, after all permanent bridging has been installed and fall protection is provided.

g. Construction loads may be placed only within a zone that is within 8 ft (2.4 m) of the centerline of the primary support member.

h. Both ends of all steel joists or cold-formed joists shall be fully bolted and/or welded to the support structure before:

27.F.02 Falling object protection.

a. Securing loose items aloft. All materials, equipment, and tools, which are not in use while aloft, shall be secured against accidental displacement.

b. Protection from falling objects other than materials being hoisted. The controlling Contractor shall bar other construction processes below steel erection unless overhead protection for the employees below is provided.

27.F.03 Fall protection.

a. Each employee engaged in a steel erection activity who is on a walking/working surface with an unprotected side or edge more than 6 ft (1.8 m) above a lower level shall be protected from fall hazards by guardrail systems, safety net systems, personal fall arrest systems, positioning device systems, or fall restraint systems.

b. Perimeter safety cables. On multi-story structures, perimeter safety cables shall be installed at the final interior and exterior perimeters of the floors as soon as the metal decking has been installed.

27.F.04 Each connector shall:

a. Be protected, in accordance with 27.F.03, from fall hazards of more than 6 feet (1.8 m) above a lower level.

b. Have completed connector training in accordance with 27.F.10 and 27.F.11

c. Be provided, at heights over 6 ft (1.8 m) above a lower level, with a personal fall arrest system, positioning device system or fall restraint system and wear the equipment necessary to be able to be tied off; or be provided with other means of protection from fall hazards in accordance with Sections 5 and 21.

27.F.05 Controlled decking zones (CDZ) are not permitted.

27.F.06 Guardrail systems, safety net systems, personal fall arrest systems, positioning device systems, and their components shall conform to Sections 5 and 21.

27.F.07 Fall arrest system components shall be used in fall restraint systems and shall conform to the requirements in this manual.

27.F.08 Perimeter safety cables shall meet the criteria for guardrail systems.

27.F.09 Custody of fall protection. Fall protection provided by the steel erector shall remain in the area where steel erection activity has been completed, to be used by other trades, only if the controlling Contractor or its authorized representative:

a. Has directed the steel erector to leave the fall protection in place, and

b. Has inspected and accepted control and responsibility of the fall protection prior to authorizing persons other than steel erectors to work in the area.

27.F.10 Training personnel. Training required by this Section shall be provided by a qualified person(s).

27.F.11 Fall hazard training. The employer shall provide a training program for all employees exposed to fall hazards. The program shall include training and instruction in the following areas:

a. The recognition and identification of fall hazards in the work area;

b. The use and operation of guardrail systems (including perimeter safety cable systems), personal fall arrest systems, positioning device systems, fall restraint systems, safety net systems, and other protection to be used;

c. The correct procedures for erecting, maintaining, disassembling, and inspecting the fall protection systems to be used;

d. The procedures to be followed to prevent falls to lower levels and through or into holes and openings in walking/working surfaces and walls to meet requirements of 27.E.

27.F.12 Special training programs. In addition to the training required above, the employer shall provide special training to employees engaged in connector procedures. The employer shall ensure that each connector has been provided training in the following areas:

a. The nature of the hazards associated with connecting; and

b. The establishment, access, and proper connecting techniques.

27.G MASONRY CONSTRUCTION

27.G.01 A limited access zone shall be established whenever a masonry wall is being constructed. The limited access zone shall conform to the following:

a. The limited access zone shall be established prior to the start of construction on the wall.

b. The limited access zone shall be equal to the height of the wall to be constructed plus 4 ft (1.2 m), and shall run the entire length of the wall.

c. The limited access zone shall be established on the side of the wall that will be unscaffolded.

d. The limited access zone shall be restricted to entry by employees actively engaged in constructing the wall; no other employees shall be permitted to enter the zone.

e. The limited access zone shall remain in place until the wall is adequately supported to prevent overturning and to prevent collapse unless the height of the wall is over 8 ft (2.4 m), in which case the limited access zone shall remain in place until the requirements of 27.G.02 have been met.

27.G.02 All masonry walls over 8 ft (2.4 m) in height shall be adequately braced to prevent overturning and to prevent collapse unless the wall is adequately supported so that it will not overturn or collapse. The bracing shall remain in place until permanent supporting elements of the structure are in place.

27.G.03 Scaffolds for masonry construction workers shall not be used to provide temporary lateral support of masonry walls.

27.G.04 Cleanouts shall be on the side of the masonry wall opposite to the scaffolding.

27.G.05 Fall protection shall be provided to masonry workers exposed to falls of 6 ft (1.8 m) or more. **> *See Section 21***

27.H ROOFING

27.H.01 Before work begins, a competent person shall complete a daily inspection of each job site. This individual, designated by management, shall be capable of identifying existing predictable hazards and has the authority to take prompt corrective action to eliminate them. Hazards shall be eliminated by engineering and if this cannot be accomplished, guarding to isolate the hazard from the exposed employees shall be implemented. In no case shall warnings or instructions be used as a substitute for elimination of hazards by engineering means or guarding.

27.H.02 Prior to the start of work, a structural analysis of the roof shall be conducted by a qualified person to assure that the load capacity of the rood deck will not be exceeded.

27.H.03 Where the work presents a potential hazard to the public, the Contractor shall set up barricades with proper postings to alert public to the hazards. Visible signs and barricades for the information, protection, and safety of the public shall be provided and properly maintained. They shall be set up in accordance with ANSI D6.1. Applicable statutes and local regulations shall be examined and the more restrictive requirements shall be followed.

27.H.04 Work on the roof shall be halted during severe weather such as strong winds, electrical storms, icing conditions, heavy rain, or snow as soon as practical.

27.H.05 The employer shall establish emergency plans and fire prevention plans. All employees shall be trained in accordance with these plans.

27.H.06 Roof openings and holes shall be provided with covers or guardrail systems on all exposed sides.

27.H.07 Roofing material, such as roofing membrane, insulation or felts, covering or partly covering openings or holes, shall be immediately cut out. No hole or opening shall be left unattended unless covered.

27.H.08 All covers for openings shall be provided with a sign stating **"Danger Roof Opening---Do Not Remove."** The message on the sign shall state that there is an opening beneath the cover and that the cover is not to be removed without specific authorization of the competent person. The sign shall be visible from all sides of the cover and shall comply with provisions of danger signs as specified in ANSI Z535.2-1991, "C".

27.H.09 Skylights warning lines, screens or covers, shall guard skylights, together with guardrails. Skylight screens are acceptable if they are of such construction and mounting that they are capable of withstanding a static load of at least 250 lb (113.4 kg) applied perpendicularly at any one area on the screen. They shall also be of sufficient construction and mounting that when a load of 250 lb (113.4 kg) or more falls against the screen, the glass or lens below will not break. The construction shall be of grillwork with openings not more than 4 in (10.1 cm) long or of slats with openings not more than 2 in (5 cm) wide with an unrestricted length.

27.H.10 Fall protection requirements.

a. In the construction, maintenance, repair, and demolition, of roofs, fall protection systems shall be provided which will prevent personnel from slipping and falling from the roof and prevent personnel on lower levels from being struck by falling objects. **>** ***See Section 21***

b. Employees engaged in the construction, maintenance, or repair of built-up roofing (but not construction of the roof deck) on low-slope roofs with unprotected sides and edges 6 ft (1.8 m) or more above lower levels, shall be protected from falling by guardrail systems, safety net systems, personnel fall arrest systems, or a combination of warning line system and guardrail system, warning line system and safety net system, or warning

line system and personal fall arrest system, or a warning line system and a safety monitoring system. Or on roofs 50 ft (15.2 m) or less in width, the use of a safety monitoring system alone without a warning line system is permitted. **> Each of the above systems is presented in their order of hierarchy and shall be considered as such in their application. A competent person shall evaluate each situation and determine which level of protection is necessary beginning with the use of guardrails. The competent person shall develop a fall protection plan and submit it to the GDA for review and acceptance prior to the start of work.**

c. Steep sloped roofs with unprotected sides and edges 6 ft (1.8 m) or more above a lower surface shall be protected from falling by guardrail systems with toe boards, safety net systems, or personal fall arrest systems.

27.H.11 On all roofs greater than 16 ft (4.8 m) in height, a hoisting device, stairways, or progressive platforms shall be furnished for supplying materials and equipment.

27.H.12 Roofing materials and accessories that could be moved by the wind, including metal roofing panels, which are on the roof and unattached, shall be secured when wind speeds are greater than, or are anticipated to exceed, 10 mph (16.1 km/h).

27.H.13 Level, guarded platforms shall be provided at the landing area on the roof.

27.H.14 Crawling boards.

a. Crawling boards shall be not less than 10 in (25.4 cm) wide and 1 in (2.5 cm) thick, having cleats 1 in x 1-1/2 in (2.5 cm x 3.8 cm).

b. Cleats shall be equal in length to the width of the board and spaced at equal intervals not to exceed 24 in (60.9 cm).

c. Nails shall be driven through and clinched on the underside.

d. Crawling boards shall be secured and extend from the ridge pole to the eaves when used with roof construction, repairs, or maintenance.

e. A firmly fastened lifeline of at least 3/4 in (1.9 cm) diameter rope, or equivalent, shall be strung beside each crawling board for a handhold.

27.H.15 Roofing brackets.

a. Roofing brackets shall be secured by nailing in addition to the pointed metal projections.

b. When it is impractical to nail brackets, rope supports shall be used. When rope supports are used, they shall consist of first-grade manila rope, 3/4 in (1.9 cm) diameter or equivalent.

27.H.16 When their use is permitted, warning line systems shall comply with the following:

a. Warning lines shall be erected around all sides of the work area.

(1) When mechanical equipment is not being used, the warning line shall be erected not less than 6 ft (1.8 m) from the roof edge.

(2) When mechanical equipment is being used, the warning line shall be erected not less than 6 ft (1.8 m) from the roof edge that is parallel to the direction of mechanical equipment operation and not less than 10 ft (3.0 m) from the roof edge that is perpendicular to the direction of mechanical equipment operation.

b. Warning lines shall consist of ropes, wires, or chains, and supporting stanchions erected as follows:

(1) The rope, wire, or chain shall be flagged at not more than 6 ft (1.8 m) intervals with high visibility material.

(2) The rope, chain, or wire shall be rigged and supported in such a way that its lowest point (including sag) is no less than 34 in (86.4 cm) from the roof surface and its highest point no more than 39 in (99 cm) from the roof surface.

(3) After being erected, with the rope, wire, or chain attached, stanchions shall be capable of resisting, without tipping over, a force of at least 16 lb (7.3 kg) applied horizontally against the stanchion 30 in (76.2 cm) above the walking/working surface, perpendicular to the warning line, and in the direction of the roof, floor, or platform edge.

(4) The rope, wire, or chain shall have a minimum tensile strength of 500 lb (226.8 kg), and after being attached to the stanchions shall be capable of supporting, without breaking, the loads applied to the stanchions (as described in (3) above).

(5) The lines shall be attached at each stanchion in such a way that pulling on one section of the line between stanchions will not result in slack being taken up in adjacent sections before the stanchion tips over.

(6) No employee shall be allowed in the area between a roof edge and a warning line unless the employee is performing work in that area and is protected by a motion stopping safety (MSS) system.

(7) Mechanical equipment on roofs shall be used or stored only in areas where employees are protected by a warning line, guardrail, or personnel fall arrest system.

c. Access paths shall be erected as follows:

(1) Points of access, materials handling areas, and storage areas shall be connected to the work area by a clear access path formed by two warning lines.

(2) When the path to a point of access is not in use, a rope, wire, or chain, equal in strength and height to the warning line, shall be placed across the path at the point where the path intersects the warning line erected around the work area, or the path shall be offset such that a person cannot walk directly into the work area.

27.H.17 Employees working in a roof-edge materials handling or storage area located on a roof having a slope less than or equal to 4 vertical to 12 horizontal and with edges 6 ft (1.8 m) or more above lower levels shall be protected by the use of a guardrail, safety net, or personal fall arrest system along all unprotected roof sides and edges of the area.

a. When guardrails are used at hoisting areas, a minimum of 4 ft (1.2 m) of guardrail shall be erected on each side of the access point through which materials are hoisted.

b. A chain or gate shall be placed across the opening between the guardrail sections when hoisting operations are not taking place.

c. When guardrails are used at bitumen pipe outlets, a minimum of 4 ft (1.2 m) of guardrail shall be erected on each side of the pipe.

d. When personal fall arrest systems are used, they shall not be attached to the hoist.

e. When personal fall arrest systems are used, they shall be rigged to allow the movement of employees only as far as the roof edge.

f. Materials may not be stored within 6 ft (1.8 m) of the roof edge unless guardrails are erected at the roof edge.

g. Materials that are to be piled, stacked, or grouped shall be stable and self-supporting.

SECTION 28

HAZARDOUS WASTE OPERATIONS AND EMERGENCY RESPONSE (HAZWOPER)

28.A. GENERAL.

28.A.01 This Section applies to:

a. Hazardous waste site cleanup operations performed under the Comprehensive Environmental Response, Compensation, Liability Act (CERCLA) or RCRA as specified by OSHA in 29 CFR 1910.120 and 29 CFR 1926.65 (a) (1) (i), (ii) and (iii) (e.g., site investigations, remedial action construction, treatment process operation, and maintenance at: Formerly Used Defense Sites (FUDS) projects, Installation Restoration Program (IRP) projects, Base Realignment and Closure (BRAC) projects, Formerly Used Sites Remedial Action Program (FUSRAP) projects, U.S. Environmental Protection Agency (EPA) Superfund projects, and hazardous waste site cleanup operations performed under the civil works program).

b. Facilities or construction projects holding RCRA Treatment Storage and Disposal (TSD) permits as specified by OSHA in 29 CFR 1910.120 and 29 CFR 1926.65 (a) (1) (iv).

c. Facilities or construction projects where emergency response as specified by OSHA in 29 CFR 1910.120 and 29 CFR 1926.65 (a) (1) (v) may be required.

28.A.02 Hazardous Waste Cleanup Operations.

a. SSHP. Hazardous waste site cleanup operations require development and implementation of a SSHP that shall be attached to the APP as an appendix (APP/SSHP). The APP/SSHP shall address all occupational safety and health hazards associated with site cleanup operations. All contracted work on the cleanup projects shall be performed in compliance

with the SSHP as well as the overall APP. Cleanup operations performed by in-house (Government) personnel do not require development of an APP, but shall be performed in compliance with local district safety and health policies for in-house activities and shall comply with the SSHP. Changes and modifications to the SSHP are permitted and shall be made in writing with the knowledge and concurrence of the safety and health manager (SHM) and accepted by the GDA.

b. The SSHP shall cover the elements listed in (1) through (14) in project specific detail. SSHP elements adequately covered elsewhere in the APP need not be duplicated.

(1) Site description and contamination characterization. The SSHP shall provide a description of the contamination with the exposure potential to adversely affect safety and occupational health and likely to be encountered by the on-site work activities.

(2) Hazard/Risk analysis. An AHA shall be developed for each task/operation to be performed. The AHA shall comply with the requirements in 01.A.13. The AHA shall account for all hazards (classic safety, chemical, physical, biological, ionizing radiation) likely to be encountered while performing the work.

(3) Staff organization, qualifications, and responsibilities. The following personnel are required for implementation of safety and occupational health requirements at cleanup operations.

(a) SHM. The SHM must be a Certified Industrial Hygienist (CIH), Certified Safety Professional (CSP), or Certified Health Physicist (CHP), dependent upon the contaminant-related hazards on the project (CIH for occupational health hazards, CSP for safety hazards, and CHP for ionizing radiation hazards). The SHM shall have 3 years of experience managing safety and occupational health at hazardous waste site cleanup

operations. The SHM shall enlist the support of safety and occupational health professionals with appropriate education and experience when working on sites with multiple (chemical, safety, ionizing radiation) hazards. The SHM is responsible for the following actions:

(i) Develop, maintain, and oversee implementation of the SSHP.

(ii) Visit the project as needed to audit the effectiveness of the SSHP.

(iii) Remain available for project emergencies.

(iv) Develop modifications to the SSHP as needed.

(v) Evaluate occupational exposure monitoring/air sampling data and adjust SSHP requirements as necessary.

(vi) Serve as a QC staff member.

(vii) Approve the SSHP by signature.

(b) Site safety and health officer (SSHO). The SSHO shall have 1 year of experience implementing safety and occupational health procedures at cleanup operations, and have the training and experience to conduct exposure monitoring/air sampling and select/adjust protective equipment use. The SSHO shall have the authority and is responsible for the following actions:

(i) Be present during cleanup operations to implement the SSHP.

(ii) Inspect site activities to identify safety and occupational health deficiencies and correct them.

(iii) Coordinate changes/modifications to the SSHP with the SHM, site superintendent, and contracting officer.

(iv) Conduct project specific training.

(4) Training. Personnel shall comply with the following general and project specific training requirements:

(a) General training. General training requirements apply to project personnel exposed to contaminant-related health and safety hazards. General training must comply with the following requirements:

(i) 40-hour off-site hazardous waste site instruction. Off-site instruction must comply with the 40-hour training requirements in OSHA standards 29 CFR 1910.120 and 29 CFR 1926.65.

(ii) 8-hour annual refresher training. Refresher training must comply with the requirements in OSHA standards 29 CFR 1910.120 and 29 CFR 1926.65. USACE employees must comply with local district hazardous waste refresher training policies.

(iii) 3 days of field experience under the direct supervision of a trained, experienced supervisor.

(b) Supervisory training. On-site supervisors must comply with the 8-hour supervisory training requirements in OSHA standards 29 CFR 1910.120 and 29 CFR 1926.65.

(c) Project-specific training. The following project-specific training shall be provided to workers before on-site work begins:

(i) Training specific to other sections of this manual or OSHA standards in 29 CFR 1910 and 29 CFR 1926 that are applicable to site work and operations.

(ii) Training covering each element in the SSHP.

(5) PPE. PPE used to protect workers from site-related hazards (construction safety and health and contaminant-related) shall comply with requirements specified in Section 5.

(6) Medical surveillance. All personnel performing on-site work that will result in exposure to contaminant-related health and safety hazards shall be enrolled in a medical surveillance program that complies with OSHA standards 29 CFR 1910.120 (f) and 29 CFR 1926.65 (f). Certification of medical surveillance program participation shall be appended to the SSHP. The certification shall include: employee name, date of last examination, and name of examining physician(s). The required written physician's opinion shall be made available upon request to the GDA. All medical records shall be maintained in accordance with 29 CFR 1910.1020. USACE employees must comply with USACE medical surveillance policies.

(7) Exposure monitoring/Air sampling program. Exposure monitoring and air sampling shall be performed to evaluate effectiveness of prescribed PPE and to evaluate worker exposure to site-related contaminants and hazardous substances used in the cleanup process. Project-specific exposure monitoring/air sampling requirements shall comply with requirements specified Section 6.

(8) Heat and cold stress. The procedures and practices for protecting workers from heat and cold stress shall comply with the requirements 06.J.

(9) Standard operating safety procedures, engineering controls, and work practices. Safety and occupational health

procedures, engineering controls and work practices shall be addressed for the following as appropriate:

(a) Site rules/prohibitions (buddy system, eating/drinking/ smoking restrictions, etc.).

(b) Work permit requirements (radioactive work, excavation, hot work, confined space, etc.).

(c) Material handling procedures (soil, liquid, radioactive materials, spill contingency).

(d) Drum/container/tank handling (opening, sampling, overpacking, draining, pumping, purging, inerting, cleaning, excavation and removal, disassembly and disposal, spill contingency.

(e) Comprehensive AHA of treatment technologies employed at the site.

(10) Site control measures. Work zones shall be established so that on-site activities do not spread contamination. The site shall be set up so that there is a clearly defined exclusion zone (EZ) and a clearly defined support zone (SZ) with a contamination reduction zone (CRZ) as a transition between the EZ and SZ.

(11) Personal hygiene and decontamination. A personal hygiene and decontamination station shall be set up in the CRZ for personnel to remove contaminated PPE and to wash when exiting the EZ.

(12) Equipment decontamination. An equipment decontamination station shall be set up in the CRZ for equipment to be decontaminated when exiting the EZ.

(13) Emergency equipment and first aid. The equipment and personnel required for first aid and CPR shall comply with the requirements in Section 3. Emergency equipment

required to be on-site shall have the capacity to respond to project-specific emergencies. Site emergencies may require (but should not be limited to) PPE and equipment to control fires, leaks and spills, or chemical (contaminant or treatment process) exposure.

(14) Emergency response and contingency procedures. An ERP shall be developed that addresses the following emergency response and contingency procedures:

(a) Pre-emergency planning. An agreement shall be established between the Contractor (or the GDA for in-house work), local emergency responders, and the servicing emergency medical facility that specifies the responsibilities of on-site personnel, emergency response personnel, and the emergency medical facility in the event of an on-site emergency.

(b) Personnel and lines of authority for emergency situations.

(c) Criteria and procedures for emergency recognition and site evacuation (e.g., emergency alarm systems, evacuation routes and reporting locations, site security).

(d) Decontamination and medical treatment of injured personnel.

(e) A route map to emergency medical facilities and phone numbers for emergency responders.

(f) Criteria for alerting the local community responders.

c. Should any unforeseen hazard become evident during the performance of work, the SSHO shall bring such hazard information to the attention of the SHM and the GDA (both verbally and in writing) for resolution as soon as possible. In the interim, necessary action shall be taken to reestablish and maintain safe working conditions.

28.A.03 RCRA TSD facilities. Requirements specified in 29 CFR 1910.120 and 29 CFR 1926.65(p), and the terms of the facility RCRA permit shall be complied with for operations at TSD facilities.

28.A.04 Facility or construction project emergency response. Facilities or construction projects using, storing, or handling hazardous substances and whose employees will be engaged in emergency response operations shall comply with 29 CFR 1910.120 (q) and 29 CFR 1926.65 (q) (a) (1) (v) when a hazardous substance release may result in exposure causing adverse affects on the health or safety of employees. Facilities/construction projects that will evacuate their employees from the danger area when an emergency occurs, and that do not permit any of their employees to assist in handling the emergency, are exempt from this requirement if they provide an emergency action plan in accordance with 29 CFR 1910.38(a) and 29 CFR 1926.35.

a. If applicable, the facility/construction site manager shall develop and implement an ERP that addresses the following items:

(1) Operations. Identify the operations requiring the use of hazardous substances.

(2) Pre-emergency planning with local emergency responders. Describe emergency response agreements, including roles and responsibilities, made with local emergency responders for hazardous material response, fire, rescue, emergency medical care, and security and law enforcement.

(3) Personnel roles, lines of authority, training, and communication. Describe key personnel roles, command structure/lines of authority and communications requirements for responding to construction site or facility-specific hazardous substance releases.

(4) Emergency recognition and prevention. Explain the likely emergency scenarios for the construction project or facility, and explain how employees can expect to identify and recognize emergency scenarios.

(5) Safe distances and places of refuge. Select safe places of refuge to be used in emergency situations, identify these locations in the ERP, and require employees to report to selected places of refuge during emergencies.

(6) Site security and control. Describe how the facility will be secured and describe access to the site controlled during emergencies.

(7) Evacuation routes and procedures. Describe and map out the evacuation routes to safe places of refuge and any special safety and health procedures employees must follow while evacuating the facility.

(8) Decontamination. Develop and describe plans and procedures for decontaminating personnel if/when they come in contact with leaking hazardous substances.

(9) Emergency medical treatment and first aid. Explain how emergency medical treatment and first aid will be provided in the event of a hazardous substance spill.

(10) Emergency alerting and response procedures. Describe how personnel will be alerted in the event of a hazardous substance spill, and describe how facility personnel must response after emergency alerting procedures are initiated.

(11) Critique of response and follow-up. Describe how lessons learned from emergency response will be documented and used to improve future emergency response actions.

(12) PPE and emergency equipment. Describe the PPE and emergency equipment to be made available and how it is to be used by employees for evacuation. Describe the PPE and emergency response equipment that will be available for use by response personnel at the facility.

(13) ERT. Designate a facility-specific ERT. Describe the team's emergency responsibilities. Describe the team's responsibilities for interacting with local emergency response providers (i.e., where the facility team's responsibilities end and the local response providers begin).

b. Personnel training requirements. At a minimum, ERT personnel at the facility or construction project shall be trained to the "First Responder Operations Levels" specified in 29 CFR 1910.120 (q)(6)(ii). Response above and beyond defensive requires additional training and highly qualified supervision under 29 CFR 1910.120(q) and 29 CFR 1926.65(q) and must be specified on a project specific basis.

c. ERT responsibilities. The ERT shall, at a minimum, respond in a defensive manner to hazardous substance releases at the facility or construction project using the equipment and procedures specified in the ERP for defensive response. The ERT shall only provide response services beyond defensive if qualified and only according the procedures specified in the facility or construction project-specific ERP.

SECTION 29

BLASTING

29.A GENERAL

29.A.01 Prerequisites.

a. Permission in writing shall be obtained from the GDA before explosive materials are brought on the job site. Periodic replenishment of approved supplies does not require written approval.

b. Prior to bringing explosives on site, the contractor shall develop a blasting safety plan. As a minimum, this plan shall be accepted by the GDA and include the following:

(1) List the names, qualifications, and responsibilities of personnel involved with explosives, and

(2) Delineate the Contractor's requirements for handling, transportation, and storage of explosives; employee training programs; loading procedures; safety signals; danger area clearance; methods for securing the site; vibration and damage control; post-blast inspection and misfire procedures; provisions for disposal of explosives, blasting agents, and associated material; and post-blast ventilation requirements.

29.A.02 The transporting, handling, storage, and use of explosives, blasting agents, and blasting equipment shall be directed and supervised by a person of proven experience and ability in blasting operations in accordance with ANSI A10.7; 29 CFR 1910.109; 29 CFR 1926, Subpart U; 27 CFR 555; the manufacturers, the Institute of Makers of Explosives (IME), and, where applicable, DOD explosives safety standards. **>** ***See 26.J***

29.A.03 All persons working with explosives shall be in good physical condition and be able to understand and give written and verbal orders.

29.A.04 Warning signs shall be provided at points of access to blasting area.

29.A.05 Operations involving the handling or use of explosive materials shall be discontinued and personnel moved to a safe area during the approach or progress of a thunderstorm or dust storm; controls will be established to prevent accidental discharge of electric blasting caps from extraneous electricity.

29.A.06 Blasting operations near overhead power lines, communications lines, utility services, or other structures shall not be carried on until the operators and/or owners have been notified and measures for safe control have been taken.

29.A.07 All loading and firing shall be directed and supervised by one designated person.

29.A.08 A positive system to detect and measure the probability of lightning or massive static electrical discharges shall be used.

29.A.09 Before adopting any system of electrical firing, a thorough survey shall be made for extraneous currents and all dangerous currents shall be eliminated before any holes are loaded.

29.A.10 Blasts using electric detonators shall be fired with an electric blasting machine or a properly designed power source.

a. Blasts using non-electric detonators shall be fired by a blasting machine or starting device prescribed by the manufacturer.

b. When blasting near radar or radio transmission facilities or near electrical energy sources where testing has shown that RF energy or stray electrical current may present a hazard to

electrical blasting, an approved non-electrical initiation system shall be employed.

c. When electric detonators are used, leg wires shall be short circuited (shunted) until connected into the circuit for firing.

29.A.11 Detonating cord shall be initiated by non-electric detonator (cap and fuse), electric detonator, shock tube detonator or gas initiated detonator in accordance with the manufacturer's recommendation.

29.A.12 Delay electric detonators, non-electric delay detonators, detonating cord connectors, or sequential blasting machines shall be used for all delayed blasts; the practice shall conform to the manufacturer's recommendations.

29.A.13 Blasting machines.

a. Blasting machines shall be operated, maintained, tested, and inspected as prescribed by the manufacturer.

b. Blasting machines shall be tested prior to use and periodically thereafter as prescribed by the manufacturer.

c. Blasting machines shall be secured and accessible only to the blaster; only the blaster shall connect the leading wire to the machine.

29.A.14 When energy for blasting is taken from power circuits, the voltage shall not exceed 550 volts. The wiring controlling arrangements shall conform to the following (see Figures 29-1 and 29-2):

a. The blasting switch shall be an ungrounded UL (or other nationally-recognized testing laboratory) listed, enclosed, externally operated double-pole double-throw switch that, when locked in the open position, will shunt the firing lines.

FIGURE 29-1

POWER FIRING SYSTEMS

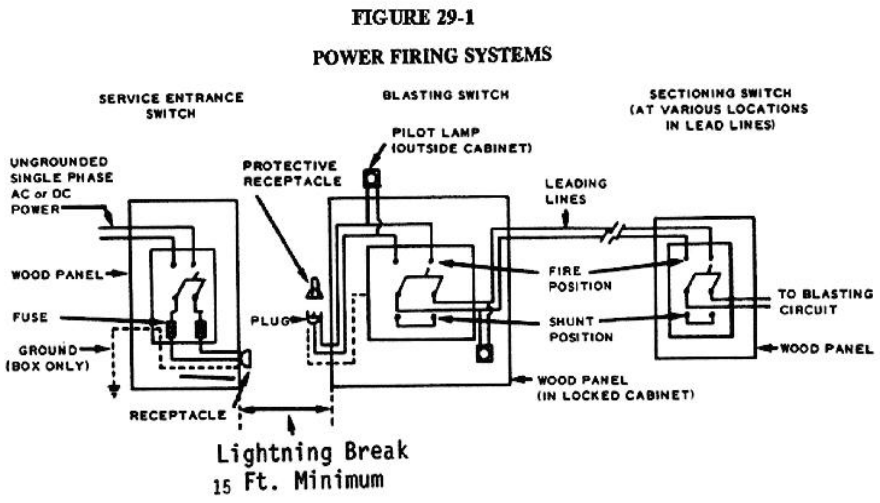

Power Firing System for Series and Parallel Series Firing
(No Arcontroller)

FIGURE 29-2

RECOMMENDED INSTALLATION OF SHOOTING STATION AND ACCESSORY ARRANGEMENT FOR USING ARCONTROLLER

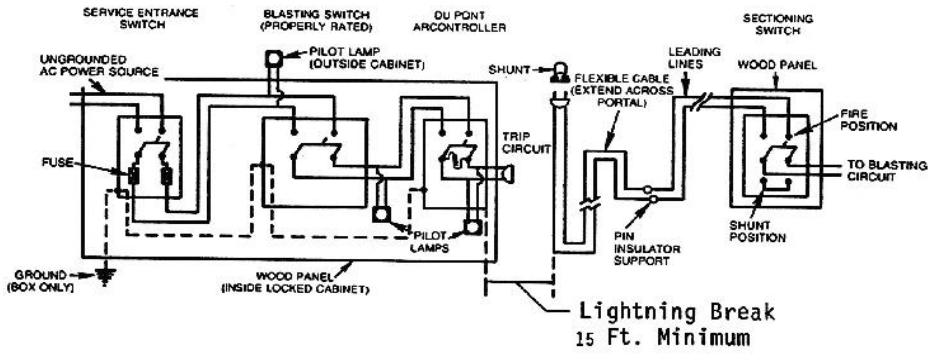

Recommended Installation of Shooting Station and Accessory Arrangement
for Using Arcontroller

b. A grounded switch shall be installed between the blasting switch and the power circuit at a distance not less than 15 ft (4.5 m) from the blasting switch.

c. A lightning gap of at least 15 ft (4.5 m) shall be provided between the two switches; the gap connection shall be made by cable, plug, and receptacle.

29.A.15 The cable between switches shall be disconnected and both switches shall be locked in the open position immediately after firing the shot.

29.A.16 Keys to the switches shall remain in the possession of the blaster at all times.

29.A.17 Insulated solid core wires of an appropriate gage in good condition shall be used for all lines.

29.A.18 Sufficient firing line shall be provided to permit the blaster to be located at a safe distance from the blast.

29.A.19 Mechanized equipment (including drills) shall not be operated within 50 ft (15.2 m) of a loaded hole.
(EXCEPTION: Mechanized equipment may be permitted to operate within 50 ft (15.2 m) of a loaded hole when placing blasting mats or back covering.)

29.A.20 The use of black powder shall be prohibited.

29.A.21 No explosive materials shall be abandoned.

29.A.22 All refuse from explosive loading such as empty boxes, paper, and fiber packing shall not be used again for any purpose, but shall be destroyed by burning at an approved location.

29.A.23 Storage of explosives.

a. The storage of explosives shall be in accordance with requirements of the Bureau of Alcohol, Tobacco, and Firearms

(as outlined in 27 CFR 555, Subpart K) or the State in which they are stored.

b. An accurate running inventory of all explosives and blasting agents stored at the project shall be maintained: two copies shall be maintained - one at the magazine and one in a facility which is at least 50 feet (15.2 m) from the magazine.

29.B TRANSPORTATION OF EXPLOSIVE MATERIALS

29.B.01 Transportation of explosives by the following modes shall be in accordance with the prescribed federal regulations and the applicable state requirements.

a. Transportation of explosive materials over public highways shall be in accordance with DOT requirements.

b. Marine transportation of explosive materials shall be in accordance with USCG requirements.

c. Transportation of explosive materials by aircraft shall be in accordance with FAA requirements.

29.B.02 Vehicles used for transportation of explosive materials shall not be loaded beyond their rated capacity and the explosive materials shall be secured to prevent shifting of load or dislodgment from the vehicle; when explosive materials are transported by a vehicle with an open body, a magazine or closed container shall be securely mounted on the bed to contain the cargo.

29.B.03 All vehicles transporting explosive materials shall display all placards, lettering, and/or numbering required by DOT.

29.B.04 Explosive materials and blasting supplies shall not be transported with other materials or cargoes. Blasting caps (including electric) shall not be transported in the vehicle or conveyance with other explosives unless the conditions of 49 CFR 177.835(g) are met.

29.B.05 Personnel.

a. All vehicles for transportation of explosive materials shall be in the charge of and operated by a person who is physically fit, careful, reliable, able to read and understand safety instructions, and not under the influence of intoxicants or narcotics.

b. Only the authorized driver and his or her properly trained helper shall be permitted to ride on any conveyance transporting explosive materials or detonators.

29.B.06 Vehicles used in the transportation of explosives shall be substantially constructed, in good repair, and shall have tight beds to prevent explosives from falling from the vehicle. The ends and sides of vehicles shall be high enough to prevent containers from falling off.

29.B.07 Explosives shall not be exposed to sparking metal during transportation. When steel or part steel bodies are used, non-sparking cushioning materials shall separate the containers of explosives from the metal.

29.B.08 No spark-producing tools, carbides, oils, matches, firearms, electric storage batteries, flammable substances, acids, or oxidizing or corrosive compounds shall be carried in the bed or body of any vehicle transporting explosive materials.

29.B.09 Vehicles transporting explosive materials shall be equipped with one or more fire extinguishers having a rating of 10-B:C and placed at strategic points.

a. The extinguishers shall be of a type listed by a nationally-recognized testing laboratory and shall be ready for use.

b. The driver will be trained in the use of the extinguisher.

29.B.10 A vehicle containing explosive materials shall not be taken into a garage or repair shop, parked in congested areas, or stored at any time in a public garage or similar building.

29.B.11 Vehicles transporting explosive materials shall be operated with extreme care. Full stops shall be made at approaches to all railroad crossings and main highways, and the vehicles shall not proceed until it is known that the way is clear.

29.B.12 No vehicle shall be refueled while explosive materials are on the motor vehicle except in an emergency.

29.B.13 Persons employed in the transportation, handling, or other use of explosive materials shall not smoke or carry on their persons or in the vehicle, matches, firearms, ammunition, or flame-producing devices.

29.B.14 Provision shall be made for safe transfer of explosive materials to magazine vessels including substantial ramps or walkways free of tripping hazards.

29.B.15 Vehicles transporting explosive materials shall not be left unattended.

29.B.16 The hoist operator shall be notified before explosive materials are transported in a shaft conveyance.

29.B.17 Explosive materials shall be hoisted, lowered, or conveyed in a powder car. No other materials, supplies or equipment shall be transported in the same conveyance at the same time.

29.B.18 No person shall ride in any shaft conveyance transporting explosive materials. Loading and unloading shall be accomplished only when the conveyance is stationary.

29.B.19 No explosive materials shall be transported on any locomotive. At least two car lengths shall separate the locomotive from the powder car.

29.B.20 No explosive materials shall be transported on a man haul trip.

29.B.21 The car or conveyance containing explosive materials shall be pulled, not pushed, whenever possible.

29.B.22 The powder car or conveyance built for transporting explosive materials shall bear a reflectorized sign with a sharply contrasting background on each side with the word **"EXPLOSIVES"** in letters not less than 4 in (10.1 cm) in height.

29.C HANDLING OF EXPLOSIVE MATERIALS

29.C.01 There shall be no smoking, open lights, or fire of any kind within 50 ft (15.2 m) of any area where explosives are being handled. No source of ignition, except necessary means to light fuses or fire electric detonators, shall be permitted in an area containing loaded holes.

29.C.02 Containers of explosive materials shall be opened only with non-sparking tools or instruments. Metal slitters may be used for opening fiberboard boxes, paper bags or plastic tubes.

29.C.03 Explosive materials shall be removed from containers only as they are needed for immediate use.

29.C.04 Explosive materials and detonators or primers shall be separated and taken to the blasting area in original containers, Type 3 Magazines, or containers prescribed by 49 CFR 177.835.

29.C.05 Primers shall not be made up in excess of immediate need for holes to be loaded.

29.C.06 Primers shall not be made up in or near magazines or excessive quantities of explosive materials.

29.C.07 After loading of a blast is completed, all excess explosive materials and detonators shall be removed to a safe location or returned at once to the storage magazines, observing the same rules as when being conveyed to the blasting area.

29.C.08 The quantity of explosive materials taken to an underground loading area shall not exceed the amount estimated to be necessary for the blast.

29.C.09 Detonators and explosive materials shall be taken separately into pressure working chambers.

29.D ELECTROMAGNETIC RADIATION

29.D.01 Blasting operations or storage of electrical detonators shall be prohibited in vicinity of operating RF transmitters or other RF producing devices except where the clearances in ANSI C95.4 can be maintained.

29.D.02 When necessary to perform blasting operations at a distance less than those shown in ANSI C95.4 tables, an approved non-electric initiation system shall be used.

29.D.03 Mobile radio transmitters, which are less than 100 feet (30.4 m) away from electric blasting caps in other than original containers, shall be de-energized and effectively locked, except in blasting areas where a non-electric initiation system as described in 29.A.11 is used.

29.E VIBRATION AND DAMAGE CONTROL

29.E.01 Blasting operations in or adjacent to cofferdams, piers, underwater structures, buildings, structures, or other facilities shall be carefully planned with full consideration for all forces and conditions involved.

29.E.02 Prior to initiation of vibration controlled blasting operations, a written plan for monitoring the operations shall be established.

29.E.03 When appropriate, owners, occupants, and the public shall be notified of the nature of blasting operations to be undertaken and controls to be established.

29.E.04 Where vibration damage may occur, energy ratios and peak particle velocities shall be limited in accordance with state requirements or the requirements in Table 29-1, whichever is more stringent. When any recording indicates either the energy ratio or peak particle velocity limits have been exceeded, blasting shall be suspended and the designated authority (Government and Contractor) shall be immediately notified; blasting shall not be resumed until the probable cause has been determined and corrective measures taken.

TABLE 29-1

ENERGY RATIO AND PEAK PARTICLE VELOCITY FORMALAE

The maximum total energy ratio (ER) shall be limited to 1.0, calculated as follows: $ER = (3.29FA)^2$ where: F = frequency in cycles per second A = amplitude in inches The total energy ratio is equal to the arithmetic sum of the energy ratios in the 3 mutually perpendicular planes of motion in the vertical and horizontal directions at any one instant of time.
The maximum total peak particle velocity (PV) shall be limited to 1.92, calculated as follows: $PV = A/t$ where: A = amplitude in inches t = time in seconds The total peak particle velocity is equal to the vector sum of the particle velocities in the 3 mutually perpendicular planes of motion in the vertical and horizontal directions at any one instant of time.

29.E.05 Where required by State regulations, scaled distances shall be determined before each shot and included in the records. Scaled distances shall not exceed limitations set by the State.

29.E.06 Air blast pressure exerted on structures resulting from blasting shall not exceed 133 dB (0.013 psi).

29.E.07 The monitoring, recording, and interpreting of vibrations shall be by qualified personnel. Records and interpretations shall be furnished to the GDA.

29.F DRILLING AND LOADING

29.F.01 All drill holes shall be sufficiently large enough to freely allow for the insertion of the explosives.

29.F.02 Drilling shall not be done in an area already blasted until remaining "bootlegs" are examined for unexploded charges and the total area has been examined to make sure that there are no unexploded charges remaining.

a. Never insert a drill, pick, or bar into bootlegs even if examination fails to disclose explosives.

b. When misfires have occurred and drilling must be done in an area where undetonated holes may exist, holes shall not be drilled where there is danger of intersecting a misfired hole.

c. All drilling necessary to neutralize misfires must be done under the supervision of a competent person who has a working knowledge of the explosive materials involved and is familiar with the conditions under which the misfired holes were drilled, loaded, primed, and initiated, and is familiar with the drilling equipment capabilities that will be used during the neutralization.

29.F.03 Drilling and loading operations shall not be carried on in the same area. Drilling shall be separated from loaded holes by at least the depth of the loaded hole but in no case less than 50 ft (15.2 m).

29.F.04 No person shall be allowed to deepen drill holes that have contained explosives or blasting agents.

29.F.05 Holes shall not be drilled so that they disturb or intersect a loaded hole.

29.F.06 See Section 16.M for earth drilling requirements.

29.F.07 The loading or loaded area shall be kept free of any equipment, operations, or persons not essential to loading; no vehicle traffic shall be permitted over loaded holes; the blast site shall be guarded or barricaded and posted with danger signs to restrict unauthorized entry.

29.F.08 No holes shall be loaded except those to be fired in the next round of blasting; after loading, all remaining explosive materials and detonators shall be immediately returned to an authorized magazine; no explosive materials or loaded holes shall be left unattended at the blast site at any time.

29.F.09 Loading of sprung or jet-pierced holes shall be prohibited until it is established that the hole has cooled sufficiently to allow loading.

29.F.10 No explosive shall be loaded or used underground in the presence of combustible gases or combustible dusts unless the conditions of use have been thoroughly identified and accepted, in writing, as safe by a competent person qualified by a thorough knowledge of the factors to be evaluated or by the written permission of the authority having jurisdiction where an authority exercises jurisdiction.

29.F.11 Cartridges shall be primed only in the number required for a single round of blasting.

29.F.12 No detonator shall be inserted in explosive materials which do not have a cap well without first making a hole in the cartridge with a non-sparking punch of proper size, or the appropriate pointed handle of a cap crimper.

29.F.13 Cartridges shall be seated by even steady pressure only.

29.F.14 Tamping shall be done with wood rods without exposed metal parts. Non-sparking metal connectors may be used for joint poles. An approved plastic tamping pole may also be used.

29.F.15 Springing boreholes.

a. A borehole shall never be sprung when it is adjacent to or near a hole that is loaded.

b. Flashlight batteries shall never be used as a power source to replace a blasting machine when springing boreholes.

29.F.16 Use of detonating cord.

a. Detonating cord shall be handled and used with the same respect and care given other explosives. Care shall be made to avoid damaging or severing cord during and after loading and hooking-up.

b. When using a detonating cord down line, after the primer is loaded in the hole, the detonating cord shall be cut from the supply reel before loading the rest of the charge.

c. Detonating cord connections shall be positive in accordance with recommended methods. Knot or other cord-to-cord connections shall be made only with detonating cord in which the explosive core is dry.

d. All detonating cord trunk lines and branch lines shall be free of loops, sharp kinks, or angles that direct the cord back toward the oncoming line of detonation.

e. When connecting a detonator to detonating cord, the detonators shall be taped or otherwise attached securely along the side or the end of the detonating cord, with the end of the detonator containing the explosive charge pointing in the direction in which the detonation is to proceed.

f. Detonators for firing the trunk line shall not be brought to the loading area nor attached to the detonating cord until everything else is in ready for the blast.

29.F.17 The blaster shall keep an accurate, up-to-date record of explosives, blasting agents, and blasting supplies used in a blast.

29.F.18 Loaded holes shall be stemmed to the collar with non-combustible material.

29.F.19 All loaded holes or charges shall be checked and located and all detonating cord connections shall be inspected before firing the blast.

29.F.20 All charges shall be covered with blasting mats or back covered before firing where blasting may cause injury or damage by flying rock or debris. Where mats are used, care shall be taken to protect electric blasting circuits.

29.G WIRING

29.G.01 In any blast using electric detonators, all blasting caps shall be from the same manufacturer.

29.G.02 Wiring.

a. Bus wires shall be single solid wires of sufficient current carrying capacity.

b. The insulation on all firing lines shall be adequate and in good condition.

29.G.03 The number of electric blasting caps in a circuit shall not exceed the capacity of blasting machine or power source.

29.G.04 A power circuit used for firing electric detonators shall not be grounded.

29.G.05 Whenever the possibility exists that a leading wire might be thrown onto a live power source by the force of the explosion, care shall be taken to see that the total length of wires is kept too short to contact the source or that the wires are securely anchored to the ground. Alternatively, de-energize the live power until it is certain during the post blast inspection that the lines have not crossed. If these requirements cannot be met, a non-electric system shall be used.

29.G.06 The manufacturer's shunt shall not be removed from the cap leg wires until the cap is connected to the lead line or to another cap in preparation for the assembly of two or more caps into a series circuit or when the cap is to be tested.

29.G.07 No lead wire shall be connected to the circuit until it has been grounded to dissipate any static charge.

29.G.08 The circuit, including all caps, shall be tested with an approved blasting instrument (blasting galvanometer, blasting ohmmeter, blaster's ohmmeter, or blaster's multimeter) before being connected to a firing line.

29.G.09 No firing line shall be connected to a blasting machine or other power source until the shot is to be fired. The firing line shall be checked with an approved blasting instrument before being connected to the blasting machine or other power source. **> *See 29.G.08***

29.G.10 When a single series of caps is to be fired, or a number of series of caps is to be fired as a series-in-parallel circuit, the resistance of the circuit shall be checked with an approved blasting instrument. **> *See 29.G.08***

29.G.11 For series-in-parallel circuits, each series shall be "balanced" (i.e., have the same resistance).

29.G.12 Each series circuit shall be separately tested for two readings:

a. To ensure that the series is complete; and

b. To ensure that each series shows the same resistance and that this resistance is as close to the calculated resistance for such a series of caps as the testing instrument will read. If the first reading shows a series to be incomplete, the faulty cap or connection shall be located and corrected. If the second reading shows incorrect resistance, the cause shall be found and corrected.

29.H FIRING

29.H.01 Prior to the firing of a shot, all persons in the danger area shall be warned of the blast and ordered to a safe distance from the area. Blasts shall not be fired until it is certain that every person has retreated to a safe distance and no one remains in a dangerous location.

29.H.02 Prior to the firing of a shot, a competent flagperson shall be posted at all access points to danger areas.

29.H.03 Prior to the firing of a shot, drill boats and other vessels shall be moved a safe distance from the danger area.

a. Prior to and while the drill boat or vessel is being moved from the danger area, a series of short signals by horn or whistle similar to the usual navigation warning signals shall be given.

b. No blast shall be fired while any vessel under way is closer than 1,500 ft (457.2 m) to the underwater blasting area. Those on board vessels or craft moored or anchored within 1,500 ft (457.2 m) must be notified before a blast is fired.

c. No blast shall be fired closer than 250 ft (76.2 m) to a boat or vessel containing an explosive magazine; personnel engaged in drilling operations on another drill boat within 500 ft (152.4 m) shall leave the drill frames for cover if any holes have been loaded.

d. No blast shall be fired while any swimming or diving is in progress near the blasting area.

e. Whenever a drill boat is moved from the drilling setting, all loaded under water holes shall be fired.

29.H.04 Safety signals.

a. All blasting operations shall use the following safety signals:

(1) **WARNING SIGNAL** - a one-minute series of long audible signals 5 minutes prior to blast signal;

(2) **BLAST SIGNAL** - a series of short audible signals 1 minute prior to the shot; and

(3) **ALL CLEAR SIGNAL** - a prolonged audible signal following the inspection of blast area.

b. The safety signals shall be given by use of a compressed air whistle, a horn, or equivalent means, and shall be clearly audible at the most distant point in the blast area. The boat whistle on a drill boat shall not be used as a blasting signal.

c. The code for safety signals and warning signs and flags shall be posted at all access points.

d. Employees shall be made familiar with the signals and instructed accordingly.

29.H.05 The person making leading wire connections shall fire the shot. All connections shall be made from the borehole back to the

source of firing current and the leading wire shall remain shorted and not be connected to the blasting machine or other source of current until the charge is to be fired.

29.H.06 After firing an electric blast, the leading wires shall be immediately disconnected from the power source and shunted.

29.H.07 When firing a circuit of electric blasting caps, care shall be exercised to ensure that an adequate quantity of delivered current is available in accordance with the manufacturer's recommendations.

29.I POST-BLAST PROCEDURES

29.I.01 Immediately after blast has been fired, the firing line shall be disconnected from the blasting machine or power source. Power switches shall be locked open. Atmospheres in confined areas shall be tested and/or ventilated after blast.

29.I.02 An inspection shall be made by the blaster to determine that all charges have been exploded. All wires shall be traced and search made for unexploded cartridges.

29.I.03 Other persons shall not be allowed to return to the area of the blast until an "all clear" signal is given.

29.I.04 Loose pieces of rock and other debris shall be scaled down from the sides of the face of excavation and the area made safe before proceeding with the work.

29.I.05 Misfires.

a. Misfires shall be handled under the direction of the blaster. The blaster shall determine the safest method for handling the hazards of misfires (some misfires may require consultation with the supplier or manufacturer of the explosive material).

b. If a misfire is found, the blaster shall provide proper safeguards for excluding all employees, except those necessary to do the work, from the danger zone.

c. No other work shall be done except that necessary to remove the hazard of the misfire. Only those employees necessary to do the work shall remain in the danger zone.

d. No drilling, digging, or picking shall be permitted until all missed holes have been detonated or the blaster has approved that work can proceed.

29.J UNDERWATER BLASTING

29.J.01 A blaster shall conduct all blasting operations. No shot shall be fired without his or her approval.

29.J.02 Loading tubes and casings of dissimilar metals shall not be used because of possible electric transient currents from galvanic action of the metals and water.

29.J.03 Only water-resistant blasting caps and detonating cords shall be used for all marine blasting. Loading shall be done through a non-sparking metal loading tube when necessary.

29.J.04 Blasting flags shall be displayed.

29.J.05 The storage and handling of explosive materials aboard vessels used in underwater blasting operations shall be according to provisions in 29.A and 29.C.

29.J.06 When more than one hole is loaded to be fired underwater, a steel shot line shall be anchored and floated over the row of loaded holes.

a. The detonation down line from each loaded hole shall be tied to the steel line and the loose end shall be tied to the detonation trunk line.

b. After the trunk line fires, the steel shot line shall be inspected for misfires. Misfires shall be handled in accordance with the requirements of 29.I.05.

29.J.07 When drilling near or adjacent to a loaded hole, drilling shall be limited to vertical holes only. Drilling shall be separated from loaded holes by the depth of water plus the depth of the loaded hole.

a. If a solid casing or drill mast - vertically plumbed with an inclinometer - is extended from the barge and firmly seated on bedrock, the distance between a loaded hole and one being drilled shall be 1/3 the depth of the hole, with a minimum of 8 ft (2.4 m) between the loaded hole and the one being drilled.

b. Drilling shall be halted to check alignment with an inclinometer every 4 ft (1.2 m) of hole depth.

SECTION 30

CONTRACT DIVING OPERATIONS

30.A GENERAL

30.A.01 All contract diving operations shall be performed in accordance with this manual. Any failure to meet the requirements of this Section will be cause for rejection or cessation of operations. Unless otherwise delegated in this section, requests for variance to the requirements of this section must be submitted in writing to and approved by the HQUSACE Safety and Occupational Health Office.

30.A.02 The USACE Command, at their discretion, may elect to implement and enforce more conservative diving requirements than stated herein, but under no circumstances will the operational requirements be less than specified in this Section.

30.A.03 Diving shall not be used as a work method if the work objective can be more safely and efficiently accomplished by another means (e.g., using remote controlled television systems in lieu of divers).

30.A.04 Surface-supplied air (SSA) shall be used whenever possible in accordance with the practical constraints of diving operations. All working dives requiring communications between the divers and topside to direct crane load movements, etc., shall be performed in SSA mode. A tender/diver shall be stationed at the underwater point of entry when diving is conducted in enclosed or physically confining spaces.

30.A.05 Live boating will not be used without prior specific acceptance by the District Diving Coordinator (DDC).

30.A.06 Training documentation shall be in compliance with 29 CFR 1910.410 and shall show that the dive team members have successfully completed training to the appropriate level (e.g., SSA divers certificate, surface supplied mixed-gas diver certificate). Such training shall:

a. Be from a commercial diving school within a particular State, military school, Federal school (e.g., USACE), or an Association of Commercial Diving Educators (ACDE) accredited school, or

b. Meet the requirements contained in ANSI/ACDE-01.

30.A.07 Any employed diver/team member may substitute a training certificate with a valid "Association of Diving Contractors (ADC) Commercial Diver Certification Card" for the appropriate training level.

30.A.08 Contractors shall provide evidence that each dive team member has training and experience consistent with the performance requirements of the scope of work. As a minimum, each team member shall have at least 1 year of commercial experience in the applicable position; divers shall have completed at least four (4) working dives with similar decompression techniques as in the contract, using the particular diving techniques and equipment to be used under the contract. Divers shall demonstrate that at least one (1) of the four (4) qualification dives was performed in the last 6 months prior to the contract award date.

30.A.09 Each dive team member shall have current certification in CPR, first aid, and use of emergency oxygen systems. Evidence of this will be a photocopy of the certificates.

30.A.10 The Contractor shall submit certification, signed by a licensed physician, stating that each diver has been medically examined within the previous 12 months and has been determined fit and approved to dive. The dive medical examination will be repeated every 12 months with verification submitted to the DDC.

30.A.11 Divers will wait at least 12 hours before flying after any dive: this interval should be extended to 24 hours following multiple days of repetitive dives.

30.A.12 Contract diving operations will be monitored and/or inspected by USACE employees who are certified as divers, diving supervisors, or diving inspectors through USACE sponsored training courses; however, use of trained monitors/inspectors with

other credentials will be considered on a case-by-case basis and approved in writing by the DDC.

30.A.13 When diving at altitudes of 1000 ft (304.8 m) or more of elevation above sea level, Contractors shall use appropriate high altitude decompression tables that compensate for the increased elevation.

30.A.14 The following submittals are required for all diving operations. Additional submittals may be required depending on the scope of the diving operation. All submittals will be made to the Contracting Officer and will be reviewed and found acceptable by the DDC prior to start of diving operations.

a. Contractor's Safe Practices Manual. **> See 30.A.16**

b. Dive Operations Plan(s). **> See 30.A.17**

c. AHA. **> See 30.A.18**

d. Emergency Management Plan. **> See 30.A.19**

e. Dive Personnel Qualifications. **> See 30.A.06, 07 & 08**

30.A.15 A diving operations plan, AHA, and emergency management plan will be developed for each separate diving operation. These documents will be submitted to the DDC and the Safety and Occupational Health Office Diving Safety Representative for review and found acceptable prior to commencement of diving operations and be at the diving location at all times. Each of these documents will become a part of the project file. Penetration diving, contaminated environment diving, dives outside the no decompression limits, and in areas where differential pressure entrapment hazards exist, will be specifically addressed in each document when they are anticipated as part of the diving operation.

30.A.16 Safe practices manual. Contractors shall develop and maintain a safe practices manual that encompasses the Contractor's entire diving program. The safe practices manual shall be available at all times to the Government representative and all

dive team members at each diving location. The safe practices manual shall include, as a minimum, the following:

a. Safety procedures and checklists;

b. Assignments and responsibilities of dive team members;

c. Equipment certifications, procedures, and inspection checklists;

d. Emergency procedures for fire, equipment failure, adverse weather conditions, and medical illness or injury;

e. Requirements for inspections;

f. A complete copy of OSHA, 29 CFR 1910, Subpart T, and the Contractor's proposed method of complying with each of its pertinent parts;

g. U.S. Navy Standard Air Decompression Table;

h. A sample of the diving log sheets to be used under the contract;

i. A sample of the repetitive dive worksheets or equivalent (dive profile method) to be used under the contract;

j. U.S. Navy Table of No-Decompression Limits and Repetitive Group Designation for No-Decompression Air Dives;

k. U.S. Navy Residual Nitrogen Timetables for Repetitive Air Dives;

l. An outline of the medical qualifications required for divers to be employed under the contract. As a minimum, each diver shall meet the certification requirements specified in 29 CFR 1910, Subpart T; and

m. An outline of administrative and recordkeeping procedures.

30.A.17 Dive Operations Plan. As a minimum the plan will contain the following:

a. Name of Contractor (and diving subcontractor if applicable);

b. Contract number;

c. Date of dive plan submission;

d. Name of diving supervisor preparing the dive plan;

e. Names and duties of dive team members, including diving supervisor;

f. List of diving equipment to be used;

g. Type of diving platform to be used;

h. Detailed description of the mission;

i. Date(s), time(s), duration, and location of operation;

j. Diving mode used (SCUBA, SSA, and snorkeling) including a description of the backup air supply, as required;

k. Nature of work to be performed by the divers, including tools used and materials to be handled or installed;

l. Surface and underwater conditions, to include visibility, temperature, currents, etc. Thermal protection will be considered as appropriate;

m. Maximum single dive bottom time for the planned depth of dive for each diver. Altitude adjustments to dive tables will be calculated for dives made at altitudes of 1000 ft (304.8 m) or more above sea level. **> See Appendix O**;

n. Name of each person directly involved in topside assistance/support to the dive team (i.e., crane operator, lock operator, etc.);

o. Means of direct communication between the dive site and the Contractor's project office, the contracting officer, and the lockmaster/USACE project manager;

NOTE: The dive plan will include the following statement: **"If for any reason the dive plan is altered in mission, depth, personnel, or equipment, the DDC will be contacted in order to review and accept the alteration prior to actual operation."**

30.A.18 AHA. An AHA represents the dive team's best effort to anticipate and mitigate or prevent the adverse effects of equipment failure, extreme weather/environmental conditions, or other hazardous/unexpected situations. Each AHA will be job specific and address each phase of work, to include the hazards associated with flying after diving. Lockout/tagout procedures and procedures for dealing with differential pressures will be included if appropriate. Some dives may be sufficiently complex to warrant several separate analyses. The AHA will be covered in detail at the pre-dive conference. If safe clearance procedures are required for the diving operation, the diving supervisor will walk through the clearances to assure they are in place and redundant where possible prior to the commencement of the diving operation. A copy of any clearances/permits to be issued to deal with identified hazards will be attached to the AHA.

30.A.19 Emergency management plan. An emergency management plan will be prepared for each dive. The minimum content of the plan will be as follows:

a. Location and phone number of nearest operational recompression chamber if not located at the dive site;

b. Location and phone number(s) of nearest hospital(s);

c. Location and phone number of nearest USCG Rescue Coordination Center, where appropriate;

d. Description of an emergency victim transport plan including phone numbers of appropriate emergency transport services;

e. Procedures and phone numbers or other means of communications to activate emergency services at the facility where the work is being performed;

f. Procedure to deal with entrapped or fouled diver including fouled umbilical (suction and entanglement/debris);

g. Actions upon loss of vital support equipment;

h. Actions upon loss of gas supply;

i. Action upon loss of communication;

j. Lost diver plan;

k. Injured diver plan;

l. Actions upon discovery of fire;

m. Diver blow up/over rapid ascent to surface;

n. Diver loss of consciousness; and

o. Injury/illness of member of surface crew with diver in the water.

30.A.20 Prior to each dive, and at the scene of the dive, a Pre-Dive Conference shall be held with all members of the dive team and a representative of the Contractor with sufficient authority to implement any requirements made by the USACE diving inspector or coordinator.

30.A.21 Prior to each dive, the entire dive team will be briefed in detail on the following (as a minimum):

a. Description of mission and location, including drawings and/or photographs pertinent to the mission and equipment and materials that are to be installed as part of the mission;

b. Description of diving apparatus/equipment and craft to be used;

c. Maximum working depth with estimated bottom times and water temperatures;

d. Names and duties of personnel on the team (when possible, incorporate at least one person on the dive that has previously performed the same or similar mission);

e. Discussion of AHA; and

f. Emergency procedures.

30.A.22 Upon completion of each diving operation or at the conclusion of each day, a dive team debriefing shall be conducted by the contractor dive supervisor. At the debriefing divers are advised of the location of the nearest recompression chamber (if not located on site) and cautioned on the limitations of their post dive activities including repetitive dives and flying.

30.A.23 If for any reason the dive mission is altered, the Contracting Officer shall be contacted by the dive inspector or the dive supervisor and a revised dive plan will be reviewed and accepted by the DDC prior to continuing the operation. This review may be conducted electronically and confirmed in writing after completion of the dive operation.

30.A.24 All diving activities shall be conducted with full knowledge and close coordination with the Contracting Officer and the local Government representative such as the lockmaster/project manager, etc. Divers shall not enter the water or move from prescribed location without the authorization of the contracting officer and the local Government representative.

30.A.25 For each diver and dive, the following dive log information, as a minimum, shall be recorded and maintained at the dive location:

a. Full name,

b. Date and location of dive,

c. Maximum depth and bottom time,

d. Surface interval between dives,

e. Breathing medium and type of equipment used,

f. Group classification at the beginning and end of each interval,

g. Water and ambient air temperature,

h. Depth(s) and duration(s) of any decompression stops, and

i. Date and time of last previous dive.

30.A.26 For each dive in which decompression sickness and/or pulmonary barotraumas is suspected or symptoms are evident, the following information shall be recorded and maintained:

a. Descriptions of signs and symptoms (including depth and time of onset);

b. Description and results of treatment; and

c. Name, address, and phone number of attending physician.

30.A.27 Prior to the dive, the contractor shall assure, as a minimum, the following pre-dive checks are performed:

a. Breathing air tanks contain significant air supply to perform the required work (i.e., standby air tanks are on site and full to the capacity). A pressure reading shall be taken to ensure that no less than 90% of tank capacity of breathing air is contained;

b. All diving equipment shall be checked for proper function prior to diver entry;

c. All necessary safety equipment specified herein is on site and functioning properly;

d. Lockout/tagout procedures are followed;

e. When applicable, crane signals are reviewed and radio communication with the crane operator is functioning properly;

f. When applicable, welding or cutting procedures are clearly reviewed, the proper welder polarity is set, and precautions have been taken to ensure that electrocution will not occur;

g. When applicable, blasting procedures are clearly reviewed and precautions have been taken to ensure unplanned/ unscheduled blasts will not occur; and

h. A pre-dive briefing shall be given that includes, but is not limited to, the accident management plan, AHA, equipment checklist, diving logs, diving conditions, and diving procedures.

30.A.28 Copies of the dive logs shall be submitted to the DDC after completion of the dive operation.

30.B SCUBA DIVING OPERATIONS

30.B.01 SCUBA diving operations shall not be conducted:

a. At depths greater than 100 ft (30.4 m);

b. On dives outside the no-decompression limits unless a dual lock, multi-place, recompression chamber (capable of recompressing diver at the surface to a depth equivalent to 165 ft (50.3 m) of sea water) is available at the dive location and is immediately available for use, a diving physician or trained chamber operator in communication with a diving physician is present, and the chamber is of sufficient size to accommodate the patient as well as the chamber tender;

c. Against currents exceeding one knot;

d. In enclosed or physically confining spaces,

e. Using closed circuit or semi-closed circuit SCUBA; or

f. In visibility less than 3 ft (0.9 m) unless line tended with diver/surface two-way voice communications.

30.B.02 Contractor SCUBA teams shall be manned in accordance with the criteria established in Appendix O. A standby diver will be dressed out and readily available when a diver is in the water (the

standby diver may remove his or her head gear after it is tested for proper operation)

30.B.03 Specific operational requirements for SCUBA operations are as follows:

a. Each SCUBA diver shall be equipped with a bailout bottle with a minimum of 30 ft^3 (0.85 m^3) of air and separate regulator. An octopus is not considered to be an alternate air source.

b. Each diver shall be equipped with a buoyancy compensation device (BCD) capable of maintaining the diver at the surface in a face-up position.

c. Each SCUBA diver shall be equipped with a submersible cylinder pressure gauge capable of being monitored by the diver during the dive.

d. Each SCUBA diver shall be equipped with a weight belt or assembly capable of quick release.

e. Each SCUBA diver shall be equipped with a depth gauge and knife.

f. SCUBA air cylinders shall comply with the following requirements:

(1) Air cylinders of seamless steel or aluminum that meet DOT 3AA and DOT 3AL specifications are approved for used on USACE projects;

(2) Each cylinder used on USACE projects must have identification symbols stamped into the shoulder of the tank; and

(3) SCUBA tanks used on USACE projects must be visually inspected internally at least annually and hydrostatically tested at least once every 5 years in accordance with DOT and the CGA regulations; test dates will be stamped into the shoulder of each tank.

g. A timekeeping device shall be used for recording diving times for all SCUBA diving operations. When two-way voice communications are not used, each dive supervisor and diver shall have a timekeeping device. When two-way voice communications are used, the dive supervisor, at a minimum shall have a timekeeping device.

h. Each tethered SCUBA diver shall wear a safety harness with a positive buckling device, attachment point for the safety line, and a lifting point to distribute the pull force of the line over the diver's body while maintaining the body in a heads-up vertical position when unconscious or inert.

30.C SURFACE-SUPPLIED AIR OPERATIONS

30.C.01 SSA operations shall not be conducted at depths greater than 190 ft (57.9 m), except that dives with bottom times of 30 minutes or less may be conducted to depth of 220 ft (67 m). Exceptional exposure dives, as defined by the US Navy Diving Manual, shall not be conducted except in emergency lifesaving situations.

30.C.02 SSA equipment components shall be a type specifically designed to be used in diving support systems.

30.C.03 Dual lock, multi-place, recompression chambers shall be available and ready for used at the dive location for any dive outside the no-decompression limits or deeper than 100 ft (30.4 m). A diving physician or a trained chamber operator in communication with a diving physician shall be in attendance with the chamber. A minimum of 4 hours of oxygen shall be available for chamber operations.

30.C.04 Dive jobs that require surface decompression as an integral part of the dive operation shall have a trained and qualified person, who is not acting as a working or standby diver or supervisor, operating the recompression chamber at all times. In dive operations where the chamber is required for emergency, first aid, or used for other unexpected recompression events, the diving supervisor may serve as the chamber operator so long as he is

specifically trained and qualified in hyperbaric chamber operations. If used for the latter purpose, all diving shall be suspended during the chamber operations. Divers completing a recompression dive will remain within 30 minutes drive time from a fully operable and staffed recompression chamber for a minimum of 2 hours after completing the recompression dive.

30.C.05 A bell shall be used for dives with an in-water decompression time greater than 120 minutes, unless heavy gear is worn or diving is conducted in physically confining spaces.

30.C.06 Minimum specific operational requirements for SSA diving operations are as follows:

a. Each diver shall be continuously tendered while in the water, with one diver per tender, regardless of depth;

b. An underwater tender/diver shall be stationed at the underwater point of entry when diving is conducted in enclosed or physically confining spaces;

c. Each diving operation shall have a primary breathing air supply sufficient to support divers for the duration of the planned dive, including decompression;

d. A SSA standby diver will be dressed out and readily available when a diver is in the water (the standby diver may remove his or her head gear after it is tested for proper operation);

e. Each diver must have a reserve breathing supply available that can be turned on immediately by the diver in the event of loss of air. The reserve breathing air supply shall be of sufficient capacity to safely terminate the dive in the event of loss of primary air but no less than 30 ft^3 (0.85 m^3).

f. Each dive location shall have a reserve breathing air supply integral or in-line with the primary air source sufficient to safely terminate the dive and recover the diver(s) in the event of loss of the primary air supply.

g. For dives deeper than 100 ft (30.4 m) or outside the no-decompression limits and using heavy gear, an extra air hose supplying breathing air to the diver shall be available to the standby diver. An in-water support stage shall be provided to divers in water when using heavy gear, regardless of depth; and

h. Electronic communication systems with an external speaker shall be incorporated in all SSA diving operations so the entire dive team can monitor communications. All dives shall be terminated if voice communications are lost.

30.D MIXED-GAS DIVING OPERATIONS

30.D.01 Mixed-gas diving shall be conducted only when a recompression chamber is ready for use at the dive location and either:

a. A bell is used at depths greater than 220 ft (67 m) or when the dive involves in-water decompression time of greater than 120 minutes (except when heavy gear is worn or when diving in physically confining spaces), or

b. A closed bell is used at depths greater than 300 ft (91.4 m), except when diving is conducted in physically confining spaces.

30.D.02 A separate dive team member shall tend each diver in the water.

30.D.03 A standby diver shall be dressed out and readily available while a diver is in the water. (The standby diver may remove his or her headgear after it is tested for proper operation.)

30.D.04 Each diving operation shall have a primary breathing gas supply sufficient to support divers for the duration of the planned dive, including decompression.

30.D.05 Each diving operation shall have a reserve breathing gas supply integral or in-line with the primary air source sufficient to safely recover the diver(s) in the event of failure of the primary breathing gas supply.

30.D.06 When heavy gear is worn:

a. An extra breathing gas hose capable of supplying breathing gas to the diver in the water shall be available to the standby diver, and

b. An in-water stage shall be provided to divers in the water.

30.D.07 An in-water stage shall be provided for divers without access to a bell for dives deeper than 100 ft (30.4 m) or outside the no-decompression limits.

30.D.08 When a closed bell is used, one dive team member in the bell shall be available and tend the diver in the water.

30.E EQUIPMENT REQUIREMENTS

30.E.01 Equipment modifications, repairs, tests, calibrations, or maintenance shall be recorded by means of a tagging or logging system, and include the date and nature of work performed and the name of the individual performing the work.

30.E.02 Air compressor systems used to supply air to SSA divers shall be equipped with a volume tank with a check valve on the inlet side, a pressure gauge, a relief valve, and a drain valve.

30.E.03 Compressors shall be of sufficient capacity to overcome any line loss or other losses and deliver a minimum 4.5 cfm (2.1 L/s) (actual) to each diver at the maximum diving depth.

30.E.04 Air compressor intakes shall be located away from areas containing exhaust or other contaminants. Compressors shall be designed specifically for their intended use and shall be equipped with an approved regulator, suitable in-line air purifying sorbent beds and filters inserted into the supply line to assure breathing air quality. Oil lubricated compressors shall be equipped with high-temperature, equipment failure, and carbon monoxide continuous monitoring alarm systems. All alarm systems shall be so designed that the dive supervisor will be made aware of the hazardous conditions. All systems will be calibrated daily or before use if not used daily. A record of the results of the testing shall be

maintained. (Alarms shall be of a type specifically designed for use in line with oil-lubricated compressors.)

30.E.05 Air compressor systems, both high pressure (SCUBA) and low pressure (surface supplied) will be tested by an accredited testing laboratory for air purity on a six-month basis by means of sampling at the connection to the distribution system. Purchased air will also be tested and certified.

a. A copy of the certificate of analysis showing the breathing air meets the minimum acceptable criteria shall be provided to the designated authority.

b. Air purity standards are as follows:

(1) Air shall not contain a level of carbon monoxide greater than 20 ppm:

(2) Air shall not contain a level of carbon dioxide greater than 1,000 ppm;

(3) Air shall not contain a level of oil mist greater than 5 milligrams per cubic meter (mg/m^3);

(4) Air shall not contain a level of hydrocarbons other than methane greater than 25 ppm; and

(5) Air shall not contain a noxious or pronounced odor.

30.E.06 Breathing supply hoses.

a. Breathing air supply hoses shall meet the specifications listed in SAE 100-R-3, have a working pressure of the total breathing gas system, and have a rated bursting pressure at least four times the working pressure.

b. Breathing air supply hoses shall have connectors made of corrosion resistant materials and have a working pressure at least equal to the working pressure of the hose to which they are attached: connectors must not be able to become accidentally disengaged.

c. Umbilicals shall be marked in 10 ft (3 m) increments to 100 ft (30.5 m) (beginning at the divers end) and in 50 ft (15.2 m) increments thereafter.

d. Umbilicals shall have a nominal breaking strength of 2650 lb (1202 kg) and shall be made of kink resistant materials.

e. A safety line of at least 3/8 in (0.9 cm) synthetic material shall be included as an integral part of each umbilical.

f. Hoses must be tested at least annually to 1.5 times the working pressure.

g. When hoses are not in use, their open ends must be closed by taping or other means.

30.E.07 SSA and mixed-gas helmets and masks shall have a non-return valve at the attachment between the helmet or mask and hose which will close readily and also have an exhaust valve; helmets and masks shall have a minimum ventilation rate capacity of 4.5 cfm (2.1 L/s) (actual) at the depth at which they are operated. The use of Jack Brown masks is prohibited unless it incorporates electronic communication and a means of incorporating a diver carried bailout system.

30.E.08 SSA and mixed-gas helmets and masks must be capable of supporting a reserve breathing supply which can be immediately turned on by the diver in event of loss of air.

30.E.09 SSA and mixed-gas helmets and masks must be capable of supporting a two-way, diver-surface communication system.

30.E.10 Weights and harnesses. Unless heavy gear is worn, each diver shall wear a safety harness with a positive buckling device, attachment point for the safety line, and a lifting point to distribute the pull force of the line over the diver's body while maintaining the body in a heads-up vertical position when unconscious or inert.

30.E.11 The following emergency and first-aid equipment shall be located at all dive sites:

a. A first-aid kit meeting the requirements of Section 3;

b. An oxygen resuscitation system capable of delivering oxygen for a minimum of 30 minutes; and

c. A stokes litter or backboard, with attached floatation device.

30.E.12 International alpha code and recreational dive flags with a minimum dimension of 23 in (58.4 cm) will be displayed a minimum of 3 ft (0.9 m) above the working surface at the dive location during diving operations.

30.E.13 Hand-held power tools shall be tested and certified to be safe for underwater use; these tools shall be de-energized before being placed into or retrieved from the water and shall not be supplied with power until requested by the diver.

30.F ADVANCED DIVING TECHNOLOGY

30.F.01 The use of one-atmosphere suits (e.g., Newt Suits) requires the specific approval of the USACE Command Diving Coordinator (UDC) prior to the use of such equipment.

30.F.02 The use of "Oxygen Enriched Air" (OEA) such as Nitrox (EANx) breathing mixtures by Contractors requires the prior approval by the DDC/UDC. Decompression tables designed specifically for the OEA mixture being used shall be followed without exception. A dual lock, multi-place, recompression chamber shall be available and ready for use at the dive location. A diving physician, or a trained chamber operator in communication with a diving physician shall be in attendance with the chamber.

30.F.03 Contractors must provide evidence of training and experience with OEA breathing mixtures prior to actual diving operations.

30.F.04 OEA breathing mixture shall be analyzed/tested by the diver to assure proper mix prior to each use.

30.G SCIENTIFIC SNORKELING

30.G.01 Scientific snorkeling will be conducted only with prior acceptance of the Safety and Occupational Health Office Diving Safety Representative and the DDC.

30.G.02 Scientific snorkeling will be allowed only for environmental assessments such as fish surveys, stream surveys, and the like. It will not be used for structural inspections.

30.G.03 A snorkeling team shall be made up of no less than three persons: snorkeler, observer/assistant, and supervisor.

30.G.04 Quality assurance for snorkeling operations will be provided by USACE personnel trained or otherwise qualified as diving inspectors.

30.G.05 Scientific snorkeling will NOT be allowed in waters deeper than 5 ft (1.5 m).

30.G.06 All snorkelers and observers/assistants will be certified as open water divers by a nationally-recognized organization (e.g., Professional Association of Diving Instructors (PADI), National Association of Underwater Instructors (NAUI), etc.).

30.G.07 An observer/assistant will accompany each snorkeler either along the shore or in a boat and be within 50 ft (15.2 m) of the snorkeler at all times. The observer/assistant will be wearing a PFD, equipped with a throw bag and/or ring buoy with at least 70 ft (21.3) of line, and capable of performing a rescue in an emergency.

30.G.08 Tethers will not be used in streams due to entanglement hazards.

30.G.09 Areas of extreme water velocity and turbulence will be avoided especially those immediately upstream from debris jams or bedrock outcrops

30.G.10 Snorkeling will not be done in water where a snorkeler cannot wade across the stream/body of water. Snorkelers will be provided with appropriate thermal protection.

30.G.11 Employees will be determined medically fit prior to snorkeling. The Contractor shall submit certification, signed by a licensed physician, stating that each snorkeler is physically and medically fit to perform snorkeling activities.

30.G.12 The snorkeler, observer/assistant, and supervisor shall be certified in CPR and first aid.

30.G.13 A first-aid kit, including CPR mask and stokes litter or backboard with attached flotation will be available where snorkeling is being performed.

30.G.14 A means of communication capable of contacting emergency services must be available at locations where snorkeling is performed.

30.G.15 Each snorkeler will be equipped with a professional grade diving mask, snorkel, and dive knife.

30.G.16 A snorkeling protocol will be developed and included in the project file. It will contain as a minimum, the following:

a. An AHA for each specific snorkeling mission. Particular detail will be given to currents and other environmental considerations.

b. Records for snorkeling activities will be maintained. These records will include as a minimum: annual physician letter stating fitness to perform snorkeling survey, an AHA, and a snorkeling plan. The latter will be based on the requirements of 30.A16.

30.G.17 Snorkelers will wear snorkeling vests for buoyancy with an integrated emergency inflation device and wear apparel which provides appropriate environmental protection. The apparel must include fins or other appropriate foot protection.

SECTION 31

TREE MAINTENANCE AND REMOVAL

31.A GENERAL

31.A.01 Each location where tree maintenance or removal is done shall be under the direction of a qualified tree worker.

31.A.02 Working near electrical equipment and systems. ***> Also see Section 11.***

a. Employees working in the proximity of electrical equipment or conductors shall consider all such equipment or conductors energized with potentially fatal voltage, never to be touched (directly or indirectly).

b. An inspection shall be made by a qualified tree worker to determine whether an electrical hazard exists before climbing, otherwise entering, or performing any work in or on a tree.

c. Only a qualified line-clearance tree trimmer or qualified line-clearance tree trimmer trainee (under the direct supervision of qualified personnel) shall be assigned to the work if it is found that an electrical hazard exists.

d. There shall be a second qualified line-clearance tree trimmer or line-clearance tree trimmer trainee within normal voice communication during the clearing operations aloft under the following conditions:

(1) When the line-clearance tree trimmer or line-clearance tree trimmer trainee must approach any closer than 10 ft (3 m) to any conductor or electrical apparatus energized in excess of 750 volts;

(2) When branches or limbs being removed cannot first be cut (with a pole pruner/pole saw) sufficiently clear of the equipment or conductors so as to avoid contact; or

(3) When roping is required to remove branches or limbs from such equipment or conductors.

e. Line-clearance tree trimmers and line-clearance tree trimmer trainees shall maintain the distances from energized conductors as specified in Table 11-1. All other tree workers shall maintain a minimum distance of 10 ft (3 m) from energized conductors rated 50 kV phase-to-phase or less. For conductors rated over 50 kV phase-to-phase, the minimum distance shall be 10 ft + 4/10 in (3 m +/- 1 cm) for each kV over 50 kV.

31.A.03 During all tree working operations above a height of 12 ft (3.6 m) that are not subject to the requirements of 31.A.02d, there shall be a second worker in the vicinity.

31.A.04 Equipment.

a. Equipment shall be inspected, maintained, repaired, and used in accordance with the manufacturer's instructions.

b. Employees shall be instructed in the safe and proper use of all equipment provided to them.

31.A.05 Climbing ropes shall not be used to lower limbs or other parts of trees or to raise or lower equipment.

31.A.06 A handle shall be used for raising and lowering tools.

31.A.07 Tools used for cabling, bark tracing, cavity work, etc., shall be carried in a bag or belt designed to hold tools and not put in the pockets or stuck in the top of a boot.

31.A.08 When placing an employee in a tree with an aerial device, prior to leaving the basket for entry onto the tree, and before

removing the safety line attached to the basket, the employee shall be safely secured to the tree. The procedure shall be reversed when entering the basket from the tree.

31.A.09 See Appendix P for recommended safe tree maintenance and removal practices.

31.B TREE CLIMBING

31.B.01 Equipment.

a. Climber spurs shall be of the tree-climbing type and shall have gaffs of the type and length suitable for the tree being climbed.

b. Climbing ropes shall have a minimum diameter of 1/2 in (1.2 cm) and be constructed of a synthetic fiber, with a minimum nominal breaking strength of 5400 lb (2439.4 kg) when new. Maximum working elongation (elasticity) shall not exceed 7% at a load of 540 lb (244.9 kg) (10% maximum breaking strength).

c. Polypropylene or other synthetic ropes having similar low melting points shall not be used as climbing ropes.

31.B.02 A tree worker shall be tied in with an approved type of climbing rope and safety saddle when working above the ground: this does not necessarily apply to a worker ascending into a tree; work may be performed while standing on a self-supporting ladder but only when the worker is tied in as required.

31.B.03 During climbing operations, tree limbs should be inspected before weight is applied to them.

31.B.04 A 5/8 in (1.5 cm) metal shackle shall be secured to the end of a support line that meets minimum standards for a climbing line. The support line shall be tied to the pin of the shackle with the climbing line placed through the shackle. The support line shall be tied off at the base of the tree or any other acceptable anchor.

31.B.05 The climbing line shall be crotched as soon as practicable after the employee is aloft, and a taut-line hitch tied and checked.

31.B.06 The worker shall be completely secured with the climbing line before starting the operation. The worker shall remain tied in until the work is completed and he/she has returned to the ground. If it is necessary to recrotch the rope in the tree, the worker shall re-tie in or use the safety strap before releasing the previous tie.

31.B.07 Tree workers shall not carry tools in their hands while climbing. Tools shall be raised and lowered one at a time by means of a line, except when working from an aerial-lift device or during topping or removing operations.

31.C FELLING

31.C.01 Prior to felling operations, the employee shall consider:

a. The tree and the surrounding area for anything that may cause trouble when the tree falls;

b. The shape of the tree, the lean of the tree, and decayed or weak spots;

c. Wind force and direction;

d. The location of other people; and

e. Electrical hazards.

31.C.02 Prior to felling operations, the work area shall be cleared to permit safe working conditions and an escape route shall be planned.

31.C.03 Each worker shall be instructed as to exactly what he/she is to do. All workers not directly involved in the operation shall be kept clear of the work area.

31.C.04 Before starting to cut, the operator shall be sure of his/her footing and must clear away brush, fallen trees, and other materials that might interfere with cutting operations.

31.C.05 A notch and backcut shall be used in felling trees over 5 in (12.7 cm) in diameter (measured at breast height). No tree shall be felled by "slicing" or "ripping" cuts.

a. The depth or penetration of the notch shall be about one-third the diameter of the tree.

b. The opening or height of the notch shall be about 2.5 in (6.3 cm) for each 1 ft (0.3 m) of the tree's diameter.

c. The backcut shall be made higher (approximately 2 in (5 cm)) than the base of the notch to prevent kickback.

31.C.06 The employee shall work from the uphill side whenever possible.

31.C.07 Just before the tree or limb is ready to fall, an audible warning shall be given to all those in the area. All persons shall be safely out of range when the tree falls.

31.C.08 If there is danger that the trees being felled may fall in the wrong direction or damage property, wedges, block and tackle, rope, or wire cable (except when an electrical hazard exists) shall be used. All limbs shall be removed from trees to a height and width sufficient to allow the tree to fall clear of any wires and other objects in the vicinity.

31.C.09 Special precautions shall be taken when roping rotten or split trees due to the potential for falling in an unexpected direction even though the cut is made on the proper side.

31.C.10 Persons shall be kept back from the butt of a tree that is starting to fall.

31.D BRUSH REMOVAL AND CHIPPING

31.D.01 Brush and logs shall not be allowed to create a hazard at the work site.

31.D.02 Employees working with a brush chipper shall be trained in its safe operation. The chipper shall be operated in accordance with the manufacturer's recommendations.

31.D.03 Brush chippers.

a. Rotary drum and disk-type tree or brush chippers not equipped with a mechanical in-feed system shall be equipped with an in-feed hopper not less than 85 in (215.9 cm) (the sum of the horizontal distance from the chipper blade out along the center of the chute to the end of the chute and the vertical distance from the chute down to the ground) and shall have sufficient height on its side members to prevent personnel from contacting the blades or knives of the machine during normal operations.

b. Rotary drum and disk-type tree or brush chippers not equipped with a mechanical in-feed system shall have a flexible anti-kickback device installed in the in-feed hopper for the purpose of protecting the operator and other persons in the machine area from the hazards of flying chips and debris.

c. Disk-type tree or brush chippers equipped with a mechanical in-feed system shall have a quick stop and reversing device on the in-feed. The activating mechanism for the quick stop and reversing device shall be located across from the top, along each side of, and as close as possible to the feed end of the in-feed hopper and within easy reach of the operator.

d. The feed chute or feed table of a chipper shall have sufficient height on its side members to prevent operator contact with the blades or knives during normal operation.

e. A swinging baffle shall be mounted in front of the knives to prevent throwback of material.

f. Brush chippers shall be equipped with an exhaust chute of sufficient length or design to prevent contact with the blade.

g. Brush chippers shall be equipped with a locking device on the ignition system to prevent unauthorized starting of the equipment.

h. Brush chipper cutting bars and blades shall be kept sharp, properly adjusted, and otherwise maintained in accordance with the manufacturer's recommendations.

31.D.04 Trailer brush chippers detached from trucks shall be chocked or otherwise secured.

31.D.05 All workers feeding brush into chippers shall wear eye protectors. Loose clothing, gauntlet-type gloves, rings, and watches shall not be worn by workers feeding the chipper.

31.D.06 Employees shall never place hands, arms, feet, legs, or any other part of the body on the feed table when the chipper is in operation or the rotor is turning. Push sticks (of material that can be consumed by brush chipper) shall be used.

31.D.07 Brush chippers shall be fed from the side of the centerline, and the operator shall immediately turn away from the feed table when the brush is taken into the rotor. Chippers shall be fed from the curbside whenever possible.

31.D.08 Material such as stones, nails, sweepings, etc. shall not be fed into brush chippers.

31.D.09 The brush chipper chute shall not be raised while the rotor is turning.

31.E OTHER OPERATIONS AND EQUIPMENT

31.E.01 Pruning and trimming.

a. Pole pruners, pole saws, and similar tools shall be equipped with wood or nonmetallic poles. Actuating cords shall be of a nonconducting material.

b. Pole pruners and pole saws shall be hung securely in a vertical position with the sharp edges away from employees. They shall not be hung on utility wires or cables or left overnight in trees.

c. When necessary, warning shall be given by the worker in the tree before a limb is dropped.

31.E.02 Limbing and bucking.

a. Whenever it is possible to do so, the tree worker shall work on the side on which the limb is being cut.

b. Branches bent under tension shall be considered hazardous.

c. When topping or lowering limbs, consideration shall be given to the use of taglines to control the limbs. A separate line shall be attached to limbs that cannot be dropped or are too heavy to be controlled by hand. The use of the same crotch for both safety rope and work rope shall be avoided.

d. In bucking, tree workers shall stand on the uphill side of the work whenever possible. The tree worker shall block the log to prevent rolling when necessary.

e. When bucking, wedges shall be used as necessary to prevent binding of the guide bar or chain.

31.E.03 Stump cutters shall be equipped with enclosures or guards that effectively protect the operator.

31.E.04 Trucks.

a. A steel bulkhead or equivalent protection shall be provided to protect the occupants of vehicles from load shifts.

b. Logs or brush shall be securely loaded onto trucks in such a manner as not to obscure taillights or brake lights and vision, or to overhang the side.

c. In order to avoid the hazard of spontaneous combustion or the production of undesirable products, wood chips shall not be left in trucks for extended periods.

31.E.05 Power saws.

a. Power saws weighing more than 15 lb (6.8 kg) that are used in trees shall be supported by a separate line, except when used from an aerial lift device.

b. Where there are no lateral branches on which to crotch a separate support line for power saws weighing more than 15 lb (6.8 kg), a false crotch shall be used.

c. The engine shall be started and operated only when all co-workers are clear of the saw.

d. The operator will shut off the saw when carrying it over slippery surfaces, through heavy brush, and when adjacent to personnel. The saw may be carried running (idle speed) for a short distances (less than 50 ft (15.2 m)) as long as it is carried to prevent contact with the chain or muffler.

31.E.06 Chopping tools.

a. Chopping tools that have loose or cracked heads or splintered handles shall not be used.

b. Chopping tools shall never be used while working aloft.

c. Chopping tools shall be swung away from the feet, legs, and body, using the minimum power practical for control.

d. Chopping tools shall not be driven as wedges or used to drive metal wedges.

31.E.07 Cant hooks, cant dogs, tongs, and carrying bars.

a. Hooks shall be firmly set before applying pressure.

b. Workers shall be warned and shall be in the clear before logs are moved.

c. The points of hooks shall be at least 2 in (5 cm) long and shall be kept sharp.

d. Workers shall stand to the rear and uphill when rolling logs.

31.E.08 Wedges and chisels.

a. Wedges and chisels shall be properly pointed and tempered.

b. Only wood, plastic, or soft metal wedges shall be used with power saws.

c. Wood-handled chisels should be protected with a ferrule on the striking end.

SECTION 32

AIRFIELD OPERATIONS

32.A GENERAL

32.A.01 The following safety requirements shall be in addition to the airfield's safety requirements. When an airfield has safety requirements that differ from those of this Section, the more stringent requirements shall prevail.

32.A.02 Prior to the performance of any work upon or around an airfield, the GDA shall be informed and provided a written description of work activities, work locations, work equipment and personnel requirements, and work schedules.

a. The GDA shall also be informed, in writing, of any changes to this information.

b. The GDA shall keep the airport operator informed so that Notice to Airmen can be issued to reflect hazardous conditions.

32.A.03 Unless a runway is closed by the airfield operator and properly marked, it shall not be used for purposes other than aircraft operation without permission of the GDA.

32.A.04 All paved surfaces, such as runways, taxiways, and hardstands, shall be kept clean at all times, particularly with regards to stones and other small objects that might damage aircraft propellers or jet aircraft.

32.A.05 When mobile equipment is not performing work on an airfield it, shall be removed to a location(s) that is approved by the GDA and at a distance of at least 750 ft (228.6 m) (plus any additional distance necessary to ensure the safety of airfield operations) from the runway centerline

32.A.06 Excavations.

a. An excavation shall not be opened unless there is material on hand and ready for placing in it.

b. As soon as practicable after material has been placed and work approved, the excavation shall be backfilled and compacted. Meanwhile, all hazardous conditions shall be identified as specified in this section.

32.A.07 Nothing shall be placed upon the landing areas without authorization of the GDA.

32.A.08 Effective control of vehicles required to enter or cross aircraft movement areas shall be maintained.

32.A.09 Those landing areas hazardous to aircraft shall be outlined (unless otherwise directed by the GDA).

a. During daylight, areas shall be outlined with red flags spaced every 200 ft (60.9 m).

b. During periods of darkness, areas shall be outlined with battery-operated low-intensity red flashing lights spaced every 200 ft (60.9 m).

c. During dawn and dusk, and when weather conditions reduce visibility, areas shall be outlined with both red flags and battery-operated low-intensity red flashing lights spaced every 200 ft (60.9 m).

32.A.10 When work is to be performed at an airfield where flying is controlled, permission to enter a landing area shall be obtained from the control tower operator every time entry is required, unless the landing area has been closed by the airfield operator and marked as hazardous in accordance with 32.A.09a-c.

a. All vehicles which operate in landing areas shall be identified by means of a checkered flag on a staff attached to, and flying above, the vehicle: the flag shall be 3 ft (0.9 m) square and consist of a checkered pattern of international orange and white squares of 1 ft (0.3 m) on each side.

b. All other equipment and materials in the landing area shall be marked as specified in 32.A.09a-c.

32.A.11 When working in landing areas, work shall be performed so as to leave that portion of the landing area that is available to aircraft free from hazards, including holes, piles, or material, and projecting shoulders that might damage an airplane tire.

32.A.12 Nothing shall be placed upon a safety precaution area without permission of the GDA.

32.A.13 All equipment and materials in a safety precaution area shall be marked as specified in 32.A.09a-c: if an object in a safety precaution area projects above the approach-departure clearance surface or above the transitional surface, the object shall be marked with a red light.

APPENDIX A

MINIMUM BASIC OUTLINE FOR ACCIDENT PREVENTION PLAN

An APP is, in essence, a safety and health policy and program document. The following areas are typically addressed in an APP, but a plan shall be job-specific and shall also address any unusual or unique aspects of the project or activity for which it is written. The APP shall interface with the employer's overall safety and health program. Any portions of the overall safety and health program that are referenced in the APP shall be included as appropriate. **> See 01.A.11**

1. SIGNATURE SHEET. Title, signature, and phone number of the following:

a. Plan preparer (qualified person such as corporate safety staff person, QC).

b. Plan must be approved, by company/corporate officers authorized to obligate the company (e.g., owner, company president, regional vice president, etc.).

c. Plan concurrence (e.g., Chief of Operations, Corporate Chief of Safety, Corporate Industrial Hygienist, project manager or superintendent, project safety professional, project QC) (provide concurrence of other applicable corporate and project personnel (Contractor)).

2. BACKGROUND INFORMATION. List the following:

a. Contractor;

b. Contract number;

c. Project name;

d. Brief project description, description of work to be performed, and location (map);

e. Contractor accident experience (provide information such as experience modification rate (EMR), OSHA 300 Forms, corporate safety trend analyses); and

f. Listing of phases of work and hazardous activities requiring AHA.

3. STATEMENT OF SAFETY AND HEALTH POLICY. Provide a copy of your current corporate/company Safety and Health Policy Statement. NOTE: In addition to the corporate/company policy statement, your corporate/company safety program may provide a significant portion of the information required by the APP.

4. RESPONSIBILITIES AND LINES OF AUTHORITIES.

a. Identification and accountability of personnel responsible for safety - at both corporate and project level. (Contracts specifically requiring safety or industrial hygiene personnel should include a copy of their resume. The District Safety and Occupational Health Office will review the qualifications for acceptance.)

b. Lines of authority.

5. SUBCONTRACTORS AND SUPPLIERS. Provide the following:

a. Identification of subcontractors and suppliers (if known);

b. Means for controlling and coordinating subcontractors and suppliers; and

c. Safety responsibilities of subcontractors and suppliers.

6. TRAINING.

a. List subjects to be discussed with employees in safety indoctrination.

b. List mandatory training and certifications that are applicable to this project (e.g., explosive actuated tools, confined space entry, crane operator, diver, vehicle operator, HAZWOPER training and certification, PPE) and any requirements for periodic retraining/recertification.

c. Identify requirements for emergency response training. **> See paragraph 12.b. below for a list of requirements that may require emergency response training.**

d. Outline requirements (who attends, when given, who will conduct, etc.) for supervisory and employee safety meetings.

7. SAFETY AND HEALTH INSPECTIONS. Provide details on:

a. Who will conduct safety inspections (e.g., PM, safety professional, QC, supervisors, employees), proof of inspector's training/qualifications, when inspections will be conducted, how the inspections will be recorded, deficiency tracking system, follow-up procedures, etc. The names of competent and/or qualified person(s) and proof of competency/ qualification to meet specific OSHA competent/qualified person(s) requirements must be attached.

b. Any external inspections/certifications that may be required (e.g., USCG).

8. SAFETY AND HEALTH EXPECTATIONS, INCENTIVE PROGRAMS, AND COMPLIANCE.

a. The company's written safety program goals, objectives, and accident experience goals for this contract should be provided.

b. A brief description of the company's safety incentive programs (if any) should be provided.

c. Policies and procedures regarding noncompliance with safety requirements (to include disciplinary actions for violation of safety requirements) should be identified.

d. Provide written company procedures for holding managers and supervisors accountable for safety.

9. ACCIDENT REPORTING. The Contractor shall identify who, how, and when the following will be completed:

a. Exposure data (man-hours worked);

b. Accident investigations, reports, and logs;

c. Immediate notification of major accidents.

10. MEDICAL SUPPORT. Outline on-site medical support and off-site medical arrangements including rescue and medical duties for those employees who are to perform them, and the name(s) of on-site Contractor personnel trained in first aid and CPR.

11. PERSONAL PROTECTIVE EQUIPMENT. Outline procedures (who, when, how) for conducting hazard assessments and written certifications for use of PPE. Outline procedures to be followed to assure the proper use, selection, and maintenance of personal protective and life saving equipment (e.g., protective footwear, protective gloves, hard hats, safety glasses, hearing protection, body harnesses, lanyards).

12. PLANS (PROGRAMS, PROCEDURES) REQUIRED BY THE SAFETY MANUAL (as applicable).

a. Layout plans (04.A.01)

b. Emergency response plans:

(1) Procedures and tests (01.E.01)

(2) Spill plans (01.E.01, 06.A.02)

(3) Firefighting plan (01.E.01, 19.A.04)

(4) Posting of emergency telephone numbers (01.E.05)

(5) Wild land fire prevention plan (09.K.01)

(6) Man overboard/abandon ship (19.A.04)

c. Hazard communication program (01.B.06). Provide the location of MSDS, records of Contractor employee training, and inventory of hazardous materials (including approximate quantities and a site map) that will be brought onto Government project by the Contractor and subcontractor.

d. Respiratory protection plan (05.E.03)

e. Health hazard control program (06.A.02)

f. Lead abatement plan (06.B.05 & specifications)

g. Asbestos abatement plan (06.B.05 & specifications)

h. Abrasive blasting (06.H.01)

I. Confined space (06.I)

j. Hazardous energy control plan (12.A.07)

k. Critical lift procedures (16.C.18)

l. Contingency plan for severe weather (19.A.03)

m. Access and haul road plan (8.D.1)

n. Demolition plan (engineering and asbestos surveys) (23.A.01)

o. Emergency rescue (tunneling) (26.A.05)

p. Underground construction fire prevention and protection plan (26.D.01)

q. Compressed air plan (26.I.01)

r. Formwork and shoring erection and removal plans (27.B.02)

s. Jacking plan (lift) slab plans (27.D.01)

t. Safety and health plan and SSHP (for HTRW work, an SSHP must be submitted and shall contain all information required by the APP - two documents are not required (28.A.02)

u. Blasting plan (29.A.01)

v. Diving plan (30.A.13)

w. Plan for prevention of alcohol and drug abuse (Defense Federal Acquisition Regulation Supplement (DFARS) Subpart 252.223-7004)

x. Fall protection plan (Section 21)

y. Steel erection plan (27.E.01)

z. Night operations lighting plan (16.C.19.d)

aa. Site sanitation plan (Section 02)

bb. Fire Prevention Plan (09.A.01)

13. CONTRACTOR INFORMATION. The Contractor shall provide information on how they will meet the requirements of applicable Sections of this manual in the APP. As a minimum, excavations, scaffolding, medical and first-aid requirements, sanitation, PPE, fire prevention, machinery and mechanized equipment, electrical

safety, public safety requirements; and chemical, physical agent, and biological occupational exposure prevention requirements shall be addressed as applicable.

14. SITE-SPECIFIC HAZARDS AND CONTROLS. Detailed site-specific hazards and controls shall be provided in the AHA for each activity of the operation.

APPENDIX B

EMERGENCY RECOVERY OPERATIONS

1. SAFETY AND HEALTH REQUIREMENTS.

a. During emergency operations and recovery assistance activities, it is extremely important that safety and health requirements are implemented. Personnel often perform unusual, difficult, hazardous tasks while in a challenging environment, and these conditions increase the risk of accident. Additionally, resources are in short supply, and the loss of any resource to an accident indicates poor management. The safety and occupational health of USACE employees, Contractors, and members of the public exposed to USACE activities will be a primary concern during all USACE emergency operations and recovery assistance. Safety and Occupational Health Offices shall provide the necessary input to their Emergency Management counterparts to ensure that planning for safety and health concerns (including risk and hazard analysis) is addressed prior to, during, and following disasters and disaster response.

b. Safety and occupational health program requirements shall be included in all Government and contract operations. FAR Clause 52.236-13 shall be included in contracts and memoranda of agreement/understanding (MOAs/MOUs) for emergency operations and recovery assistance.

2. INITIAL RESPONSE. A qualified safety and health professional shall be immediately alerted of the disaster and shall be included in the planning and execution of response and recovery efforts. This individual shall assess safety and health issues and shall assure precautions are taken prior to deployment of personnel. Issues to consider include: sanitation, drinking water, power supply, living quarters, driving conditions, environmental conditions, and health issues.

3. STAFFING. Safety and Occupational Health Offices in the Geographic District experiencing the disaster will be temporarily staffed with additional safety, industrial hygiene, and medical personnel as necessary to ensure a comprehensive safety and occupational health program is administered for all emergency operations and recovery assistance activities. This is usually accomplished by use of safety and occupational health functional planning and response team. The Geographic District shall establish an emergency operations safety office (minimum staffing to include a safety manager and administrative support person) dedicated totally to emergency operations. Each area office established for emergency operations shall have a minimum of one safety professional.

a. Medical personnel shall provide medical assistance, assessments, and advice to USACE management and employees.

b. Safety and health personnel shall: manage safety and health aspects of emergency operations and recovery assistance activities; provide advice on safety and health issues; provide safety and health technical oversight for USACE employees, and quality assurance for Contractor employees.

c. Prime Contractors for emergency recovery operations are required to have as a minimum a full-time, qualified safety professional on-site. Qualifications of the safety professional shall be provided to the GDA. Additional Contractor personnel may be required as determined by the GDA.

4. QUALIFICATIONS OF GOVERNMENT EMPLOYEES.

a. All Government employees reporting for emergency recovery operations shall be medically fit to perform assigned duties for extended hours and endure the additional stress related to this type of work. Prior to assignment to deployment teams and prior to voluntary deployment assignments, the GDA shall

ensure employees are medically screened and/or examined by a licensed physician.

(1) The medical screening and/or examination will provide the basis for a determination of fitness for deployment.

(2) Medical screening and/or examination procedures shall be developed by a licensed physician and shall be in accordance with 5 CFR 339.

(3) The medical screening and/or examination shall fully consider the employee's current medical status to include the use of prescription and non-prescription maintenance medications, use of medical appliances, deployment job duties and physical capacities required, use of PPE (such as respirators), extended work hours, potential adverse living and environmental factors, anticipated availability of medical resources at the deployment site in case of emergency, immunizations required, and other factors determined appropriate by the physician.

b. Medical documentation shall be on applicable medical screening and/or medical history and medical examination forms and shall be maintained in accordance with 5 CFR 293 and Privacy Act requirements.

c. Physicians shall provide the GDA with recommendations regarding employee deploy ability status to include the length of medical certification (1 year, 2 years, etc.).

d. Employees with know pre-existing non-work related medical conditions such as uncontrolled diabetes, heart or lung problems, back conditions, or hypertension should not deploy to emergency operations sites unless specific medical clearance is provided by their personal physician(s) indicating their current medical condition will not jeopardize their health or their ability to fully perform their duty assignments at deployment sites.

e. Employees may be returned to their duty station if during the course of duty they experience health problems that may endanger their well-being.

f. Employees shall be notified that pharmacies and medical services may be limited at the emergency operations site.

5. MOBILIZATION OF USACE PERSONNEL. Prior to departing their duty station for emergency operations and recovery assistance activities, USACE personnel will be provided:

a. PPE (e.g., head, eye, hearing, foot protection, and PFDs) appropriate for the hazards of the field activities that they will perform, and

b. Immunizations appropriate for their field exposure (follow-up immunizations will be the responsibility of each employee's home duty station).

6. SAFETY ORIENTATION. Safety and health in-briefings and orientation shall be conducted as personnel arrive at the emergency area and prior to beginning work activities.

7. COMMUNICATIONS.

a. Paging equipment, two-way radios, cellular phones, computers, and facsimile machines shall be used as needed to establish and enhance communications. ***> See 18.B.01.***

b. Safety and health programs, documents, signs, tags, instructions, etc., shall be communicated to employees and the public in a language that they understand.

8. DUTY SCHEDULE.

a. For operations lasting longer than 2 weeks, USACE employees should not work in excess of 84 hours per week. The duty hours an employee would be required to work during

emergency operations would normally be 12 hours per day, 7 days a week. Employees shall be provided the opportunity for 24 hours of rest after working 14 days and 48 hours of rest after working 21 days. Employees shall be required to take at least 24 hours off for rest after a continuous 29-day period of work and shall be required to take at least 24 hours every 2 weeks thereafter. Supervisors shall monitor employees for signs of stress-related health problems and seek medical assistance as appropriate.

b. While working extended hours, employee travel time to and from work shall be minimized to allow for sufficient rest. If travel time to and from work exceeds 90 minutes one way, work hours shall be shortened by the travel time in excess of the 180 minute round trip travel time. Group transportation may be used to minimize individual driving time.

9. MACHINERY AND MECHANIZED EQUIPMENT. >*See Sections 16-18*

a. Inspection of equipment is critical as mobilization can be extremely short and equipment may not be up to USACE safety standards. Whenever feasible, contract specifications shall provide adequate mobilization time to allow equipment to be inspected and brought up to USACE standards. Equipment not meeting the requirements of this manual will not be used.

b. Trucks hauling debris on public highways shall have physical barriers (tail gates or chain link fencing and covers) to preclude debris from falling from the truck. Reverse alarms shall be provided; the need for rollover warning devices shall be considered for long-bed end-dump trucks. Sideboards shall not be added to trucks to increase their capacity unless specific design specifications are provided to Contractors as part of the scope of work. Single or double boards added to trailers designed for normal operation with the additional boards are permitted.

c. Prior to operation, Contractors shall develop written safe operating procedures for each brush chipper, shredder, and/or grinder. SOPs shall incorporate the manufacturer's recommendations for safe operation of the chipper as well as the use of EZ and fire prevention efforts. Operations and maintenance manuals for chippers, grinders, and shredders shall be kept on-site. A minimum 200 ft (61.0 m) pedestrian EZ is required during operation of chippers, shredders, and grinders unless documentation or actual practice indicates otherwise. The public shall be kept a minimum of 300 ft (91.4 m) from all chipper operations. Signs shall be placed at 200 ft (61.0 m) indicating flying debris hazards and that pedestrians are prohibited.

(1) Unprotected personnel shall not enter the EZ while the chipper is in operation. Front-end loaders and knuckle booms working in debris reductions areas or feeding grinders, shredders, chippers, or burn pits shall have completely enclosed cabs. Protection shall include heavy metal grating of sufficient strength to protect the operators from logs, limbs, and woods or other debris thrown from grinders.

(2) Whenever chipper operations are shut down for any significant length of time (e.g., overnight or when the chipper will be left unattended), equipment walls, crevice drums, cutter heads and hammers, and drive mechanisms shall be cleared of all combustible materials by blowing, washing, and wetting down. Any material contaminated by leakage of hydraulic fluids, oils, or fuel shall be immediately removed. Leakage shall be minimized through preventive maintenance. Because piles of chipped wood are susceptible to spontaneous combustion, fire controls such as segregation, separation, and adequate water supply shall be used.

d. The number of workers in proximity to loaders, trucks, and other equipment shall be the minimum necessary to accomplish the job. In restricted areas or areas with reduced access or visibility, special precautions will be taken to ensure the safety

of workers on the ground. Sequencing of work shall minimize equipment movement when personnel are in the work area. Moving equipment and workers in the same immediate area is to be avoided. Whenever workers are in the area of operating machinery or vehicular traffic, they shall be provided reflectorized vests.

e. Loaders, track-hoes, and other construction equipment in debris reduction areas shall have lights in the front and back in order to work at night.

f. All articulating grapple (knuckle truck) boom operator stations shall have seat belts that shall be worn by the operator. Access ladders shall be a minimum of 12 in (30.5 cm) width with 16 in (40.6 cm) recommended.

10. TRAFFIC CONTROL.

a. Traffic control is extremely important on highways, in residential areas, and at construction sites. When traffic may pose a hazard to operations, public roads will be closed. Road closings shall be coordinated in writing with appropriate local agencies. Traffic controls and signage should comply with the DOT Federal Highway Administration's "*Manual of Uniform Traffic Control Devices*."

b. When a road cannot be closed, the following precautions shall be taken:

(1) "**MEN WORKING AHEAD**" or similar signs shall be placed along the roadway, 1,000 ft (304.8 m) and 500 ft (152.4 m) before the work zone, on both sides of the work zone;

(2) Sufficient number of flag persons shall be used to control traffic within the work area;

(3) Flag persons shall be used and shall receive instruction in flagging operations before being placed in traffic (training

and certification by the National Safety Council (NSC) is recommended);

(4) All flag persons shall wear steel-toed shoes, international-orange reflective vests, and hard hats;

(5) "**STOP**" and "**GO**" signs, not flags, will be used for traffic control;

(6) Flag persons shall be able to communicate with each other and with the foreman; and

(7) Two-way radios shall be used whenever visual contact between flaggers is not achieved.

c. All construction vehicles and all vehicles exceeding 1 1/2 tons (1360.8 kg) shall have a signal person to assist in backing in residential areas.

11. AIR CURTAIN INCINERATOR OPERATIONS AND DEBRIS PILES.

a. The design of air curtain operations shall provide for efficient burning of materials.

b. Equipment operators feeding and emptying ash from air curtain operations shall, whenever possible, position themselves outside smoke plumes. However, if this is not possible, they will be assured adequate breathing air: filtered air, supplied air, and/or air conditioning in a protected environment. If engineering controls are not immediately available, open equipment may be used if workers are provided with SARs. Workers requiring respirators shall be enrolled in the respiratory protection program in accordance with Section 5. The Contractor shall sample for particulate, CO, heat and specifics of the waste to assure workers are adequately protected through respiratory protection.

c. Adequate supplies of water or fire extinguishers shall be readily available and fire watches shall be used.

d. Air curtain operations shall not be located directly adjacent to debris piles (as a rule of thumb, minimum separation should be 100 ft (30.5 m)). The size of debris piles shall be limited to preclude their overturning.

e. There shall be a 1 ft (0.3 m) high warning barrier the length of the charging side of the pit to warn equipment operators. It should be constructed of incombustible material.

f. No hazardous or containerized ignitable material shall be dumped into the pit.

g. Pits must be constructed out of highly compactable material that will hold its shape (see m below).

h. Water table elevation will govern if pit is constructed above or below grade.

i. For disaster situations, opacity requirements shall be set at 15% for 50 minutes out of an hour, and not to exceed 40% opacity for the remaining 10 minutes. A 30-minute start-up time with a minimum of 40% opacity shall be allowed.

j. Particulate emissions must meet State and EPA standards for burning operations.

k. At least 100 ft (30.5 m) is required between the debris piles and the burn area. At least 1000 ft (304.8 m) is required between the debris piles and the nearest building. At least 1100 ft (335.3 m) is required between the burn pit and the nearest building.

l. The burn should be extinguished approximately 2 hours before anticipated removal of the ash mound. The ash mound should be removed before it reaches 2 ft (0.6 m) below the lip of the burn pit.

m. The burn pits should be made of limestone or equal material, and be reinforced with earth anchors, wire mesh, or other items in order to support the weight of loaders. The edges of the pit should be checked for integrity on regular basis to prevent unexpected cave-ins or collapse. There should be an impervious layer of clay or limestone on the bottom of the pit to attempt to seal the ash from the aquifer. This should be replaced if scraped by dozers.

n. The ends of the pits should be sealed with dirt or material to a height of 4 ft (1.2 m).

o. A 12 in (30.5 cm) soil seal should be placed on the lip of the burn pit to seal the blower nozzle. The nozzle should be 3 in (7.6 cm) to 6 in (15.2 m) from the end of the pit.

p. A 12 in (30.5 cm) soil seal should be placed on the lip of the burn pit to seal the blower nozzle. The nozzle should be 3 in (7.6 cm) to 6 in (15.2 cm) from the end of the pit.

q. The length of the pit should be no longer than the length of the blower system and the pit should be loaded uniformly along the length.

r. The Contractor is responsible for ensuring the public is protected from burn operations. Signs, fences, and other measures can be used depending on site conditions.

s. The Contractor is responsible for dust control while handling ash.

t. Eye washes shall be provided at all burn and grinding operations. ***> See Section 06.***

u. Debris piles shall not be located within 100 ft (30.5 m) of transmission towers or piled directly under transmission lines.

v. For night operations, adequate lighting (5 fc (53.8 lx)) shall be provided in areas surrounding the pits and grinders.

w. Signs shall be posted at entrances to disposal areas indicating "**AUTHORIZED PERSONNEL ONLY**".

x. The Contractor shall notify the local fire department and arrange for fire suppression support in case of fire beyond the Contractor's firefighting capability.

y. A sign shall be posted at the edge of the 100 ft (30.5 m) setback from burn pits warning unauthorized personnel to keep out.

z. All personnel working in debris reduction areas shall wear safety shoes.

12. DEFENSIVE DRIVING. Personnel involved in emergency operations are at increased risk of motor vehicle accidents due to damaged roadways, debris/hazards in roadways, road closings, malfunctioning or missing traffic control devices, and driving under challenging environmental conditions. Safe driving programs shall be instituted and driving safety monitored. Personnel operating off-road vehicles shall be trained, prior to operation, in the use of such equipment.

13. PUBLIC SAFETY. Public safety is important since the majority of work will be performed in the community. Emergency operations present potential hazards to children; problems in defining and keeping the public from work areas; traffic and road debris hazards; utility and structure hazards; and fire and other hazards. Requirements for work area delineation, traffic control devices, and the use of flag persons shall be considered. Public service announcements shall be used as needed to promote safety of the public exposed to USACE activities. Barriers and fencing shall be considered in restricting the public from operation sites.

14. HEALTH HAZARD RECOGNITION. Health hazards such as asbestos, lead paint, radiation, and hazardous chemicals shall be identified and controlled through the recommendations of a qualified industrial hygienist(s). Instrumentation, as required, shall be provided for the detection/measurement of health hazards.

15. ACCIDENT REPORTING.

a. All accidents shall be reported in accordance with AR 385-40 and applicable supplements.

b. Contractor motor vehicle accidents occurring on public highways shall be reported for trend analysis only and shall not be considered recordable.

c. The Geographic District will report accident experience during emergency operations and recovery assistance activities by ENGLink as part of the after action report. This information, as well a information regarding unsatisfactory safety and health performance and/or unresolved safety and health problems, will be periodically reported to Division.

16. VARIANCES TO SAFETY AND HEALTH REQUIREMENTS. The on-site SHM may recommend variances to the requirements contained within this manual to the Geographic District Safety and Occupational Health Office. The Geographic District Safety and Health Office must review the request, concur or non-concur, and send recommended variances to the local Commander for approval. The local Commander shall have the authority to approve or disapprove requests for variances recommended by the local Safety and Health Office. They must be forwarded to higher Commands with request for review. The variances approved by the Geographic District will apply only to the condition(s) and times specified in the request for variance and may not be used as precedence for future non-compliance with safety and health requirements contained within the manual. Geographic District Safety and Occupational Health Offices will exercise prudent judgment in their recommendations for granting variances with due consideration of existing disaster conditions.

APPENDIX C

GUIDELINES FOR CONTROL OF OCCUPATIONAL EXPOSURE TO CRYSTALLINE SILICA AND ABRASIVE BLASTING

1. STANDARDS.

a. Occupational exposure limits. In accordance with Section 6, employee airborne exposure to crystalline silica shall not exceed the 8-hour TWA limit as specified by the ACGIH in their "Threshold Limit Values and Biological Exposure Indices" or by OSHA, whichever is more stringent. Table C-1 provides U.S. guidelines and limits for occupational exposure to crystalline silica established by NIOSH, OSHA, MSHA, and ACGIH as of the date of this manual.

b. Mandatory requirements. OSHA places some mandatory requirements on employers. The first mandatory requirement is that employee exposure be eliminated through the implementation of feasible engineering controls. After all such controls are implemented and they do not control to the PEL, each employer must rotate its employees to the extent possible in order to reduce exposure. Only when all engineering or administrative controls have been implemented, and the level of respirable silica still exceeds PEL, may an employer rely on a respirator program pursuant to the mandatory requirements of 29 CFR 1910.134. Generally where working conditions or other practices constitute recognized hazards likely to cause death or serious physical harm, they must be corrected pursuant to Section 5(a)(1) of the Occupational Safety and Health Act of 1970.

TABLE C-1

U.S. GUIDELINES AND LIMITS FOR OCCUPATIONAL EXPOSURE TO CRYSTALLINE SILICA

Reference	Substance	Guideline or limit (mg/m^3)
NIOSH	Crystalline silica: quartz, cristobalite, and tridymite as respirable dust	REL = 0.05 (for up to 10-hr workday during a 40-hr workweek
OSHA [29 CFR 1910.1000, Table Z-3]	Respirable crystalline silica, quartz	PEL = 10 / %quartz+2 (8-hr TWA)
	Respirable crystalline silica, cristobalite	PEL = half the value calculated from the formula for quartz
MSHA [30 CFR 56, 57, 70, 71]	Respirable quartz in underground and surface metal and nonmetal mines	PEL = 10 / %quartz+2 (8-hr TWA)
	Respirable crystalline silica present in concentrations greater than 5% in surface and under-ground coal mines	RDS = 10 / %quartz (8-hr TWA)
ACGIH [2002]	Respirable crystalline silica, quartz	TLV = 0.05 (8-hr TWA)
	Respirable crystalline silica, cristobalite	TLV = 0.05 (8-hr TWA)
	Respirable crystalline silica, tridymite	TLV = 0.05 (8-hr TWA)

REL = Recommended Exposure Limit - NIOSH
PEL = Permissible Exposure Limit - OSHA
RDS = Respirable Dust Standard - MSHA
TLV = Threshold Limit Value - ACGIH

c. OSHA standards. OSHA does not have a substance specific standard for crystalline silica. Because there is no substance specific OSHA standard, the following recommendations are made to ensure that employee exposure to respirable silica is controlled to acceptable limits. For these guidelines, silica means crystalline silica.

2. MONITORING.

a. Each employer who has a place of employment in which silica is occupationally produced, reacted, released, packaged, repackaged, transported, stored, handled, or used should inspect each workplace and work operation to determine if any employee may be exposed to silica at or above the PEL. Indicators that an evaluation of employee exposure should be undertaken would include:

(1) Any information or observations that would indicate employee exposure to silica or other substances;

(2) Any measurement of airborne silica;

(3) Any employee complaints of symptoms that may be attributable to exposure to silica or other substances;

(4) Any production, process, or control change that may result in an increase in the airborne concentration of silica, or whenever the employer has any other reason to suspect an increase in the airborne concentrations of silica.

b. Air monitoring and analysis. Sampling and analytical methods shall be in accordance with those specified in Section 6.

(1) Employee exposure measurements should represent the actual breathing zone exposure conditions for each employee. Any appropriate combination of long-term or short-term respirable samples would be acceptable, but total sampling time may not be less than 7 hours. In case of

abrasive blasting operations, substances other than silica should be sampled and analyzed.

(2) Accuracy of measurement. The method of monitoring and analysis should have an accuracy of not less than plus or minus 25% for concentrations of airborne silica equal to or greater than the PEL.

(3) Frequency of monitoring. Where the employer has determined that employees are exposed to silica or other substances in excess of the PEL, monitoring should be repeated quarterly.

3. MEDICAL SURVEILLANCE. Each employer should institute a medical surveillance program for all employees who are or will be exposed to airborne concentrations of silica or other substances above the PEL. The employer should provide each employee with an opportunity for a medical examination performed by or under the supervision of a licensed physician and should provide the examination during the employee's normal working hours without cost to the employee.

a. Medical examination.

(1) Each employer should provide a medical examination that includes a complete medical history and physical examination, an annual chest roentgenogram (x-ray), and pulmonary function tests to each employee exposed to silica in excess of the PEL. In the abrasive blasting trade, attention should be paid to potential scarring of the cornea.

(a) A chest roentgenogram (posteroanterior 14 in by 17 in (35.6 cm by 43.2 cm) or 14 in by 14 in (35.6 cm by 35.6 cm)) classified according to the most recent edition of ILO International Classification of Radiographs of Pneumoconioses. [ILO U/C International Classification of Radiographs of Pneumoconioses 1971, Occupational Safety and Health Series 22 (rev), Geneva, International Labor Office, 1972].

(b) Pulmonary function tests including forced vital capacity (FVC) and forced expiratory volume at 1 second (FEV(1)) to provide a baseline for evaluation of pulmonary function and to help determine the advisability of the workers using negative- or positive-pressure respirators. It is recognized that providing such medical examination and recordkeeping of medical data may be difficult for those abrasive-blasting establishments employing transient workers.

(2) Medical examinations should also be made available:

(a) To employees prior to their assignment to areas in which airborne concentrations of silica are above the PEL;

(b) At least annually for each employee exposed to airborne concentrations of silica above the PEL at any time during the preceding 6 months;

(c) Immediately, upon notification by the employee that the employee has developed signs or symptoms commonly associated with chronic exposure to silica.

(3) Where medical examinations are performed, the employer should provide the examining physician with the following information:

(a) The reason for the medical examination requested;

(b) A description of the affected employee's duties as they relate to the employee's exposure;

(c) A description of any PPE used or to be used;

(d) The results of the employee's exposure measurements, if available;

(e) The employee's anticipated or estimated exposure level;

(f) Upon request of the physician, information concerning previous medical examination of the affected employee.

b. Physician's written opinion.

(1) The employer should obtain and furnish the employee with a written opinion from the examining physician containing the following:

(a) The signs or symptoms of silica exposure manifested by the employee, if any;

(b) A report on the findings of the chest roentgenogram and pulmonary function tests;

(c) The physician's opinion as to whether the employee has any detected medical condition that would place the employee at increased risk of material impairment to the employee's health from exposure to silica or other substances or would directly or indirectly aggravate any detected medical condition;

(d) Any recommended limitation upon the employee's exposure to silica or other substances or upon the use of PPE; and

(e) A statement that the employee has been informed by the physician of any medical condition that requires further examination or treatment.

(2) The written opinion obtained by the employer should not reveal specific findings or diagnoses unrelated to occupational exposure to silica or other substances.

(3) If the employer determines, on the basis of the physician's written opinion, that any employee's health would be materially impaired by maintaining the existing exposure to silica or other substances, the employer should place specific limitations, based on the physician's written opinion, on the employee's continued exposure to silica or other substances.

4. TRAINING.

a. Each employee who may be potentially exposed to silica or other substances should be apprised at the beginning of his/her employment or assignment to such an exposure area of the hazards, relevant symptoms, appropriate emergency procedures, and proper conditions and precautions for safe use or exposure.

b. Instruct affected employees to advise the employer of the development of the signs and symptoms of prolonged exposure to silica and other substances.

c. Inform employees of the specific nature of operations that could result in exposure to silica or other substances above the PEL, as well as safe work practices for the handling, use, or release of the silica and the types and function of engineering controls.

d. Instruct employees in proper housekeeping practices.

e. Instruct employees as to the purpose, proper use, and limitations of respirators.

f. Provide employees with a description of, and explain the purposes for, the medical surveillance program.

g. Inform employees where written procedures and health information are available on the premises.

h. Advise employees of the increased risk of impaired health due to the combination of smoking and silica dust exposure.

5. PERSONAL PROTECTIVE DEVICES.

a. Personal protective devices program. Engineering controls shall be used to maintain silica dust exposures below the prescribed limit. When the limits of exposure to silica cannot be met by limiting the concentrations of silica in the work environment by engineering and administrative controls, an employer must use a program of respiratory protection to protect every employee exposed.

b. Respirator selection and usage.

(1) The employer shall select and employees shall use only respirators approved by the NIOSH under 42 CFR 84 to protect employees from dust produced during abrasive-blasting operations. When abrasive blasting is done, the type C supplied-air, positive pressure, demand type abrasive-blasting respirator (a respirator constructed so that it covers the wearer's head, neck, and shoulders to protect from rebounding abrasive) shall be worn according to 29 CFR 1910.94 (a). In addition, see 05.E (in Section 5 of this manual) for selection and use of respiratory protective equipment. Abrasive-blasting respirators shall be worn when working inside of blast-cleaning rooms; when using silica sand in manual blasting operations where the nozzle and blast are not physically separated from the operator in an exhaust ventilated enclosure; where concentrations of toxic dust dispersed by the abrasive blasting may exceed the limits set in 29 CFR 1910.1000; and where the nozzle and blast are not physically separated from the operator in an exhaust-ventilated enclosure. Properly fitted particulate-filter respirators, commonly referred to as dust-filter respirators, may be used for short, intermittent, or occasional dust exposures such as cleanup, dumping of dust collectors, or unloading shipments of sand at a receiving point when it is not feasible to control the dust by enclosure, exhaust

ventilation, or other means. The respirators used must be approved by NIOSH under 42 CFR 84 for protection against the specific type of dust encountered. Dust-filter respirators may be used to protect the operator of outside abrasive-blasting operations where non-silica abrasives are used on materials having low toxicities. Dust-filter respirators shall not be used for continuous protection where silica sand is used as the blasting abrasive, or toxic materials are blasted.

(2) Employees experiencing frequent and continuous breathing difficulty while using respirators should be evaluated by a physician to determine the ability of the worker to wear a respirator.

(3) A respiratory protective program meeting the requirements of 29 CFR 1910.134 shall be established and enforced by the employer.

(4) A respirator specified for use in higher concentrations of airborne silica may be used in atmospheres of lower concentrations.

(5) Employees shall be given instructions on the use of respirators assigned to them, on cleaning respirators, and on testing for leakage.

(6) When employees are exposed to other toxic substances in addition to silica, appropriate combinations of respiratory protection shall be provided.

c. Only those respiratory protection devices shall be used that have a "Tested and Certified" number issued by the NIOSH to the manufacturer of the device.

d. There should be an established in-plant procedure and means and facilities provided to issue respiratory protective equipment, to return used contaminated equipment, to decontaminate and disinfect the equipment, and to repair or

exchange damaged equipment. Recordkeeping of these activities is mandatory.

6. PROTECTIVE CLOTHING. Where exposure to airborne silica or other substances is above the PEL, work clothing should be vacuumed before removal unless it is wet. Clothes should not be cleaned by blowing or shaking.

7. HOUSEKEEPING.

a. All exposed surfaces should be maintained free of accumulation of silica dust, which, if dispersed, would result in airborne concentrations in excess of the PEL.

b. Dry sweeping and the use of compressed air for the cleaning of floors and other surfaces should be prohibited. If vacuuming is used the exhaust air should be properly filtered to prevent generation of airborne respirable silica concentrations. Gentle washdown of surfaces is preferable if practical.

c. Emphasis should be placed upon preventive maintenance and repair of equipment, proper storage of dust producing materials, and collection of dusts containing silica. Sanitation shall meet the requirements of 29 CFR 1910.141.

8. PERSONAL HYGIENE FACILITIES AND PRACTICES.

a. All food, beverages, tobacco products, nonfood chewing products, and unapplied cosmetics should be discouraged in work areas.

b. Employers shall provide an adequate number of lavatories, maintained and provided with soap and towels.

c. Where employees wear protective clothing or equipment, or both, in-plant change rooms should be provided in accordance with 29 CFR 1910.141(e).

9. ENGINEERING CONTROLS.

a. Dust suppression. Moisture, mists, fogs, etc., should be added where such addition can substantially reduce the exposure to airborne respirable silica dust.

b. Ventilation. Where a local exhaust ventilation and collection system is used in a building, it should be designed and maintained to prevent the accumulation or recirculation of airborne silica dust into the workplace. The system should be inspected periodically. Adequate measures should be taken to ensure that any discharge will not produce health hazards to the outside environment.

c. Additional control measures. When mobile equipment is operated in areas of potential silica exposure, engineering controls should be provided to protect the operator from such exposure.

10. ITINERANT WORK. When employees are exposed to airborne silica at temporary work sites away from the plant, emphasis should be placed on respiratory protection, protective clothing, portable engineering controls, and provisions for personal hygiene and sanitation. Training of employees should be provided to protect them as well as others from airborne silica dust exposure to the extent practical.

11. ABRASIVE BLASTING.

a. Introduction.

(1) Consult standards listed in 29 CFR 1910.94(a).

(2) The nature of dust generated in any abrasive-blasting process is the combination of the fragmentation of blasting media and the material dislodged from the surface treated. Where fragmentable abrasives such as sand, shells, alumina, glass bead, or metal shot is used, or where a fragmentable surface such as sand casting, a painted or

scaly surface, or masonry is blasted, the airborne dust generated will vary in particle size and chemical composition. Noise associated with abrasive-blasting operations is also a significant hazard. Heat stress may also be a potential hazard.

(3) Engineering controls for noise and dust should be considered even if they cannot reduce the exposures to PEL but will significantly reduce noise and dust exposure to the employees.

(4) Maximum respiratory protection should be provided when silica sand is used as the abrasive agent or when sand castings are cleaned by blasting.

(5) All production and control systems used in a stationary abrasive-blasting process should be designed or maintained to prevent escape of airborne dust or aerosols in the work environment and to assure control of the abrasive agents.

b. General.

(1) Selection and maintenance of protective equipment.

(a) Select and use respirators in accordance with paragraph 4.b. above and 05.E in Section 5 of this manual.

(b) Air-supplied helmets, ricochet hoods, dust respirators, ear muffs, and safety glasses should be an individual issue item, identified with and used by one employee only. Such equipment should be reissued to another employee only after complete cleaning, repair, and decontamination.

(c) Means should be provided to vacuum, clean, and store air-supplied respiratory equipment after each shift of use. Storage should be in a clean enclosure such as locker, footlocker, or plastic container. The employees

should be trained to maintain the issued equipment in clean condition for their own protection.

(d) Replacement of prescription or plano safety glasses should be made if multiple pitting or etching is visible in the center of the lenses.

(e) Replacement of faceplates in air-supplied helmets, ricochet hoods, or full face masks should take place when a side-on light source produces obscuring visible reflections and glare from the etched spots and pit holes in the faceplate. Mylar coating, or similar transparent plastic material, is recommended to protect the glass or plastic faceplate.

(f) Length of air hose may not be altered from the manufacturer's specifications.

(g) The condition of protective equipment should be checked daily by the employee. Rips, tears, and openings that expose skin to abrasive agents, should be mended. Functional tests for leaks, proper respiration, and good connections should be performed on the complete air-supply system.

(2) Air supply -- portable.

(a) The breathable air supplied to the helmet or ricochet hood should be drawn from an oil and CO free air compressor. In itinerant work, it should be located upwind from the main air compressor to prevent entry of combustion gases into breathable air.

(b) Breathable air-supply system should be equipped, if possible, with audible alarm at the helmet or hood to warn the user of low air pressure.

(3) Hearing protection. Suitable hearing protection, providing at least 20 dB(A) reduction in noise level

experienced, should be worn inside the helmet or ricochet hood unless hearing protection is an integral part of such helmet or hood.

(4) Heat stress. Cooling of breathable air, supplied to the blasting helmets or ricochet hoods, should be considered depending on season and exposure of the employee to heat sources.

c. Work practices.

(1) Indoors blasting cabinets and glove boxes.

(a) Negative pressure should be maintained inside during blasting.

(b) The enclosure should be as complete as practical.

(c) When the inside of the blasting cabinet is cleaned, respiratory protection should be used.

(d) If blasting creates excessive noise, a change of nozzle configuration or application of noise control materials to the enclosure should be considered.

(e) Cabinets should be maintained in good repair including the presence of gaskets.

(2) In-plant blasting rooms.

(a) Negative pressure should be maintained inside during blasting. The room should have exhaust capacity of 1 air change per minute.

(b) Minimum recommended protective equipment of an abrasive blaster working inside a blasting room, in the open, in enclosed space, or outdoors is: safety boots or toe guards; durable coveralls, closeable at wrists, ankles,

and other openings to prevent entry of abrasive dust and rubbing of such; respiratory, eye, and hearing protection; and gauntlet gloves.

(c) If abrasive blasting is automated, the room should not be entered before at least 6 air changes have occurred, as respirable-size dust particles stay airborne for a considerable length of time.

(d) In the room, a cleanup method other than broom sweeping or compressed air blowing should be used to collect the abrasive agent after blasting (e.g., vacuum cleaning). If the blasting agent is removed manually, respiratory protection should be used.

(3) In-plant work area.

(a) If occasional but regular abrasive blasting must be performed inside a building without enclosures, respiratory protection should be provided for all employees in the area. Portable engineering control devices should be used at the location to collect all of the used abrasive agent as it is applied.

(b) When airborne abrasive-blasting dust becomes sufficiently heavy in an area to cause a temporary safety hazard by reduced visibility, or a marked discomfort to the unprotected employees not engaged in abrasive blasting, such operations in the affected area should be discontinued until the airborne dust is removed by exhaust ventilation and the settled dust has been removed from the horizontal surfaces in the area. If such operations have to continue, appropriate respiratory protection should be provided to those employees remaining in the area, provided visibility is adequate.

(c) If wet blasting is employed, airborne dust hazard may exist after evaporation of water.

(4) Confined space. A confined space is a compartment or tank or similar enclosed space in which abrasive blasting, or a preexisting atmosphere, may cause the employee to be overcome by conditions hazardous to life and where egress may be difficult if normal body functions are impaired.

(a) Before starting work, open all access hatches, trap doors, etc., to aid natural ventilation. Mechanical ventilation should be used, picking up air at the furthest point away from the opening if natural ventilation will not cause a complete air change. Consider the other potentially hazardous materials present, such as solvents, crusts of chemicals, or old paint, with regard to explosion or fire potential when blasted.

(b) A "buddy system" should be used -- for each employee inside a confined space; another employee should be available to assist in a potential emergency.

(c) For respiratory protection, a SCBA or air-supplied hood should be used.

(d) Adequate lighting that meets the requirements of NEC 502 should be provided.

(e) If the space is mechanically ventilated, means should be provided to collect dust before release to the open atmosphere.

(5) Outdoors.

(a) Blaster should be protected in a manner equivalent to that mentioned in 29 CFR 1910.94(a)(5).

(b) The pot man should wear the same protective devices available to the blaster, depending on the distance and wind conditions relative to the blasting location.

(c) Prudent care should be taken to prevent the dust cloud from spreading to other work areas.

(d) Hearing protection and respiratory protection should be available to all other employees in the area if their presence is required.

APPENDIX D

ASSURED EQUIPMENT GROUNDING CONDUCTOR PROGRAM

1. PROGRAM OVERVIEW. An assured equipment grounding conductor program consists of a written procedure for documented inspection and testing to assure equipment grounding conductors for all cord sets, receptacles that are not a part of the permanent wiring of the building or structure, and equipment connected by cord and plug are installed and maintained to protect employees on construction sites. An assured equipment grounding conductor program shall be continuously implemented at the construction site.

2. REMOVING EQUIPMENT. Equipment found damaged or defective or which fails any of the prescribed inspections or tests may not be used until repaired or replaced.

3. VISUAL INSPECTIONS. The following shall be visually inspected before each day's use for external defects (such as deformed or missing pins or insulation damage) and for indication of possible internal damage:

a. Cord sets,

b. Attachment caps,

c. Plug and receptacle of cord sets, and

d. Any equipment connected by cord and plug (except cord sets and receptacles that are fixed and not exposed to damage).

4. CONTINUITY TESTING. Equipment grounding conductors on the following shall be tested for continuity and shall be electrically continuous:

a. All cord sets,

b. Receptacles that are not a part of the permanent wiring of the building or structure, and

c. All plug-connected equipment required to be grounded.

5. GROUNDING CONDUCTOR TESTING. Each receptacle and plug of the following shall be tested for correct attachment of the equipment-grounding conductor and the equipment-grounding conductor shall be connected to its proper terminal:

a. All cord sets,

b. Receptacles that are not a part of the permanent wiring of the building or structure, and

c. All plug-connected equipment required to be grounded.

6. TEST FREQUENCY. All required tests shall be performed with the following frequency:

a. Before the first use;

b. Before equipment is returned to service following any repairs;

c. Before equipment is used after any incident that can be reasonably suspected to have caused damage (e.g., when a cord set is run over); and

d. At intervals not to exceed 3 months, except that cord sets and receptacles that are fixed and not exposed to damage shall be tested at intervals not to exceed 6 months.

7. RECORDKEEPING. All inspections and tests shall be documented to identify each receptacle, cord set, and cord- and plug-connected equipment that passed the inspection or test, the date of inspection or test, and the individual responsible for the inspection or test.

APPENDIX E

WOODWORKING MACHINERY GUARDING

The following requirements are restated from 29 CFR 1910.213, Woodworking machinery requirements.

(a) Machine construction general.

(1) Each machine shall be so constructed as to be free from sensible vibration when the largest size tool is mounted and run idle at full speed.

(2) Arbors and mandrels shall be constructed so as to have firm and secure bearing and be free from play.

(3) [Reserved]

(4) Any automatic cutoff saw that strokes continuously without the operator being able to control each stroke shall not be used.

(5) Saw frames or tables shall be constructed with lugs cast on the frame or with an equivalent means to limit the size of the saw blade that can be mounted, so as to avoid over speed caused by mounting a saw larger than intended.

(6) Circular saw fences shall be so constructed that they can be firmly secured to the table or table assembly without changing their alignment with the saw. For saws with tilting tables or tilting arbors the fence shall be so constructed that it will remain in a line parallel with the saw, regardless of the angle of the saw with the table.

(7) Circular saw gages shall be so constructed as to slide in grooves or tracks that are accurately machined, to insure exact alignment with the saw for all positions of the guide.

(8) Hinged saw tables shall be so constructed that the table can be firmly secured in any position and in true alignment with the saw.

(9) All belts, pulleys, gears, shafts, and moving parts shall be guarded in accordance with the specific requirements of OSHA standards 1910.219.

(10) It is recommended that each power-driven woodworking machine be provided with a disconnect switch that can be locked in the off position.

(11) The frames and all exposed, non-current-carrying metal parts of portable electric woodworking machinery operated at more than 90 volts to ground shall be grounded and other portable motors driving electric tools which are held in the hand while being operated shall be grounded if they operate at more than 90 volts to ground. The ground shall be provided through use of a separate ground wire and polarized plug and receptacle.

(12) For all circular saws where conditions are such that there is a possibility of contact with the portion of the saw either beneath or behind the table, that portion of the saw shall be covered with an exhaust hood, or, if no exhaust system is required, with a guard that shall be so arranged as to prevent accidental contact with the saw.

(13) Revolving double arbor saws shall be fully guarded in accordance with all the requirements for circular crosscut saws or with all the requirements for circular ripsaws, according to the kind of saws mounted on the arbors.

(14) No saw, cutter head, or tool collar shall be placed or mounted on a machine arbor unless the tool has been accurately machined to size and shape to fit the arbor.

(15) Combs (featherboards) or suitable jigs shall be provided at the workplace for use when a standard guard cannot be used, as in dadoing, grooving, jointing, moulding, and rabbeting.

(b) Machine controls and equipment.

(1) A mechanical or electrical power control shall be provided on each machine to make it possible for the operator to cut off the power from each machine without leaving his position at the point of operation.

(2) On machines driven by belts and shafting, a locking-type belt shifter or an equivalent positive device shall be used.

(3) On applications where injury to the operator might result if motors were to restart after power failures, provision shall be made to prevent machines from automatically restarting upon restoration of power.

(4) Power controls and operating controls should be located within easy reach of the operator while he is at his regular work location, making it unnecessary for him to reach over the cutter to make adjustments. This does not apply to constant pressure controls used only for setup purposes.

(5) On each machine operated by electric motors, positive means shall be provided for rendering such controls or devices inoperative while repairs or adjustments are being made to the machines they control.

(6) Each operating treadle shall be protected against unexpected or accidental tripping.

(7) Feeder attachments shall have the feed rolls or other moving parts so covered or guarded as to protect the operator from hazardous points.

(c) Hand-fed ripsaws.

(1) Each circular hand-fed ripsaw shall be guarded by a hood which shall completely enclose that portion of the saw above the table and that portion of the saw above the material being cut. The hood and mounting shall be arranged so that the hood will automatically adjust itself to the thickness of and remain in contact with the material being cut but it shall not offer any considerable resistance to insertion of material to saw or to passage of the material being sawed. The hood shall be made of adequate strength to resist blows and strains incidental to reasonable operation, adjusting, and handling, and shall be so designed as to protect the operator from flying splinters and broken saw teeth. It shall be made of material that is soft enough so that it will be unlikely to cause tooth breakage. The hood shall be so mounted as to insure that its operation will be positive, reliable, and in true alignment with the saw; and the mounting shall be adequate in strength to resist any reasonable side thrust or other force tending to throw it out of line.

(2) Each hand-fed circular ripsaw shall be furnished with a spreader to prevent material from squeezing the saw or being thrown back on the operator. The spreader shall be made of hard tempered steel, or its equivalent, and shall be thinner than the saw kerf. It shall be of sufficient width to provide adequate stiffness or rigidity to resist any reasonable side thrust or blow tending to bend or throw it out of position. The spreader shall be attached so that it will remain in true alignment with the saw even when either the saw or table is tilted. The provision of a spreader in connection with grooving, dadoing, or rabbeting is not required. On the completion of such operations, the spreader shall be immediately replaced.

(3) Each hand-fed circular ripsaw shall be provided with nonkickback fingers or dogs so located as to oppose the thrust or tendency of the saw to pick up the material or to throw it back toward the operator. They shall be designed to provide adequate holding power for all the thicknesses of materials being cut.

(d) Hand-fed crosscut table saws.

(1) Each circular crosscut table saw shall be guarded by a hood which shall meet all the requirements of paragraph (c)(1) of this section for hoods for circular ripsaws.

(e) Circular resaws.

(1) Each circular resaw shall be guarded by a hood or shield of metal above the saw. This hood or shield shall be so designed as to guard against danger from flying splinters or broken saw teeth.

(2) Each circular resaw (other than self-feed saws with a roller or wheel at back of the saw) shall be provided with a spreader fastened securely behind the saw. The spreader shall be slightly thinner than the saw kerf and slightly thicker than the saw disk.

(f) Self-feed circular saws.

(1) Feed rolls and saws shall be protected by a hood or guard to prevent the hands of the operator from coming in contact with the in-running rolls at any point. The guard shall be constructed of heavy material, preferably metal, and the bottom of the guard shall come down to within three-eighths inch of the plane formed by the bottom or working surfaces of the feed rolls. This distance 10 mm (3/8-in) may be increased to 20 mm (3/4 in), provided the lead edge of the hood is extended to be not less than 140 mm (5-1/2 in) in front of the nip point between the front roll and the work.

(2) Each self-feed circular ripsaw shall be provided with sectional non-kickback fingers for the full width of the feed rolls. They shall be located in front of the saw and so arranged as to be in continual contact with the wood being fed.

(g) Swing cutoff saws. The requirements of this paragraph are also applicable to sliding cutoff saws mounted above the table.

(1) Each swing cutoff saw shall be provided with a hood that will completely enclose the upper half of the saw, the arbor end, and the point of operation at all positions of the saw. The hood shall be constructed in such a manner and of such material that it will protect the operator from flying splinters and broken saw teeth. Its hood shall be so designed that it will automatically cover the lower portion of the blade, so that when the saw is returned to the back of the table the hood will rise on top of the fence, and when the saw is moved forward the hood will drop on top of and remain in contact with the table or material being cut.

(2) Each swing cutoff saw shall be provided with an effective device to return the saw automatically to the back of the table when released at any point of its travel. Such a device shall not depend for its proper functioning upon any rope, cord, or spring. If there is a counterweight, the bolts supporting the bar and counterweight shall be provided with cotter pins; and the counterweight shall be prevented from dropping by either a bolt passing through both the bar and counterweight, or a bolt put through the extreme end of the bar, or, where the counterweight does not encircle the bar, a safety chain attached to it.

(3) Limit chains or other equally effective devices shall be provided to prevent the saw from swinging beyond the front or back edges of the table, or beyond a forward position where the gullets of the lowest saw teeth will rise above the table top.

(4) Inverted swing cutoff saws shall be provided with a hood that will cover the part of the saw that protrudes above the top of the table or above the material being cut. It shall automatically adjust itself to the thickness of and remain in contact with the material being cut.

(h) Radial saws.

(1) The upper hood shall completely enclose the upper portion of the blade down to a point that will include the end of the saw arbor. The upper hood shall be constructed in such a manner and of such material that it will protect the operator from flying

splinters, broken saw teeth, etc., and will deflect sawdust away from the operator. The sides of the lower exposed portion of the blade shall be guarded to the full diameter of the blade by a device that will automatically adjust itself to the thickness of the stock and remain in contact with stock being cut to give maximum protection possible for the operation being performed.

(2) Each radial saw used for ripping shall be provided with nonkickback fingers or dogs located on both sides of the saw so as to oppose the thrust or tendency of the saw to pick up the material or to throw it back toward the operator. They shall be designed to provide adequate holding power for all the thicknesses of material being cut.

(3) An adjustable stop shall be provided to prevent the forward travel of the blade beyond the position necessary to complete the cut in repetitive operations.

(4) Installation shall be in such a manner that the front end of the unit will be slightly higher than the rear, so as to cause the cutting head to return gently to the starting position when released by the operator.

(5) Ripping and ploughing shall be against the direction in which the saw turns. The direction of the saw rotation shall be conspicuously marked on the hood. In addition, a permanent label not less than 38 mm (1-1/2 in) by 20 mm (3/4 in) shall be affixed to the rear of the guard at approximately the level of the arbor, reading as follows: "Danger: Do Not Rip or Plough From This End".

(i) Bandsaws and band resaws.

(1) All portions of the saw blade shall be enclosed or guarded, except for the working portion of the blade between the bottom of the guide rolls and the table. Bandsaw wheels shall be fully encased. The outside periphery of the enclosure shall be solid. The front and back of the band wheels shall be either enclosed by solid material or by wire mesh or perforated metal. Such

mesh or perforated metal shall be not less than 1 mm (0.037 in (U.S. Gage No. 20)), and the openings shall be not greater than 10 mm (3/8 in). Solid material used for this purpose shall be of an equivalent strength and firmness. The guard for the portion of the blade between the sliding guide and the upper-saw-wheel guard shall protect the saw blade at the front and outer side. This portion of the guard shall be self-adjusting to raise and lower with the guide. The upper-wheel guard shall be made to conform to the travel of the saw on the wheel.

(2) Each bandsaw machine shall be provided with a tension control device to indicate a proper tension for the standard saws used on the machine, in order to assist in the elimination of saw breakage due to improper tension.

(3) Feed rolls of band resaws shall be protected with a suitable guard to prevent the hands of the operator from coming in contact with the in-running rolls at any point. The guard shall be constructed of heavy material, preferably metal, and the edge of the guard shall come to within 10 mm (3/8 in) of the plane formed by the inside face of the feed roll in contact with the stock being cut.

(j) Jointers.

(1) Each hand-fed planer and jointer with horizontal head shall be equipped with a cylindrical cutting head, the knife projection of which shall not exceed 3 mm (1/8 in) beyond the cylindrical body of the head.

(2) The opening in the table shall be kept as small as possible. The clearance between the edge of the rear table and the cutter head shall be not more than 3 mm (1/8 in). The table throat opening shall be not more than 64 mm (2-1/2 in) when tables are set or aligned with each other for zero cut.

(3) Each hand-fed jointer with a horizontal cutting head shall have an automatic guard which will cover all the section of the head on the working side of the fence or gage. The guard shall

effectively keep the operator's hand from coming in contact with the revolving knives. The guard shall automatically adjust itself to cover the unused portion of the head and shall remain in contact with the material at all times.

(4) Each hand-fed jointer with horizontal cutting head shall have a guard which will cover the section of the head back of the gage or fence.

(5) Each wood jointer with vertical head shall have either an exhaust hood or other guard so arranged as to enclose completely the revolving head, except for a slot of such width as may be necessary and convenient for the application of the material to be jointed.

(k) Tenoning machines.

(1) Feed chains and sprockets of all double end tenoning machines shall be completely enclosed, except for that portion of chain used for conveying the stock.

(2) At the rear ends of frames over which feed conveyors run, sprockets and chains shall be guarded at the sides by plates projecting beyond the periphery of sprockets and the ends of lugs.

(3) Each tenoning machine shall have all cutting heads, and saws if used, covered by metal guards. These guards shall cover at least the unused part of the periphery of the cutting head. If such a guard is constructed of sheet metal, the material used shall be not less than 2 mm (1/16 in) in thickness, and if cast iron is used, it shall be not less than 5 mm (3/16 in) in thickness.

(4) Where an exhaust system is used, the guard shall form part or all of the exhaust hood and shall be constructed of metal of a thickness not less than that specified in subparagraph (3) of this paragraph.

(l) Boring and mortising machines.

(1) Safety-bit chucks with no projecting set screws shall be used.

(2) Boring bits should be provided with a guard that will enclose all portions of the bit and chuck above the material being worked.

(3) The top of the cutting chain and driving mechanism shall be enclosed.

(4) If there is a counterweight, one of the following or equivalent means shall be used to prevent its dropping:

(I) It shall be bolted to the bar by means of a bolt passing through both bar and counterweight;

(ii) A bolt shall be put through the extreme end of the bar;

(iii) Where the counterweight does not encircle the bar, a safety chain shall be attached to it;

(iv) Other types of counterweights shall be suspended by chain or wire rope and shall travel in a pipe or other suitable enclosure wherever they might fall and cause injury.

(5) Universal joints on spindles of boring machines shall be completely enclosed in such a way as to prevent accidental contact by the operator.

(6) Each operating treadle shall be covered by an inverted U-shaped metal guard, fastened to the floor, and of adequate size to prevent accidental tripping.

(m) Wood shapers and similar equipment.

(1) The cutting heads of each wood shaper, hand-fed panel raiser, or other similar machine not automatically fed, shall be enclosed with a cage or adjustable guard so designed as to keep the operator's hand away from the cutting edge. The diameter of circular shaper guards shall be not less than the greatest diameter of the cutter. In no case shall a warning device of leather or other material attached to the spindle be acceptable.

(2) [Reserved]

(3) All double-spindle shapers shall be provided with a spindle starting and stopping device for each spindle.

(n) Planing, molding, sticking, and matching machines.

(1) Each planing, molding, sticking, and matching machine shall have all cutting heads, and saws if used, covered by a metal guard. If such guard is constructed of sheet metal, the material used shall be not less than 2 mm (1/16 in) in thickness, and if cast iron is used, it shall be not less than 5 mm (3/16 in) in thickness.

(2) Where an exhaust system is used, the guards shall form part or all of the exhaust hood and shall be constructed of metal or a thickness not less than that specified in paragraph (h)(1) of this section.

(3) Feed rolls shall be guarded by a hood or suitable guard to prevent the hands of the operator from coming in contact with the in-running rolls at any point. The guard shall be fastened to the frame carrying the rolls so as to remain in adjustment for any thickness of stock.

(4) Surfacers or planers used in thicknessing multiple pieces of material simultaneously shall be provided with sectional infeed rolls having sufficient yield in the construction of the sections to

provide feeding contact pressure on the stock, over the permissible range of variation in stock thickness specified or for which the machine is designed. In lieu of such yielding sectional rolls, suitable section kickback finger devices shall be provided at the infeed end.

(o) Profile and swing-head lathes and wood heel turning machine.

(1) Each profile and swing-head lathe shall have all cutting heads covered by a metal guard. If such a guard is constructed of sheet metal, the material used shall be not less than 2 mm (1/16 in) in thickness; and if cast iron is used, it shall not be less than 5 mm (3/16 in) in thickness.

(2) Cutting heads on wood-turning lathes, whether rotating or not, shall be covered as completely as possible by hoods or shields.

(3) Shoe last and spoke lathes, doweling machines, wood heel turning machines, and other automatic wood-turning lathes of the rotating knife type shall be equipped with hoods enclosing the cutter blades completely except at the contact points while the stock is being cut.

(4) Lathes used for turning long pieces of wood stock held only between the two centers shall be equipped with long curved guards extending over the tops of the lathes in order to prevent the work pieces from being thrown out of the machines if they should become loose.

(5) Where an exhaust system is used, the guard shall form part or all of the exhaust hood and shall be constructed of metal of a thickness not less than that specified in subparagraph (1) of this paragraph.

(p) Sanding machines.

(1) Feed rolls of self-feed sanding machines shall be protected with a semicylindrical guard to prevent the hands of the operator

from coming in contact with the in-running rolls at any point. The guard shall be constructed of heavy material, preferably metal, and firmly secured to the frame carrying the rolls so as to remain in adjustment for any thickness of stock. The bottom of the guard should come down to within 10 mm (3/8 in) of a plane formed by the bottom or contact face of the feed roll where it touches the stock.

(2) Each drum sanding machine shall have an exhaust hood, or other guard if no exhaust system is required, so arranged as to enclose the revolving drum, except for that portion of the drum above the table, if a table is used, which may be necessary and convenient for the application of the material to be finished.

(3) Each disk sanding machine shall have the exhaust hood, or other guard if no exhaust system is required, so arranged as to enclose the revolving disk, except for that portion of the disk above the table, if a table is used, which may be necessary for the application of the material to be finished.

(4) Belt sanding machines shall be provided with guards at each nip point where the sanding belt runs on to a pulley. These guards shall effectively prevent the hands or fingers of the operator from coming in contact with the nip points. The unused run of the sanding belt shall be guarded against accidental contact.

(q) Veneer cutters and wringers.

(1) Veneer slicer knives shall be guarded to prevent accidental contact with knife edge, at both front and rear.

(2) Veneer clippers shall have automatic feed or shall be provided with a guard which will make it impossible to place a finger or fingers under the knife while feeding or removing the stock.

(3) Sprockets on chain or slat-belt conveyors shall be enclosed.

(4) Where practicable, hand and footpower guillotine veneer cutters shall be provided with rods or plates or other satisfactory means, so arranged on the feeding side that the hands cannot reach the cutting edge of the knife while feeding or holding the stock in place.

(5) Power-driven guillotine veneer cutters, except continuous feed trimmers, shall be equipped with:

(I) Starting devices which require the simultaneous action of both hands to start the cutting motion and of at least one hand on a control during the complete stroke of the knife; or

(ii) An automatic guard which will remove the hands of the operator from the danger zone at every descent of the blade, used in conjunction with one-hand starting devices which require two distinct movements of the device to start the cutting motion, and so designed as to return positively to the nonstarting position after each complete cycle of the knife.

(6) Where two or more workers are employed at the same time on the same power-driven guillotine veneer cutter equipped with two-hand control, the device shall be so arranged that each worker shall be required to use both hands simultaneously on the controls to start the cutting motion, and at least one hand on a control to complete the cut.

(7) Power-driven guillotine veneer cutters, other than continuous trimmers, shall be provided, in addition to the brake or other stopping mechanism, with an emergency device which will prevent the machine from operating in the event of failure of the brake when the starting mechanism is in the nonstarting position.

(r) Miscellaneous woodworking machines.

(1) The feed rolls of roll type glue spreaders shall be guarded by a semicylindrical guard. The bottom of the guard shall come

to within 10 mm (3/8 in) of a plane formed by bottom or contact face of the feed roll where it touches the stock.

(2) Drag saws shall be so located as to give at least a 1.2 m (4 ft) clearance for passage when the saw is at the extreme end of the stroke; or if such clearance is not obtainable, the saw and its driving mechanism shall be provided with a standard enclosure.

(3) For combination or universal woodworking machines each point of operation of any tool shall be guarded as required for such a tool in a separate machine.

(4) The mention of specific machines in paragraphs (a) thru (q) and this paragraph (r) of this section, inclusive, is not intended to exclude other woodworking machines from the requirement that suitable guards and exhaust hoods be provided to reduce to a minimum the hazard due to the point of operation of such machines.

(s) Inspection and maintenance of woodworking machinery.

(1) Dull, badly set, improperly filed, or improperly tensioned saws shall be immediately removed from service, before they begin to cause the material to stick, jam, or kick back when it is fed to the saw at normal speed. Saws to which gum has adhered on the sides shall be immediately cleaned.

(2) All knives and cutting heads of woodworking machines shall be kept sharp, properly adjusted, and firmly secured. Where two or more knives are used in one head, they shall be properly balanced.

(3) Bearings shall be kept free from lost motion and shall be well lubricated.

(4) Arbors of all circular saws shall be free from play.

(5) Sharpening or tensioning of saw blades or cutters shall be done only by persons of demonstrated skill in this kind of work.

(6) Emphasis is placed upon the importance of maintaining cleanliness around woodworking machinery, particularly as regards the effective functioning of guards and the prevention of fire hazards in switch enclosures, bearings, and motors.

(7) All cracked saws shall be removed from service.

(8) The practice of inserting wedges between the saw disk and the collar to form what is commonly known as a "wobble saw" shall not be permitted.

(9) Push sticks or push blocks shall be provided at the work place in the several sizes and types suitable for the work to be done.

(10)-(11) [Reserved]

(12) The knife blade of jointers shall be so installed and adjusted that it does not protrude more than one-eighth inch beyond the cylindrical body of the head. Push sticks or push blocks shall be provided at the work place in the several sizes and types suitable for the work to be done.

(13) Whenever veneer slicers or rotary veneer-cutting machines have been shutdown for the purpose of inserting logs or to make adjustments, operators shall make sure that machine is clear and other workmen are not in a hazardous position before starting the machine.

(14) Operators shall not ride the carriage of a veneer slicer.

[39 FR 23502, June 27, 1974, as amended at 43 FR 49750, Oct. 24, 1978; 49 FR 5323, Feb. 10, 1984]

APPENDIX F

RIGGING INSPECTION AND REMOVAL CRITERIA

Rigging shall be inspected by a competent person and replaced in accordance with ANSI/ASME B30.9 and the manufacturer's recommendations. Rigging degradation not only indicates that the rigging is becoming unsafe and requires replacement; it also often indicates problem(s) with the rigging setup, use, or maintenance. Evidence of failure is cause for replacement of the rigging. At the minimum, rigging shall be inspected for the following failure modes:

1. WIRE ROPE.

a. Broken wires: for strand laid and single part slings, ten randomly distributed broken wires in one rope or five broken wires in one strand in one rope lay; for cable laid and braided slings, see Table F-1.

TABLE F-1

INSPECTING WIRE ROPE FOR BROKEN WIRES

Sling body	Allowable broken wires per lay or one braid	Allowable broken wires per sling length
less than 8-part braid	20	1
cable laid	20	1
8-part or more	40	1

b. Severe localized abrasion or scraping.

c. Kinking, crushing, birdcaging, protruding core, or any other damage resulting in distortion of the rope structure.

d. Severe corrosion of the rope or end fittings.

e. Evidence of electric arc or heat damage.

f. Excessive pitting or corrosion, or cracked, distorted, or broken fittings.

g. Diameter reduction:

(1) Reductions of 1/64 in (.04 cm) for diameters up to and including 5/16 in (.79 cm);

(2) Reductions of 1/32 in (.08 cm) for diameters 3/8 in (.95 cm) up to and including 1/2 in (1.3 cm);

(3) Reductions of 3/64 in (.12 cm) for diameters 9/16 in (1.4 cm) up to and including 3/4 in (1.9 cm);

(4) Reductions of 1/16 in (.15 cm) for diameters 7/8 in (2.1 cm) diameter up to and including 1-1/8 in (2.8 cm);

(5) Reductions of 3/32 in (.24 cm) for diameters 7/8 in (2.1 cm) up to and including 1-1/2 in (3.8 cm).

h. Significant stretching of the wire rope beyond the initial construction stretch.

i. Any sign of metal fatigue or other visible damage that causes doubt as to the strength of the wire rope.

2. FIBER ROPE.

a. Broken or cut fibers, either internally or externally.

b. Cuts, gouges, abrasions; seriously or abnormally worn fibers.

c. Powdered fiber or particles of broken fiber inside the rope between the strands.

d. Variations in size or roundness of strands.

e. Discoloration or rotting; weakened or brittle fibers.

f. Excessive pitting or corrosion, or cracked, distorted, or broken fittings.

g. Kinks.

h. Melting or charring of the rope.

i. Other visible damage that causes doubt as to the strength of the rope.

3. CHAIN. Inspect chains on an individual link basis. Chains shall be cleaned before they are inspected, as dirt and grease can hide nicks and cracks.

a. Wear: Replacement shall be as scheduled in Table F-2.

b. Stretch: Compare the chain with its rated length or with a new length of chain. If the length is increased 3%, the chain must be thoroughly inspected. If the length is increased by 5% or more, the chain shall be replaced.

c. Deformed links: Deformed (twisted or bent) links, or any chain in which a link assembly does not hinge freely with the adjoining link.

d. Cuts, gouges, or nicks: If the depth of the cut or gouge exceeds the value shown in Table F-2, the assembly shall be replaced.

e. Cracks: Cracks and other visible damage that causes doubt as to the strength of the chain.

TABLE F-2

ALLOWABLE CHAIN WEAR

Nominal Chain Size	Maximum allowable wear of diameter
9/32 in (0.7 cm)	0.037 in (.09 cm)
3/8 in (0.9 cm)	0.052 in (.13 cm)
1/2 in (1.3 cm)	0.069 in (.18 cm)
5/8 in (1.5 cm)	0.084 in (.21 cm)
3/4 in (1.9 cm)	0.105 in (.27 cm)
7/8 in (2.1 cm)	0.116 in (.29 cm)
1 in (2.5 cm)	0.137 in (.35 cm)
1-1/4 in (3.1 cm)	0.169 in (.43 cm)

4. METAL MESH SLINGS.

a. Broken weld or brazed joint along the sling edge.

b. Broken wire in any part of the mesh.

c. Reduction in wire diameter of 25% due to abrasion or 15% due to corrosion.

d. Lack of flexibility due to distortion of the mesh.

e. Distortion of the choker fitting so that the depth of the slot is increased by more than 10%.

f. Distortion of either end fitting so the width of the eye opening is decreased by more than 10%.

g. A 15% reduction of the original cross-sectional area of metal at any point around the hook opening of end fitting.

h. Excessive pitting or corrosion of fittings; broken or cracked fittings; distortion of either end fitting out of its plane.

i. Other visible damage that causes doubt as to the strength of the sling.

5. SYNTHETIC WEBBING SLINGS.

a. Acid or caustic burns.

b. Melting or charring of any part of the sling.

c. Snags, holes, tears, or cuts.

d. Broken or worn stitches.

e. Excessive abrasive wear.

f. Knots in any part of the sling.

g. Wear or elongation exceeding the amount recommended by the manufacturer.

h. Excessive pitting or corrosion, or cracked, distorted, or broken fittings.

i. Other visible damage that causes doubt as to the strength of the sling.

6. ATTACHMENTS.

a. Hooks that have been opened more than 15% of the normal throat opening (measured at the narrowest point) or twisted more than 10% from the plane of the unbent hook.

b. Deformed master links and coupling links.

c. Assemblies with cracked hooks or other end fittings.

d. Excessive pitting or corrosion, or distorted or broken fittings.

e. Other visible damage that causes doubt as to the strength of the attachment.

APPENDIX G

PROCEDURES FOR THE EXAMINATION AND QUALIFICATION OF CRANE OPERATORS

1. EXAMINATION PROCEDURES.

a. It is USACE policy that Commanders select, train, test, and license vehicle and equipment operators, and that all military and civilian personnel have a Standard Form (SF) 46 and demonstrate their proficiency in order to operate cranes and other material handling equipment. In addition, it is required that equipment operators successfully complete a written evaluation test to prove their technical knowledge of the equipment, and to satisfactorily demonstrate their proficiency in the operation of each type of crane, for which they are to be licensed.

b. It is recommended that each USACE Command select in-house crane examiners and that the Commander designate these individuals in writing. Examiners shall be trained and certified by an independent source, such as a commercial certifying group. Examiners will examine and qualify the Command's crane operators based on criteria in this Appendix. For Commands with few crane operators, where an in-house examiner would not be cost effective, operators should be examined and qualified by a commercial certifying group based on criteria in paragraphs 2 and 3, below.

c. The phrase "Only those operators qualified to operate a particular type of machinery may operate that type of machinery" applies to both USACE and Contractor operators. Again, this is not a new requirement. OSHA, through ANSI/ASME B30.5, requires crane operators to be qualified. Paragraph 5-3.1.2 of ANSI/ASME B30.5 requires that operators pass a written or oral examination and a practical operating examination unless able to furnish satisfactory evidence of qualifications and experience. Contractor crane and derrick

operators are required to be designated as qualified operators by a source that qualifies crane and derrick operators. This includes independent testing and qualifying company or agencies; unions; governmental agencies; or qualified consultants.

d. The phrase "type of crane or derrick" refers to the following:

(1) Mobile crane, lattice boom.

(2) Mobile crane, telescopic boom crane.

(3) Articulating boom (boom truck) crane.

(4) Floating crane or floating derrick.

(5) Gantry crane.

(6) Portal or pillar crane.

(7) Overhead crane.

(8) Tower crane.

(9) Derrick.

(10) Monorail or underhung crane.

2. WRITTEN OR ORAL EXAMINATION REQUIREMENTS. Crane operators shall pass a written or oral examination that demonstrates their knowledge of the following:

a. Responsibilities of operator, rigger, signalpersons, and lift supervisor;

b. Knowledge of USACE crane safety requirements and the crane's operator manual;

c. Ability to determine the crane configuration, compute the size and shape of loads, and determine the crane's capacity using the load chart;

d. Use and limitations of crane operator aids;

e. Inspection, testing, and maintenance requirements;

f. Determination of ground conditions and outrigger and matting requirements;

g. Crane set-up, assembly, dismantling, and demobilization procedures;

h. Requirements for clearance from power sources;

i. Signaling and communication procedures;

j. Factors that reduce rated capacity; and

k. Emergency control skills.

3. PRACTICAL EXAMINATION REQUIREMENTS. Crane operators shall pass a practical operating examination that demonstrates their ability to perform the following:

a. Inspecting the crane;

b. Establishing a stable foundation and leveling the crane;

c. Raising, lowering, extending, retracting, and swinging the boom;

d. Raising and lowering the load line;

e. Attaching the load, holding the load, and moving the load; and

f. Reading load, boom angle, and other indicator devices.

4. PHYSICAL QUALIFICATIONS.

a. Operators shall have a current physician's certification that the operator meets the following physical qualifications:

(1) Vision of at least 20/30 Snellen in one eye and 20/50 in the other, with or without corrective lenses;

(2) Normal depth perception and field of vision;

(3) Ability to distinguish colors, regardless of position;

(4) Adequate hearing, with or without hearing aid, for the specific operation;

(5) Sufficient strength, endurance, agility, coordination, manual dexterity, and speed of reaction to meet the demands of equipment operation; and

(6) No tendencies to dizziness or similar undesirable characteristics.

b. Evidence of physical defects, emotional instability that could render a hazard to the operator, others, or safe operation of the crane, or evidence that the operator is subject to seizures or loss of physical control shall be sufficient reason for disqualification. In such cases, specialized medical tests may be required to determine these conditions and their effects.

5. EDUCATIONAL SKILLS. Operators shall demonstrate their ability to read, write, comprehend, and exhibit arithmetic skills and load/capacity chart usage, in the language of the crane manufacturer’s operation and maintenance instruction materials.

APPENDIX H

CRANE AND DERRICK INSPECTION CRITERIA

1. INSPECTION FREQUENCY. Crane and derrick inspection frequency are provided in Table H-1.

2. CRITERIA FOR STARTUP INSPECTIONS

a. All control mechanisms for maladjustment interfering with proper operation.

b. All control mechanisms for excessive wear of components and contamination by lubricants or other foreign matter.

c. All operator aids, motion devices, LLD, and other safety devices for malfunction and inaccuracy of settings.

d. All chords and lacing.

e. All hydraulic and pneumatic systems - with particular emphasis given to those that flex in normal operation of the crane.

f. Hooks and latches for deformation, chemical damage, cracks, and wear.

g. Rope for proper spooling onto the drum(s) and sheave(s) and rope reeving for compliance with crane manufacturer's specifications.

h. Electrical apparatus for malfunctioning, signs of excessive deterioration, dirt, and moisture accumulation.

i. Hydraulic system for proper oil level.

j. Tires for recommended inflation pressure (mobile cranes).

TABLE H-1

CRANE AND DERRICK INSPECTION FREQUENCY

When to inspect	Type of Inspection
Prior to initial use - all new cranes [a]	Initial inspection
Prior to use - all altered cranes [b]	Initial inspection
Prior to initial use on a USACE project [c]	Periodic inspection
Periodically (1-12 months) after initial use on a USACE project	Periodic inspection
Prior to every operation (shift)	Start-up inspection
Before using a crane that is not in use on a regular basis and that has been idle for more than 1 month, but less than 6 months [d]	Frequent inspection
Before using a crane that is not in use on a regular basis and that has been idle for more than 6 months [d]	Periodic inspection
Standby cranes, at least semi-annually [e]	Frequent inspection
Standby cranes, prior to use [f]	Frequent inspection

Notes:

(a) Performed by the manufacturer.

(b) "Altered" is defined as any change to the original manufacturer's design configuration, that is, replacement of weight handling equipment parts and components with parts or components.

(c) Initial use refers to (1) the first time the USACE takes possession of and assembles a crane, or (2) whenever a Contractor brings a crane onto a job site and assembles the crane.

(d) This requirement is in addition to the requirement for a periodic inspection.

(e) Standby cranes are those cranes that are not used on a regular basis but are available - on a standby basis - for emergencies (e.g., emergency operations & maintenance (O&M) work); requirements for frequent inspections of standby cranes are in addition to the requirement for a periodic inspection.

(f) In addition to the semi-annual frequent inspection, a frequent inspection shall be conducted prior to use.

k. Wedges and supports for looseness or dislocation (climbing tower cranes).

l. Braces and guys supporting crane masts; anchor bolt base connections for looseness or loss of preload (tower cranes and derricks).

m. Derrick mast fittings and connections for compliance with manufacturer's recommendations.

n. Barge or pontoon ballast compartments for proper ballast; deckloads for proper securing; chain lockers, storage, fuel compartments, and battening of hatches; firefighting and lifesaving equipment in place and functional; hull void compartments sounded for leakage (floating cranes and derricks).

o. Check brake actions and ensure brakes are functioning normally and that there is no slippage, excessive play, or binding. Exercise brakes to assure they are dry.

3. CRITERIA FOR PERIODIC INSPECTIONS

a. Foundation or supports for continued ability to sustain imposed loads.

b. Braces supporting crane masts (towers) for safe condition; anchor bolt base connections for tightness or retention of preload; wedges and supports of climbing cranes for tightness and proper positioning.

c. Guys for proper tension.

d. For derricks, inspect all chords and lacing, tension in guys, plump of the mast, and derrick mast fittings and connections for compliance with manufacturer's recommendations.

e. Crane structure and boom and jib members, and their connections, for absence of deformation, cracks, or corrosion.

f. Bolts, rivets, nuts, and pins for tightness.

g. Proper tension (torque) of high strength (traction) bolts used in connections and at the slewing bearing.

h. Power plants for performance and compliance with safety requirements.

i. Electrical apparatus for proper functioning and absence of signs of excessive deterioration, dirt, and moisture accumulation.

j. Hydraulic and pneumatic tanks, pumps, motors, valves, hoses, fittings, and tubing for proper functioning and absence of damage, leaks, and excessive wear; hydraulic and pneumatic systems for proper fluid/air levels.

k. All control mechanisms for adjustment for proper operation, no excessive wear of components, and absence of contamination by lubricants or other foreign matter.

l. Drive components such as pins, bearings, wheels, shafts, gears, sheaves, drums, rollers, locking and clamping devices, sprockets, drive chains or belts, bumpers, and stops for absence of wearing, cracks, corrosion, or distortion.

m. All crane function operating mechanisms for proper operation, proper adjustment, and the absence of unusual sounds.

n. Travel, steering, holding, braking, and locking mechanisms for proper functioning and absence of excessive wear or damage.

o. Tires for damage or excessive wear.

p. Brake and clutch system parts, linings, pawls, and ratchets for absence of excessive wear.

q. Wire rope. Visually inspect all running ropes; visually inspect all counterweight ropes and load trolley ropes, if provided. Visual inspections should concentrate on discovering gross damage, such as that listed below, that may be an immediate hazard: particular attention should be given to boom hoist ropes and sections of rope subject to rapid deterioration such as at flange points, crossover points, and repetitive pickup points on drums. Care shall be taken when inspecting rope sections subject to rapid deterioration, such as the following: sections in contact with saddles, equalizer sheaves, or other sheaves where rope travel is limited; sections of the rope at or near terminal ends where corroded or broken wires may protrude; sections subject to reverse bends; and sections of rope that are normally hidden during routine visual inspections, such as parts passing over outer sheaves.

(1) Distortion of rope such as kinking, crushing, unstranding, birdcaging, main strand displacement, core protrusion;

(2) General corrosion;

(3) Number, distribution, and type of visible broken wires;

(4) Broken or cut strands;

(5) Core failure in rotation resistant ropes (care shall be taken when inspecting rotation resistant ropes because of their susceptibility to damage from misuse and potential for deterioration when used on equipment with limited design parameters).

(6) Reduction of rope diameter below nominal diameter due to loss of core support, internal or external corrosion, or wear of outside wires.

(7) Severely corroded or broken wires at end connections; severely corroded, cracked, bent, worn, or improperly applied end connections.

r. Sheaves for the absence of cracks in the flanges and spokes.

s. Rope for proper spooling onto drum(s) and sheave(s) and proper reeving.

t. Hooks and latches for absence of deterioration, chemical damage, cracks, and wear.

u. Crane operator aids (safety devices) and indicating devices for proper operation.

v. Motion limiting devices for proper operation with the crane unloaded (each motion should be inched into its limiting device to run in at slow speed with care exercised) and load limiting devices for proper operation and accuracy of settings.

w. Load, boom angle, load or load moment indicating, wind, and other indicators for proper operation and accuracies within the tolerances recommended by the manufacturer.

x. Safety and function labels for legibility and replacement.

y. For floating plant, inspect ballast compartments for proper ballast; deckloads for proper securing; safety of chain lockers, storage, fuel compartments; battening of hatches; hull void compartments sounded for leakage; tie-downs for barge-mounted land cranes for absence of wear, corrosion, and tightness; cleats, bitts, chocks, fenders, capstans, ladders, stanchions for absence of corrosion, wear, deterioration, and deformation; take four corner draft readings.

4. CRITERIA FOR FREQUENT INSPECTIONS

a. Braces supporting crane masts (towers) for safe condition; anchor bolt base connections for tightness or retention of preload; wedges and supports of climbing cranes for tightness and proper positioning.

b. Guys for proper tension.

c. For derricks, inspect all chords and lacing, tension in guys, plump of the mast, and derrick mast fittings and connections for compliance with manufacturer's recommendations.

d. Electrical apparatus for proper functioning and absence of signs of excessive deterioration, dirt, and moisture accumulation.

e. Hydraulic and pneumatic tanks, pumps, motors, valves, hoses, fittings, and tubing for proper functioning and absence of damage, leaks, and excessive wear; hydraulic and pneumatic systems for proper fluid/air levels.

f. All control mechanisms for adjustment for proper operation, no excessive wear of components, and absence of contamination by lubricants or other foreign matter.

g. All crane function operating mechanisms for proper operation, proper adjustment, and the absence of unusual sounds.

h. Wire rope. Visually inspect all running ropes; visually inspect all counterweight ropes and load trolley ropes, if provided. Visual inspections should concentrate on discovering gross damage, such as that listed below, which may be an immediate hazard: particular attention should be given to boom hoist ropes and sections of rope subject to rapid deterioration such as at flange points, crossover points, and repetitive pickup points on drums.

(1) Distortion of rope such as kinking, crushing, unstranding, birdcaging, main strand displacement, core protrusion;

(2) General corrosion;

(3) Number, distribution, and type of visible broken wires;

(4) Broken or cut strands;

(5) Core failure in rotation resistant ropes (care shall be taken when inspecting rotation resistant ropes because of their susceptibility to damage from misuse and potential for deterioration when used on equipment with limited design parameters).

(6) Reduction of rope diameter below nominal diameter due to loss of core support, internal or external corrosion, or wear of outside wires.

(7) Severely corroded or broken wires at end connections; severely corroded, cracked, bent, worn, or improperly applied end connections.

i. Rope for proper spooling onto drum(s) and sheave(s) and proper reeving.

j. Hooks and latches for absence of deterioration, chemical damage, cracks, and wear.

k. Crane operator aids (safety devices) and indicating devices for proper operation.

l. Motion limiting devices for proper operation with the crane unloaded (each motion should be inched into its limiting device to run in at slow speed with care exercised) and LLD for proper operation and accuracy of settings.

m. Load, boom angle, load or load moment indicating, wind, and other indicators for proper operation and accuracies within the tolerances recommended by the manufacturer.

n. Safety and function labels for legibility and replacement.

o. For floating plant, inspect ballast compartments for proper ballast; deckloads for proper securing; safety of chain lockers, storage, fuel compartments; battening of hatches; hull void compartments sounded for leakage.

APPENDIX I

CRANE TESTING REQUIREMENTS FOR PERFORMANCE TESTS

1. PERFORMANCE TESTING.

a. Performance testing includes both operational performance testing and load performance testing. The following tables and their associated guidelines are of a general nature. For any crane, the manufacturer's guidance has precedence over this general guidance and the manufacturer's guidance shall be followed.

b. The following sequence and limitation shall be complied with when conducting performance tests:

(1) Test rigging first.

(2) Conduct the operational performance test before the load performance test.

(3) Test the main hoist before testing the auxiliary or whip hoists.

(4) Test loads shall be raised only to a height sufficient to perform the test.

2. OPERATIONAL PERFORMANCE TESTING. Operational performance testing shall include the tests specified in Table I-1, as defined below.

X1 = Load hoist operation and limit switch test.

(1) Raise the load hook through all controller points stopping below the upper limit switch (where applicable);

TABLE I-1

CRANE PERFORMANCE TESTING REQUIREMENTS - NO-LOAD TESTS

	Type of Crane						
Test	**Portal**	**Floating**	**Tower and derricks**	**Hammer-head (3)**	**Mobile (4)**	**Bridge/ overhead traveling, wall and gantry**	**Jib, pillar, monorail and fixed hoist**
X1	■(1)	■(1)	■(1)	■(1)	■(1)	■(1)	■(1)
X2	■	■	■	■	■(5)		
X3	■	■	■	■			
X4	■	■	■	■			
X5	■	■	■(2)	■			
X6	■	■	■	■			
X7	■	■	■	■			
X8				■		■	■
X9						■	
X10					■		■

Notes:
(1) Conduct for main, auxiliary, and whip hoists, as applicable.
(2) Conduct rotation tests through normal design operating arc.
(3) Conduct hoist tests in combinations such that all structural, mechanical, and electrical components are tested in all possible configurations.
(4) Complete tests shall be performed on each hook. Extend outriggers or stabilizers as specified by the manufacturer. Level the crane as specified by the manufacturer's load chart. Rotate the boom 90° from the longitudinal axis of the crane carrier and position the boom at the minimum working radius.
(5) Conduct fixed boom or telescopic boom, as appropriate.

(2) Slowly raise load hook into the upper limit switch to establish that limit switch is operating properly;

(3) Slowly raise hook through the upper limit switch by using limit switch bypass (where applicable);

(4) Lower load hook below the upper limit switch using all the lowering control points;

(5) Slowly lower load hook into the lower limit switch to establish that limit switch is operating properly.

X2 = Boom hoist operation and limit switch test, fixed boom.

(1) Raise boom through all controller points, stopping below upper limit switch;

(2) Slowly raise boom into the upper limit switch;

(3) Lower boom below upper limit switch and raise boom through limit switch by using limit switch bypass (where applicable);

(4) Lower boom through all controller points, stopping above lower limit switch (where applicable);

(5) Slowly lower boom into the lower limit switch (where applicable);

(6) Raise boom above lower limit switch and lower boom through limit switch by using limit switch bypass (where applicable).

X2t = Boom hoist operation and limit switch test, telescopic boom. In addition to test X2, conduct the following:

(1) Extend and retract telescoping boom sections the full distance of travel;

(2) Check the radius indicator by measuring the radius at the minimum and maximum boom angle.

X3 = Luffing drum pawl test.

(1) Check luffing drum pawl for proper engagement in ratchet gear and with limit switch;

(2) Ensure luffing drum pawl is disengaged;

(3) Check the luffing drum pawl limit switch (if installed) for proper operation by operating the boom hoist and manually (at the pawl) activating the limit switch;

(4) Check that boom hoist motor shuts off, brake engages, and indicator lights operate correctly (where applicable).
CAUTION: Do not engage pawl in the ratchet gear.

X4 = Rotation lock test (wind lock, spud lock).

(1) Engage rotation lock and inspect to ensure full engagement;

(2) Check that rotation lock limit switches (clockwise and counterclockwise) prevent engaging rotation drive (where applicable);

(3) Operate rotation lock bypass (clockwise and counterclockwise) to ensure proper operation (where applicable.
CAUTION: Use only enough power to check operation of bypass; ensure rotation lock is disengaged prior to continuing test.
NOTE: Applicable switches may be operated manually to check for correct operation in lieu of engaging rotation lock.

X5 = Rotation test. Rotate clockwise and counterclockwise with boom at minimum radius.

X6 = Travel test. Conduct operation travel test as prescribed in L14, except without load.

X7 = Deadman control test. Test all deadman controls (where installed):

(1) Start each motion;

(2) Release deadman control - motion should stop.

X8 = Trolley test.

(1) Trolley the allowable length of the trolley runway using all control points;

(2) Operate trolley into the limit switches at slow speed;

(3) Bring trolley back, and by using the limit switch bypass move trolley into the outboard rail stops;

(4) Repeat above procedure for inboard limit switches and rail stops.

X9 = Bridge test.

(1) Operate the bridge travel controller through all points in both directions;

(2) Operate the full distance of the runway and slowly contact the runway rail stops with the crane bridge bumpers.

X10 = Other motions test. Test other motions, including swing, by operating through one cycle (one full revolution of major components).

3. LOAD PERFORMANCE TESTING. Load performance testing shall include the tests specified in Table I-2, as defined below.

TABLE I-2

CRANE PERFORMANCE TESTING REQUIREMENTS - AT-LOAD TESTS

	Type of Crane						
Test	**Portal (1)**	**Floating (1)**	**Tower and derricks (1)**	**Hammer-head (1)**	**Mobile (1,5)**	**Bridge/ overhead traveling, wall and gantry**	**Jib, pillar, monorail and fixed hoist**
L1	■	■	■	■			
L2(2)	■	■	■	■(4)	■z	■	■
L3(2)	■	■	■	■(4)	■	■	■
L4(2)	■	■	■	■	■	■	■
L5	■	■	■	■(4)	■z		
L6(2)	■	■	■	■(4)	■	■b	■b
L7	■	■	■		•		
L8	■	■	■				
L9(2)	■	■	■	■(4)		■b	■b
L10	■	■	■				
L11	■	■	■(3)	■	■(6)		
L12	■	■	■	■			
L13	■		■	■			
L14	■		■	■			
L15						■b	■b

L16						■	
L17					■		
L18					■		
L19						■	
L20						■	
L21							■

TABLE I-2 (CONTINUED)

CRANE PERFORMANCE TESTING REQUIREMENTS - AT-LOAD TESTS

Notes:
(1) All subtests under the test designation are required as applicable.
(2) For variable-rated cranes, perform the applicable variable-rated crane tests in addition to any other required tests.
(3) Conduct for main, auxiliary, jib, and whip hoists.
(4) Conduct rotation tests through normal design operating arc.
(5) Conduct hoist tests in combinations such that all structural, mechanical and electrical components are tested in all possible configurations.
(6) Complete tests shall be performed on each hook. Extend the outriggers or stabilizers as specified by the manufacturer. Level the crane as specified by the manufacturer's load chart. Rotate the boom 90° from the longitudinal axis of the crane carrier and position the boom at the minimum working radius.
(7) Rotate the maximum degrees allowed by the manufacturer. Tests shall be performed with boom fully retracted and fully extended.

L1 = Stability test. During tests L2m, L3m, L5, and L11, observe roller clearance and roller lift-off from roller path.

L1v = Stability test, variable-rated crane. Conduct tests L2m, L3m, and L11 with test load on main hoist at maximum radius of the crane: observe roller clearance and roller lift off from roller path.

L2m = Load and boom hoist static test, main hoist.

(1) Raise test load to clear ground and hold for 10 minutes with boom at maximum radius;

(2) Rotate load to check bearing operation;

(3) Do not engage boom or load hoist pawl;

(4) Observe lowering that may occur which indicates malfunction of boom or hoisting components or holding brakes or outriggers;

(5) For all cranes, repeat test (except for step (2)) at minimum radius, maximum load, and boom fully extended, minimum radius, and maximum load for that radius.

L2a = Load hoist static test, auxiliary hoist.

(1) Raise test load to clear ground and hold for 10 minutes without hoist pawl engaged;

(2) Rotate load to check bearing operation - observe lowering that may occur which will indicate malfunction of hoisting components or holding brakes.

L2w = Load hoist static test, whip hoist.

(1) Raise test load to clear ground and hold for 10 minutes;

(2) Rotate load to check operation of bearing - observe lowering that may occur which will indicate malfunction of hoisting components or holding brakes.

L3m = Load hoist dynamic test, main hoist.

(1) Raise and lower test load on each hoist controller point and visually observe smooth control between points;

(2) Lower the test load to unload the hoist components, wait 5 minutes, and continue testing.

L3a = Load hoist dynamic test, auxiliary hoist. Raise and lower test load on each controller point and visually observe smooth control between points.

L3v = Load hoist dynamic test, main hoist, variable-rated crane. Conduct test L3m at the maximum radius of the crane.

L3w = Load hoist dynamic test, whip hoist. Raise and lower test load on each controller point and visually observe smooth control between points.

L4 = Wire rope test. During either the static or dynamic test, where possible, test the entire working length of the wire rope.

L5 = Boom hoist operating test. Visually observe for smooth rotation between boom controller points:

(1) Starting from maximum radius, raise the boom to minimum radius using all boom controller points;

(2) Lower the boom through all controller points.

L5z = Boom hoist operating test, mobile crane. Operate the boom from the minimum radius to maximum radius for the load applied; for hydraulic cranes, test shall be performed with boom fully retracted and fully extended; perform test at both maximum test load for crane and for maximum test load at maximum radius of crane.

L6 = Hoist foot brake test (hydraulic or mechanical brake). Lower test load, using first control point, then apply the foot brake: this should stop the lowering motion of the test load. ***CAUTION: Not applicable to load-sensitive reactor type hoist controls.***

L6b = Hoist load brake.

(1) Raise test load approximately 5 ft (1.5 m);

(2) With hoist controller in the neutral position, release (by hand) the holding brake - the load brake should hold the test load;

(3) Again, with holding brake in the released position, start the test load down (first point) and return the controller to off position as the test load lowers - the load brake should prevent the test load from accelerating.
NOTE: It is not necessary for the load brake to halt the downward motion of the test load.

L7 = Boom foot brake test (hydraulic or mechanical brake)

(1) Start with boom near maximum radius and with test load approximately 2 ft (0.6 m) from ground surface;

(2) Lower test load using the first control point of the boom hoist;

(3) Apply the foot brake - this should stop the lowering motion of the boom and load.
CAUTION: Not applicable to load-sensitive reactor type hoist controls.

L8 = Automatic boom brake (where applicable). This brake is to prevent a "free" boom in case of failure of clutch, boom hoist control, and foot brake:

(1) Raise the boom to minimum radius and with the test load approximately 4 in (10.1 cm) above the ground, set the boom foot brake firmly;

(2) Release the mechanical boom dog;

(3) Release the boom clutch by operating the boom hoist control;

(4) Slowly release the foot brake to the free position;

(5) Hold the test load with automatic brake for 5 minutes, then lower test load by applying the boom hoist clutch and lowering with the controller operation.

L8v = Automatic boom brake, variable-rated crane (where applicable). Conduct test L8 at the maximum radius of the crane.

L9 = Load hoist loss of power (panic test). This test is designed to test the reaction of a hoisting unit in the event of power failure during a lift:

(1) Hoist the test load approximately 3 m (10 ft) above the ground at maximum allowable radius;

(2) Lower test load at slow speed and with the controller in the slow lowering position, disconnect the main power source by pushing the main power stop button(s);

(3) Return the controller to the neutral position - the test load should stop lowering when the controller is placed in the neutral position.
CAUTION: This test is not to be performed on cranes that do not have powered-down boom and load hoists.

L9b = Load hoist loss of power (panic test). This test is designed to test the reaction of a hoisting unit in the event of power failure during a lift:

(1) Hoist the test load to convenient distance above the surface;

(2) Lower test load at slow speed and with the controller in the slow lowering position, disconnect the main power source and return the controller to the neutral position - the test load should stop lowering when the controller is placed in the neutral position.
NOTE: Air operated hoists should be vented during this test.

L10 = Boom hoist loss of power (panic test). This test is designed to test the reaction of the boom hoist in the event of power failure during a lift:

(1) Hoist the test load approximately 10 ft (3 m) above the ground with the boom near maximum radius;

(2) Lower the boom at slow speed, disconnect the main power source by pushing the main power stop button(s), then return the controller to the neutral position - the boom should stop lowering when the controller is placed in the neutral position.
CAUTION: This test is not to be performed on cranes that do not have powered down boom and load hoists.

L11 = Rotation test. Start with the boom at maximum radius, rotate left and right 360°.
NOTE: If test area will not permit, two complete revolutions of the swing pinion are considered adequate.
CAUTION: Care should be exercised when rotating loads over the water and ensure during the initial load-test the floating crane has adequate draft readings per design data.

L12 = Rotate brake test. Rotate left and right at slow speed and apply brakes, individually, periodically during rotation: each brake should demonstrate its ability to stop the rotating motion in a smooth, positive manner.

L13 = Travel motion test. This test shall be conducted with the boom at maximum allowable radius positioned 90° with the crane rails and boom dog engaged.
CAUTION: Operate crane at very slow travel speed; ensure track and supporting foundation are sound and free of any obstructions over the test travel areas (not applicable to floating cranes).

L14 = Travel operation test.

(1) With the test load raised to clear the ground and with the boom centered between the crane rails and the boom dog engaged, travel in one direction a minimum of 50 ft (15.2);

(2) Operate the controller through all controller points - the crane should accelerate and decelerate smoothly and all motions should be smooth and positive;

(3) Repeat in the opposite direction.

L15 = Trolley motion test.

(1) Raise test load to clear ground and move trolley to the maximum allowable radius - do not move trolley beyond the trolley limit switch;

(2) Hold test load for 10 minutes;

(3) Lower test load to ground until hoist lines are slack;

(4) Wait 5 minutes, raise test load and trolley the allowable length of the trolley runway.

L15b = Trolley motion test. Operate trolley with test load (if space is available) the full distance of the bridge rails using extreme caution: observe proper brake operation.

L16 = Bridge motion test. Operate bridge with test load (if space is available) the full distance of the runway using extreme caution and observe for any binding of bridge trucks and for proper brake operation.

L17 = Hydraulic crane slippage.

(1) Lift the test load at maximum radius and allow time for fluid and component temperatures to stabilize;

(2) Hold the load for 10 minutes without use of controls by the operator - there shall be no significant lowering of the load, boom, or outrigger beams due to components or systems malfunction or failure during the test.

L18 = Free-rated load test. This is a test to check stability of crane and operation of crane carrier, wheels, tires, tracks, brakes, etc., under load. ***Note: Retract outriggers prior to beginning free-rated load test.***

(1) Hoist maximum free rated test load at its maximum radius over the rear;

(2) Rotate through the "over the rear" working arc and travel a minimum of 50 ft (15.2 m) with test load over the rear of crane with boom parallel to the longitudinal axis of the crane carrier;

(3) Hoist maximum free rated test load at its maximum radius over the side;

(4) Rotate through the full working range and travel a minimum of 50 ft (15.2) with test load over the left and right side of the crane carrier with the boom 90° to the axis of travel.

L19 = Primary and secondary holding brakes. For cranes with primary and secondary holding brakes (configuration of crane where a primary brake actuates when controller is returned to the neutral position and secondary brake actuates a few seconds later) and/or eddy current hoist dynamic load brakes):

(1) During either the static or dynamic test, raise the test load and observe the proper timing sequence in the application of the primary and secondary brake when controller is returned to neutral (visually observe both hoist holding brakes to ensure correct position);

(2) Raise test load approximately 1 ft (0.3 m), hold for 10 minutes, and inactivate the secondary holding brake while testing the primary holding brake - observe for noticeable lowering of test load that may occur which will indicate malfunction of hoisting components or brakes;

(3) Re-engage secondary holding brake and release the primary holding brake and hold for 10 minutes - observe for noticeable lowering of test load that may occur which will indicate malfunction of hoisting components or brakes;

(4) Re-engage the primary holding brake - recheck proper operation of time delay and ensure smooth positive stopping.

L20 = Hoist dynamic load brake (eddy current). Check lowering speed against specifications to ensure correct brake operation. ***NOTE: Eddy current brakes will not stop motion.***

L21 = Swing test (where applicable). Swing the test load (where space is available) through the working range at maximum radius, stopping the load at several points: there should be no excessive drift of jib or trolley at any of these points (the significance of drift shall be evaluated).

4. REQUIREMENTS FOR BOOM STOP TESTS. Boom stop tests shall follow these steps.

Step 1: Check for availability of appropriate operator manual.

Step 2: Make sure crane is level with outriggers (if so equipped) in place.

Step 3: Check boom and boom stops for misalignment, bent parts, and other physical damage.

Step 4: Check boom stop pins (at connections) for lubrication, wear, and damage.

Step 5: Check boom angle indicator with inclinometer for correctness.

Step 6: Check boom hoist disengaging device for proper adjustment and proper angle in accordance with the operator's manual.

Step 7: Check for proper operational setup of the boom stops and boom hoist disengaging device. Physically boom up the boom just to the points listed below as long as the boom does not go beyond the point of operation of the boom hoist disengaging device. It is not the intent of this test to override the boom hoist disengaging device.

a. For cantilever or scissors types, this is the point just before the boom and boom stops touch.

b. For telescoping types, this is the point just prior to compression.

APPENDIX J

LADDERS, RAMPS, STAIRS AND FIXED LADDERS

1. FIXED LADDERS: DESIGN REQUIREMENTS

a. Design considerations. All ladders, appurtenances, and fastenings shall be designed to meet the following load requirements:

(i) The minimum design live load shall be a single concentrated load of 200 lb (90.7 kg).

(ii) The number and position of additional concentrated live-load units of 200 lb (90.7 kg) each as determined from anticipated usage of the ladder shall be considered in the design.

(iii) The live loads imposed by persons occupying the ladder shall be considered to be concentrated at such points as will cause the maximum stress in the structural member being considered.

(iv) The weight of the ladder and attached appurtenances together with the live load shall be considered in the design of rails and fastenings.

b. Design stresses. Design stresses for wood components of ladders shall not exceed those specified in 29 CFR 1910.25. All wood parts of fixed ladders shall meet the requirements of 29 CFR 1910.25(b). For fixed ladders consisting of wood side rails and wood rungs or cleats, used at a pitch in the range 75° to 90°, and intended for use by no more than 1 person per section, single ladders as described in 29 CFR 1910.25(c)(3)(ii) are acceptable.

2. FIXED LADDERS: SPECIFIC FEATURES

a. Rungs and cleats.

(i) All rungs shall have a minimum diameter of 3/4 in (1.9 cm) for metal ladders, except as covered in subparagraph g.(i) below, and a minimum diameter of 1-1/8 in (2.9 cm) for wood ladders.

(ii) The distance between rungs, cleats, and steps shall not exceed 12 in (30.5 cm) and shall be uniform throughout the length of the ladder.

(iii) The minimum clear length of rungs or cleats shall be 16 in (40.6 cm).

(iv) Rungs, cleats, and steps shall be free of splinters, sharp edges, burrs or projections which may be a hazard.

(v) The rungs of an individual-rung ladder shall be so designed that the foot cannot slide off the end. A suggested design is shown in Figure J-1.

FIGURE J-1

SUGGESTED DESIGN FOR RUNGS ON INDIVIDUAL-RUNG LADDERS

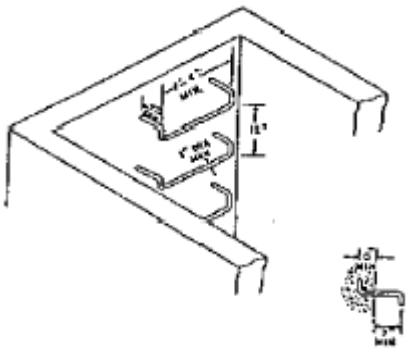

b. Side rails. Side rails that might be used as a climbing aid shall be of such cross sections as to afford adequate gripping surface without sharp edges, splinters, or burrs. Horizontal grab bars shall be provided for proper grip on side rail extensions for walk-through ladders

c. Fastenings. Fastenings shall be an integral part of fixed ladder design.

d. Splices. All splices made by whatever means shall meet design requirements as noted in paragraph 1 above. All splices and connections shall have smooth transition with original members and with no sharp or extensive projections.

e. Electrolytic action. Adequate means shall be employed to protect dissimilar metals from electrolytic action when such metals are joined.

f. Welding. All welding shall be in accordance with ANSI/AWS D1.0.

g. Protection from deterioration.

(i) Metal ladders and appurtenances shall be painted or otherwise treated to resist corrosion and rusting when location demands. Ladders formed by individual metal rungs imbedded in concrete, which serve as access to pits and to other areas under floors, are frequently located in an atmosphere that causes corrosion and rusting. To increase rung life in such atmosphere, individual metal rungs shall have a minimum diameter of 1 in (2.5 cm) or shall be painted or otherwise treated to resist corrosion and rusting.

(ii) Wood ladders, when used under conditions where decay may occur, shall be treated with a nonirritating preservative, and the details shall be such as to prevent or minimize the accumulation of water on wood parts.

(iii) When different types of materials are used in the construction of a ladder, the materials used shall be so treated as to have no deleterious effect one upon the other.

3. FIXED LADDERS: CLEARANCE

a. Climbing side. On fixed ladders, the perpendicular distance from the centerline of the rungs to the nearest permanent object on the climbing side of the ladder shall be 36 in (91.4 cm) for a pitch of 76°, and 30 in (76.2 cm) for a pitch of 90° (see Figure J-2), with minimum clearances for intermediate pitches varying between these two limits in proportion to the slope, except as provided in subparagraphs c and d below.

b. Ladders without cages or wells. A clear width of at least 15 in (38.1 cm) shall be provided each way from the centerline of the ladder in the climbing space, except when cages or wells are necessary.

c. Ladders with cages or baskets. Ladders equipped with cage or basket are excepted from the provisions of subparagraphs a and b above, but shall conform to the provisions of paragraph 4.a.(v) below. Fixed ladders in smooth-walled wells are excepted from the provisions of subparagraph a above, but shall conform to the provisions of paragraph 4.a.(vi) below.

d. Clearance in back of ladder. The distance from the centerline of rungs, cleats, or steps to the nearest permanent object in back of the ladder shall be not less than 7 in (17.8 cm), except when unavoidable obstructions are encountered, minimum clearances as shown in Figure J-3 shall be provided.

e. Clearance in back of grab bar. The distance from the centerline of the grab bar to the nearest permanent object in back of the grab bars shall be not less than 4 in (10.1 cm). Grab bars shall not protrude on the climbing side beyond the rungs of the ladder that they serve.

FIGURE J-2

RAIL LADDER WITH BAR STEEL RAILS AND ROUND STEEL RUNGS

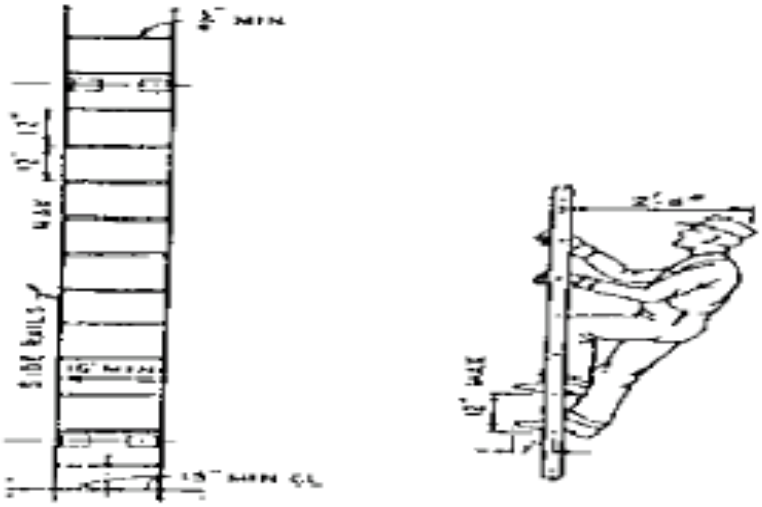

FIGURE J-3

CLEARANCE FOR UNAVOIDABLE OBSTRUCTION AT REAR OF FIXED LADDER

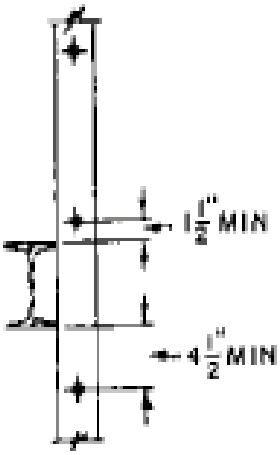

f. Step-across distance. The step-across distance from the nearest edge of ladder to the nearest edge of equipment or structure shall be not more than 12 in (30.5 cm), or less than 2-1/2 in (6.4 cm) (Figure J-4).

g. Hatch cover. Counter weighted hatch covers shall open a minimum of 60° from the horizontal. The distance from the centerline of rungs or cleats to the edge of the hatch opening on the climbing side shall be not less than 24 in (61.0 cm) for offset wells or 30 in (76.2 cm) for straight wells. There shall be not protruding potential hazards within 24 in (61.0 cm) of the centerline of rungs or cleats; any such hazards within 30 in (76.2 cm) of the centerline of the rungs or cleats shall be fitted with deflector plates placed at an angle of 60° from the horizontal as indicated in Figure J-5. The relationship of a fixed ladder to an acceptable counter weighted hatch cover is illustrated in Figure J-6.

h. Openings shall be provided with elevated horizontal grab bars to facilitate access and exit from upper levels.

FIGURE J-4

LADDER FAR FROM WALL

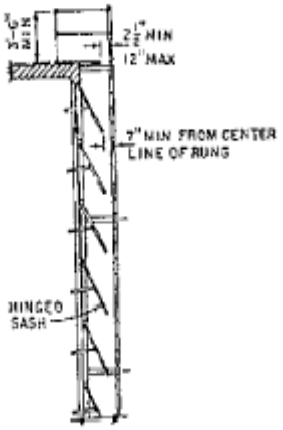

FIGURE J-5

DEFLECTOR PLATES FOR HEAD HAZARDS

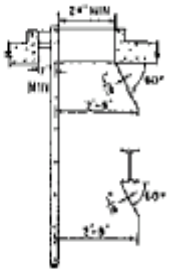

FIGURE J-6

RELATIONSHIP OF FIXED LADDER TO A SAFE ACCESS HATCH

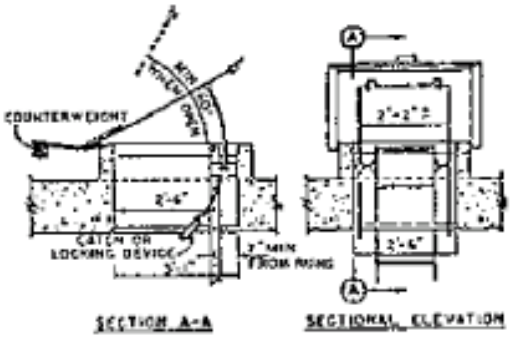

4. FIXED LADDERS: SPECIAL REQUIREMENTS

a. Cages or wells.

(i) Cages or wells (except on chimney ladders) shall be built, as shown on the applicable drawings, covered in detail in Figures J-7, J-8, and J-9, or of equivalent construction.

FIGURE J-7

CAGES FOR LADDERS MORE THAN 20 FT (6.1 M) HIGH

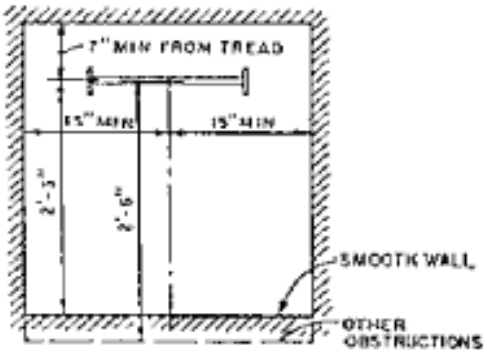

FIGURE J-8

CLEARANCE DIAGRAM FOR FIXED LADDER IN WELL

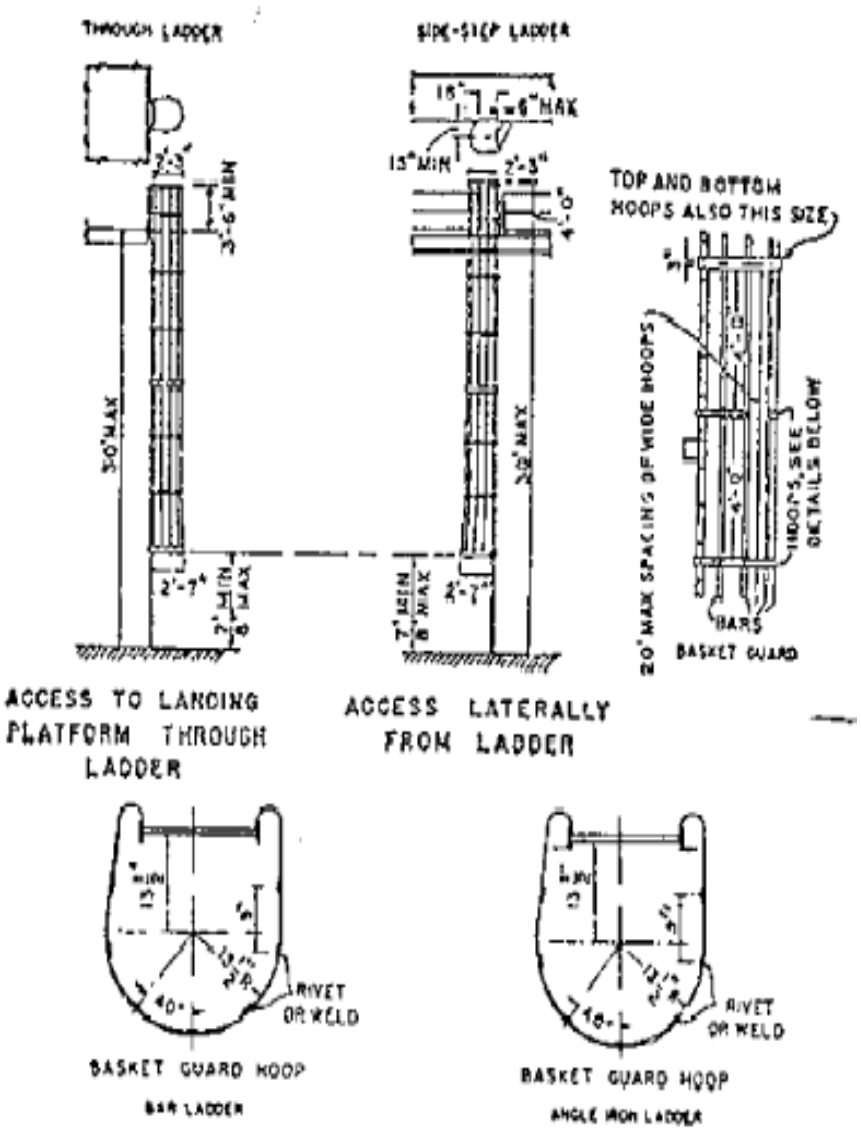

FIGURE J-9

CAGES - SPECIAL APPLICATIONS

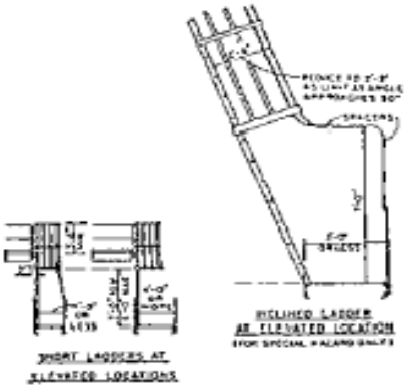

FIGURE J-10

OFFSET FIXED LADDER SECTIONS

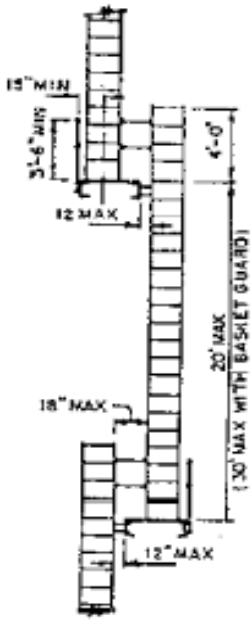

(ii) Cages or wells (except as provided in subparagraph e below conforming to the dimensions shown in Figures J-7, J-8, and J-9 shall be provided on ladders of more than 20 ft (6.1 m) to a maximum unbroken length of 30 ft (9.1 m).

(iii) Cages shall extend a minimum of 42 in (106.7 cm) above the top of landing, unless, other acceptable protection is provided.

(iv) Cages shall extend down the ladder to a point not less

than 7 ft (2.1 m) nor more than 8 ft (2.4 m) above the base of the ladder, with bottom flared not less than 4 in (10.1 cm), or portion of cage opposite ladder shall be carried to the base.

(v) Cages shall not extend less than 27 in (68.6 cm) nor more than 28 in (71.1 cm) from the centerline of the rungs of the ladder. Cage shall not be less than 27 in (68.6 cm) in width. The inside shall be clear of projections. Vertical bars shall be located at a maximum spacing of 40° degrees around the circumference of the cage; this will give a maximum spacing of approximately 9-1/2 in (24.1 cm), center to center.

(vi) Ladder wells shall have a clear width of at least 15 in (38.1 cm) measured each way from the centerline of the ladder. Smooth-walled wells shall be a minimum of 27 in (68.6 cm) from the centerline of rungs to the well wall on the climbing side of the ladder. Where other obstructions on the climbing side of the ladder exist, there shall be a minimum of 30 in (76.2 cm) from the centerline of the rungs.

b. Landing platforms. When ladders are used to ascend to heights exceeding 20 ft (6.1 m) (except on chimneys), landing platforms shall be provided for each 30 ft (9.1 m) of height or fraction thereof, except that, where no cage, well, or ladder safety device is provided, landing platforms shall be provided for each 20 ft (6.1 m) of height or fraction thereof. Each ladder section shall be offset from adjacent sections. Where installation conditions (even for a short, unbroken length) require that adjacent sections be offset, landing platforms shall be provided at each offset.

(i) Where a climber has to step a distance greater than 12 in (30.5 cm) from the centerline of the rung of a ladder to the nearest edge of structure or equipment, a landing platform shall be provided. The minimum step-across distance shall be 2-1/2 in (6.4 cm).

(ii) All landing platforms shall be equipped with standard railings and toeboards, so arranged as to give safe access to the ladder. Platforms shall be not less than 24 in (61.0 cm) in width and 30 in (76.2 cm) in length.

(iii) One rung of any section of ladder shall be located at the level of the landing laterally served by the ladder. Where access to the landing is through the ladder, the same rung spacing as used on the ladder shall be used from the landing platform to the first rung below the landing.

c. Ladder extensions. The side rails of through or side-stepladder extensions shall extend 3-1/2 ft (1.1 m) above parapets and landings. For through ladder extensions, the rungs shall be omitted from the extension and shall have not less than 18 in (45.7 cm) nor more than 24 in (61.0 cm) clearance between rails. For side-step or offset fixed ladder sections, at landings, the side rails and rungs shall be carried to the next regular rung beyond or above the 3-1/2 ft (1.1 m) minimum (Figure J-10).

d. Grab bars. Horizontal grab bars shall be provided to facilitate grip in case of a fall. Grab bars shall be spaced by a continuation of the rung spacing when they are located in the horizontal position. Vertical grab bars shall have the same spacing as the ladder side rails. Grab-bar diameters shall be the equivalent of the round-rung diameters.

e. Ladder safety devices. Ladder safety devices may be used on tower, water tank, and chimney ladders over 20 ft (6.1 m) in unbroken length in lieu of cage protection. No landing platform is required in these cases. All ladder safety devices such as those that incorporate life belts, friction brakes, and sliding attachments shall meet the design requirements of the ladders that they serve.

5. LADDERS, RAMPS, AND STAIRS: PITCH

a. Preferred pitch. The preferred pitch of fixed ladders shall be considered to come in the range of 75° and 90° with the horizontal (Figure J-11).

b. Substandard pitch. Fixed ladders shall be considered as substandard if they are installed within the substandard pitch range of 60° and 75° with the horizontal. Substandard fixed ladders are permitted only where it is found necessary to meet conditions of installation. This substandard pitch range shall be considered as a critical range to be avoided, if possible.

c. Scope of coverage in this section. This section covers only fixed ladders within the pitch range of 60° and 90° with the horizontal.

d. Pitch greater than 90°. Ladders having a pitch in excess of 90° with the horizontal are prohibited.

6. LADDER MAINTENANCE. All ladders shall be maintained in a safe condition. All ladders shall be inspected regularly, with the intervals between inspections being determined by use and exposure.

7. JOB MADE LADDERS. Job made ladders will be made following the design of ANSI A14.4. Examples of some requirements are displayed in Figures J-12 through J-21.

FIGURE J-11

SLOPE OF LADDERS, RAMPS, AND STAIRS

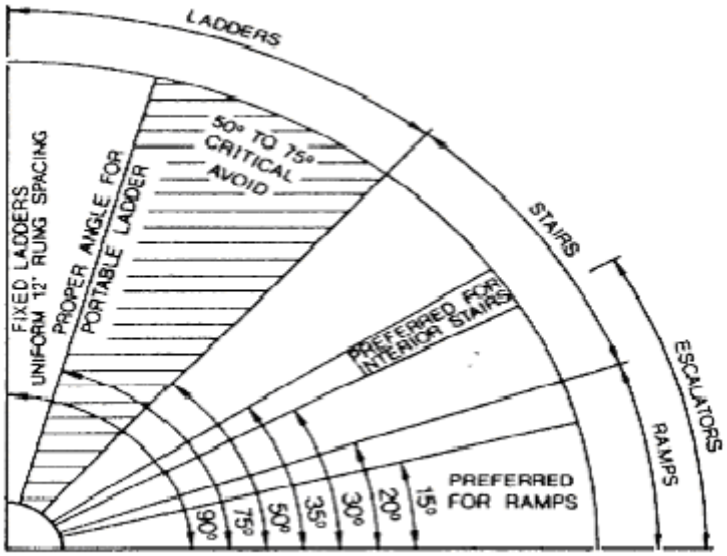

FIGURE J-12

SLOPE OF WOOD GRAIN FOR JOB MADE LADDERS

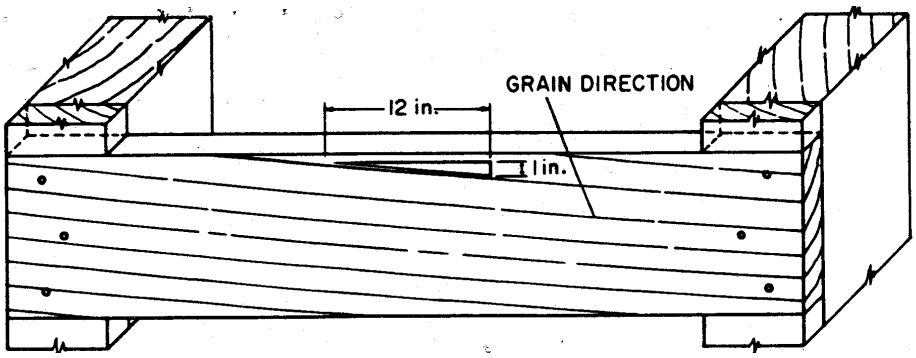

FIGURE J-13

EXAMPLE OF IMPERMISSIBLE KNOT SPACING

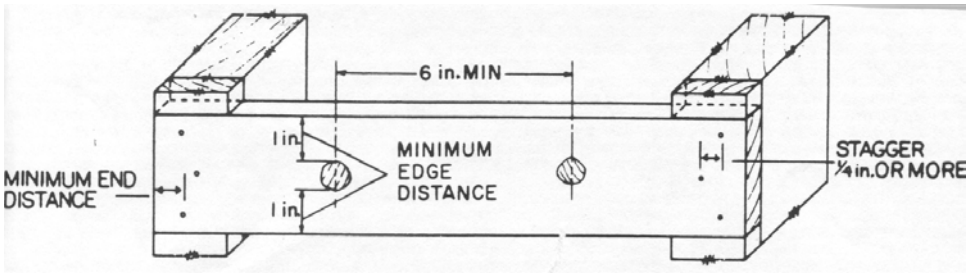

FIGURE J-14

EXAMPLE OF IMPERMISSIBLE KNOTS AT EDGE

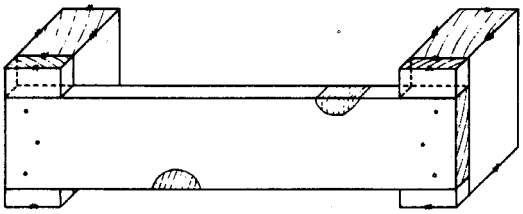

FIGURE J-15

EXAMPLE OF IMPERMISSIBLE SPIKE KNOTS

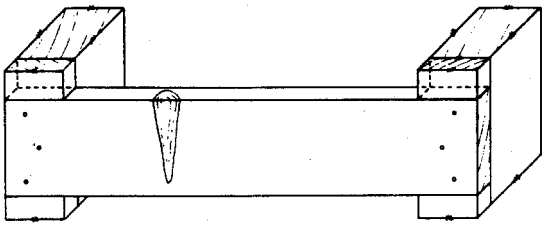

FIGURE J-16

CLEAT ATTACHMENT, SINGLE-CLEAT LADDER

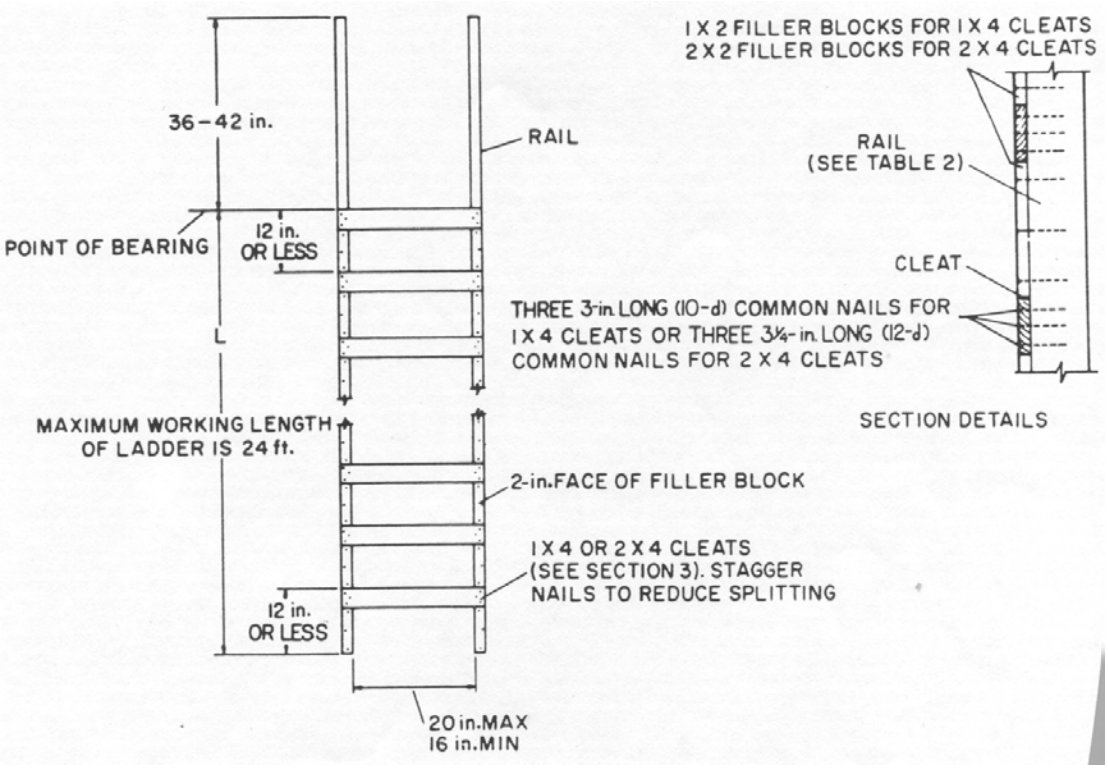

NOTES:
(1) All material shall comply with Section 21D.
(2) All lumber sizes are nominal.
(3) 1-1/2 in (3.8 cm) end distance shall be provided for top and bottom nails on filler blocks.

FIGURE J-17

CLEAT ATTACHMENT, DOUBLE-CLEAT LADDER

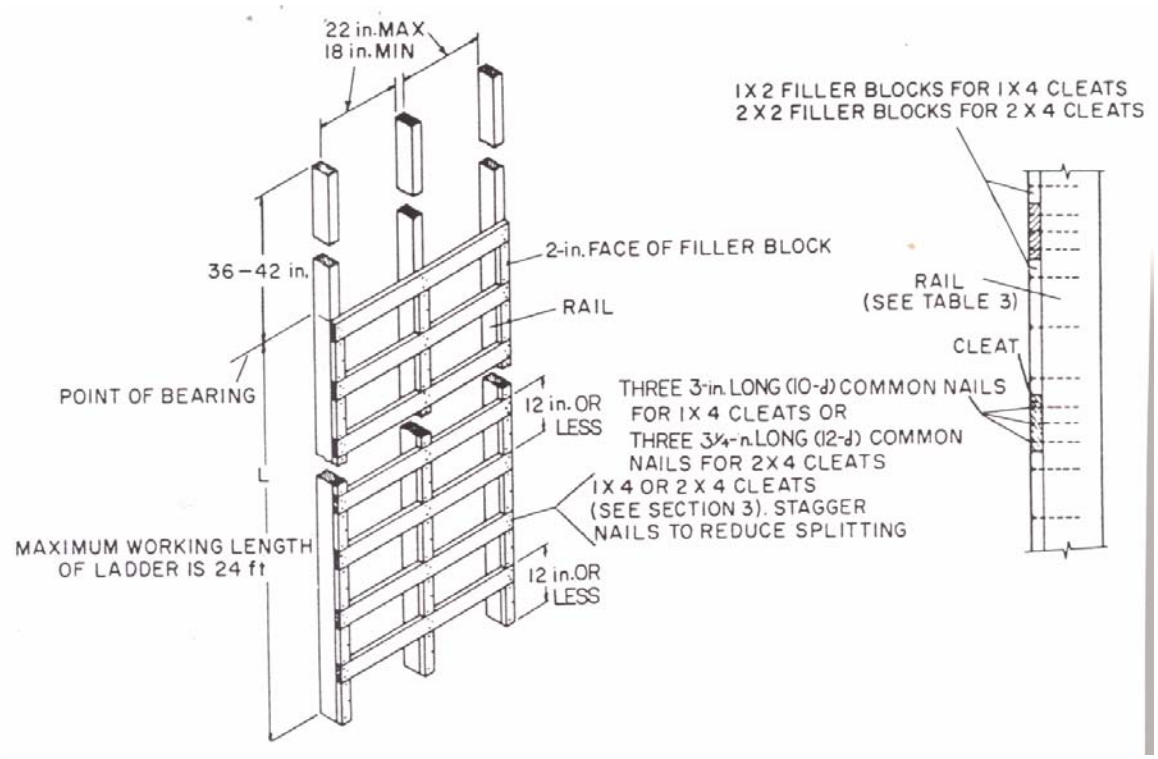

NOTES:
(1) All material shall comply with Section 21D.
(2) All lumber sizes are nominal.
(3) Cleats shall extend full width of ladder.
(4) 1-1/2 in (3.8 cm) end distance shall be provided for top and bottom nails on filler blocks.

FIGURE J-18

LADDER SPLICES - 2 X 4 RAIL

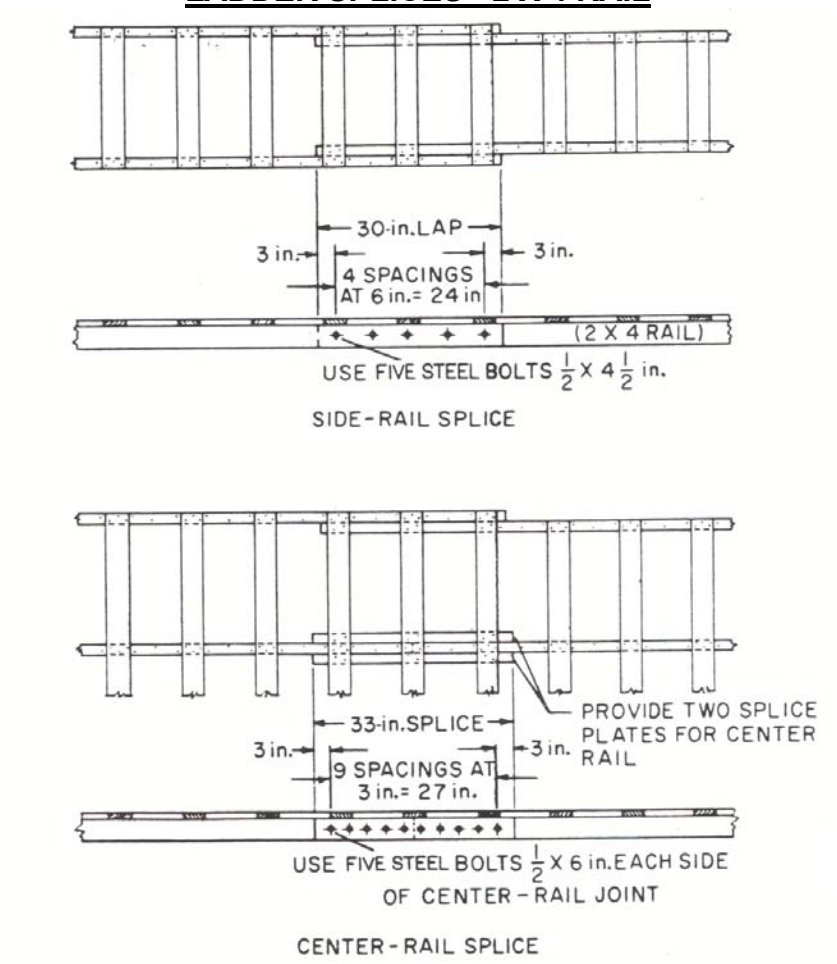

NOTES:
(1) The splice shall be located as near the top point of the bearing as possible
(2) Holes shall be drilled along the rail centerline, with bolt hole not to exceed bolt diameter by more than 1/32 in (.08 cm).
(3) Two 1 in (2.5 cm) diameter, 3/32 in (0.24 cm) thick steel washers and a lock washer shall be provided with each bolt.
(4) Ladders with splices shall not be used at a pitch flatter than 1 in 8.

FIGURE J-19

LADDER SPLICES - 2 X 6 RAIL

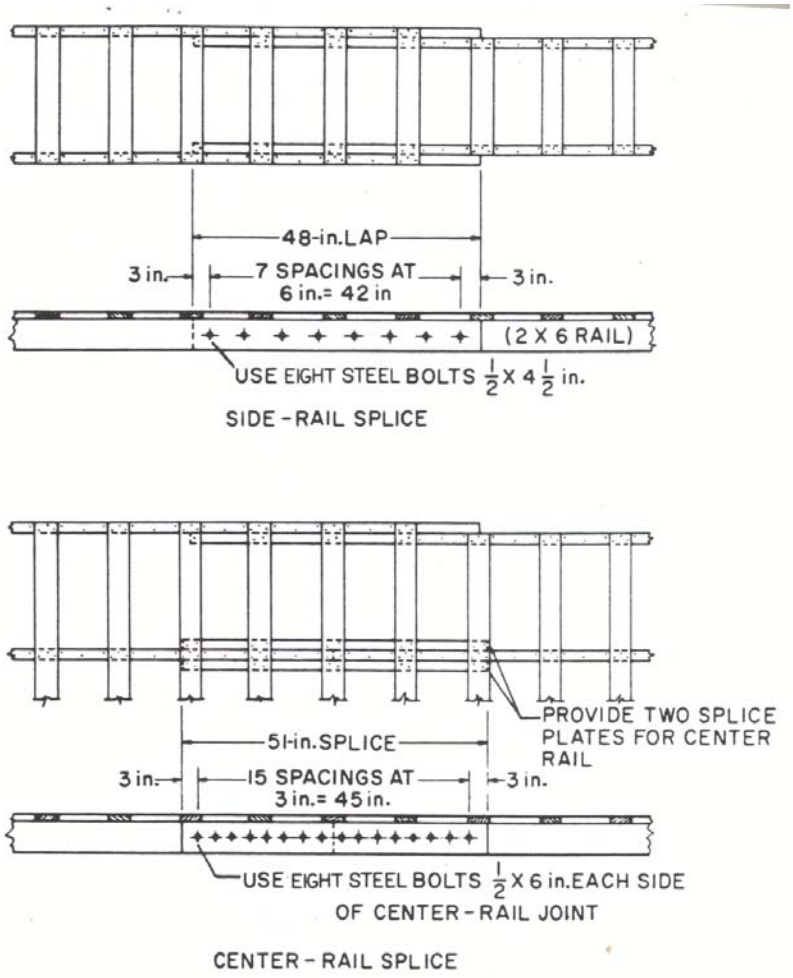

NOTES:

(1) The splices shall be located as near the top point of the bearing as possible.
(2) Holes shall be drilled along the rail centerline, with bolt hole not to exceed bolt diameter by more than 3/32 in (0.24 cm).
(3) Two 1 in (2.5 cm) diameter, 3/32 in (0.24 cm) thick steel washers and a lock washer shall be provided with each bolt.
(4) Ladders with splices shall not be used at a pitch flatter than 1 in 8.

FIGURE J-20

LADDER PITCH

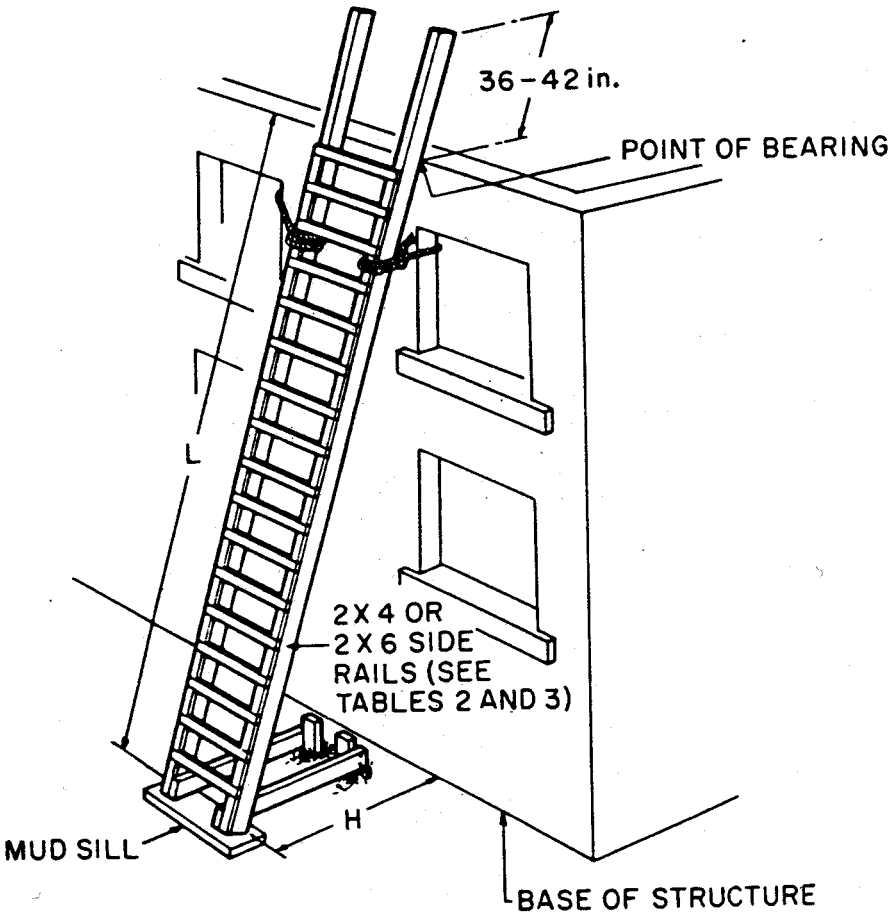

FIGURE J-21

METHODS FOR SECURING BASE

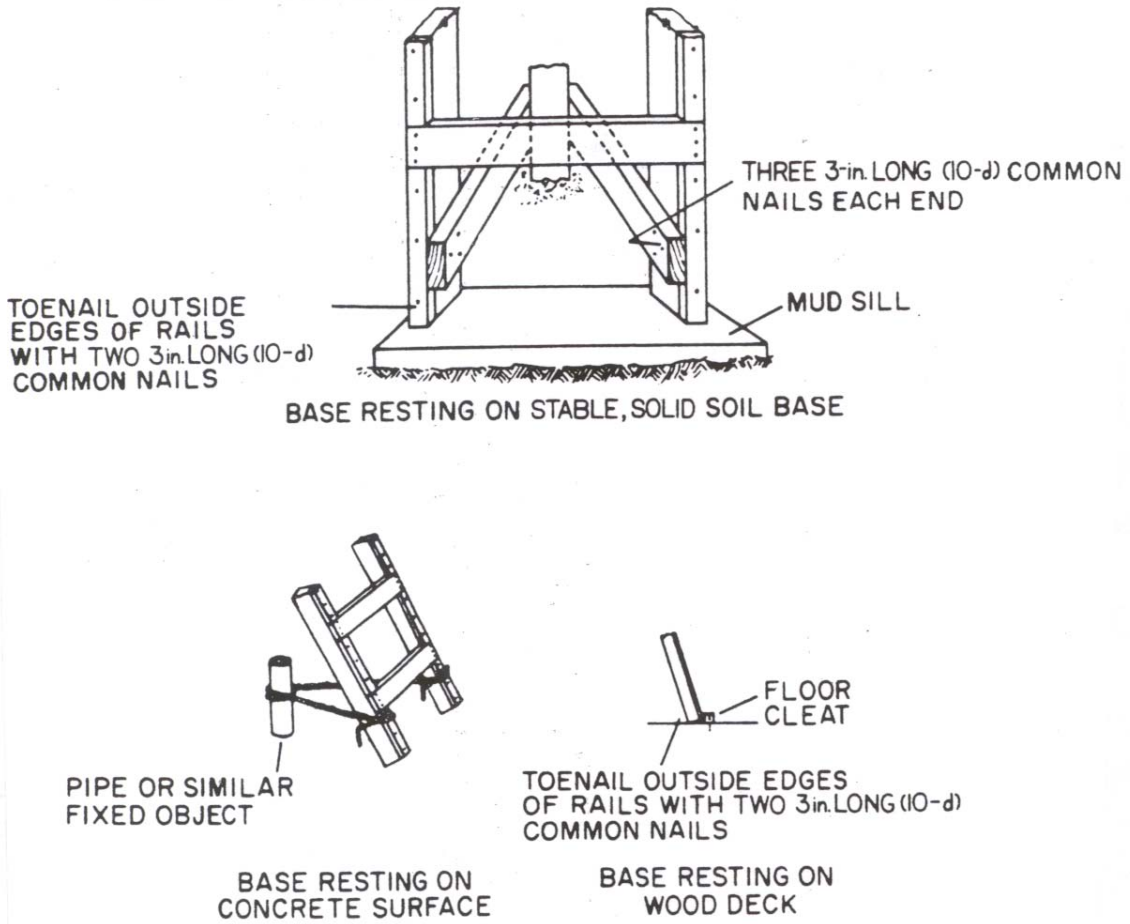

APPENDIX K

CRANES, DERRICKS, AND HOOKS

FIGURE K-1

MOBILE AND LOCOMOTIVE CRANES

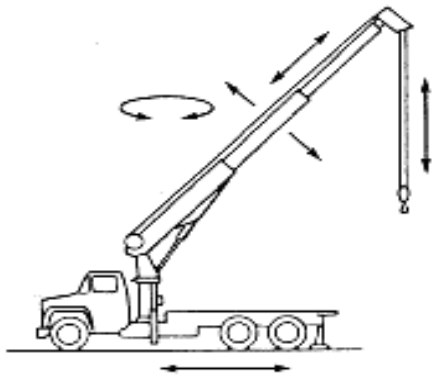

GENERAL NOTE: The boom may have a base boom structure of sections (upper and lower) between or beyond which additional sections may be added to increase its length, or it may consist of a base boom from which one or more boom extensions are telescoped for additional length.

COMMERCIAL TRUCK-MOUNTED CRANE — TELESCOPING BOOM

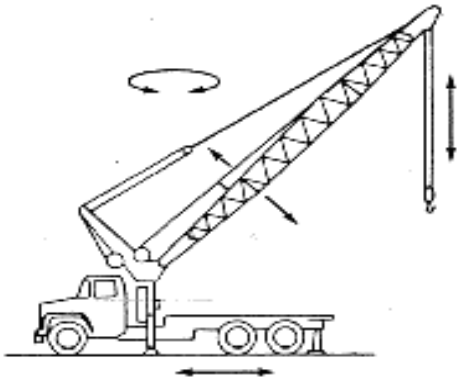

GENERAL NOTE: The boom may have a base boom structure of sections (upper and lower) between or beyond which additional sections may be added to increase its length, or it may consist of a base boom from which one or more boom extensions are telescoped for additional length.

COMMERCIAL TRUCK-MOUNTED CRANE — NONTELESCOPING BOOM

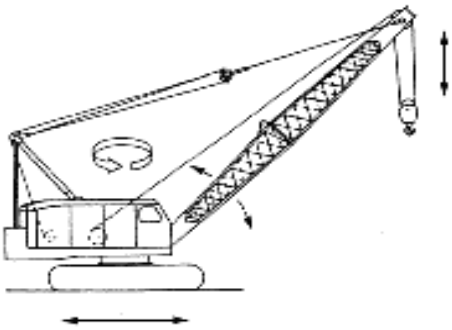

CRAWLER CRANE

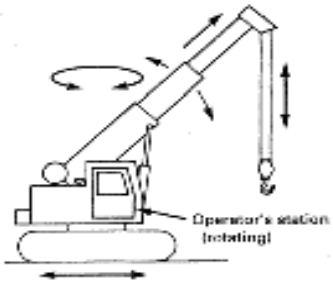

GENERAL NOTE: The boom may have a base boom structure of sections (upper and lower) between or beyond which additional sections may be added to increase its length, or it may consist of a base boom from which one or more boom extensions are telescoped for additional length.

CRAWLER CRANE — TELESCOPING BOOM

FIGURE K-1 (CONTINUED)

MOBILE AND LOCOMOTIVE CRANES

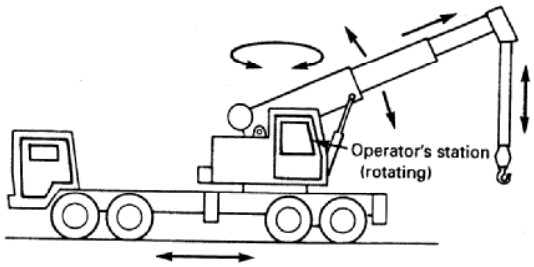

GENERAL NOTE: The boom may have a base boom structure of sections (upper and lower) between or beyond which additional sections may be added to increase its length, or it may consist of a base boom from which one or more boom extensions are telescoped for additional length.

WHEEL-MOUNTED CRANE — TELESCOPING BOOM (MULTIPLE CONTROL STATION)

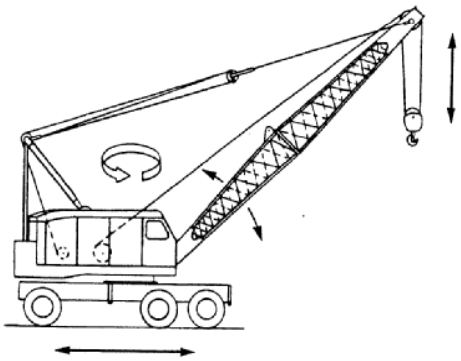

WHEEL-MOUNTED CRANE (SINGLE CONTROL STATION)

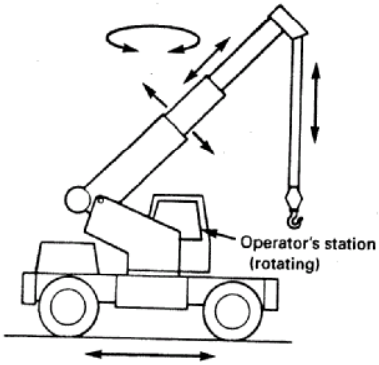

GENERAL NOTE: The boom may have a base boom structure of sections (upper and lower) between or beyond which additional sections may be added to increase its length, or it may consist of a base boom from which one or more boom extensions are telescoped for additional length.

WHEEL-MOUNTED CRANE — TELESCOPING BOOM (SINGLE CONTROL STATION)

FIGURE K-1 (CONTINUED)

MOBILE AND LOCOMOTIVE CRANES

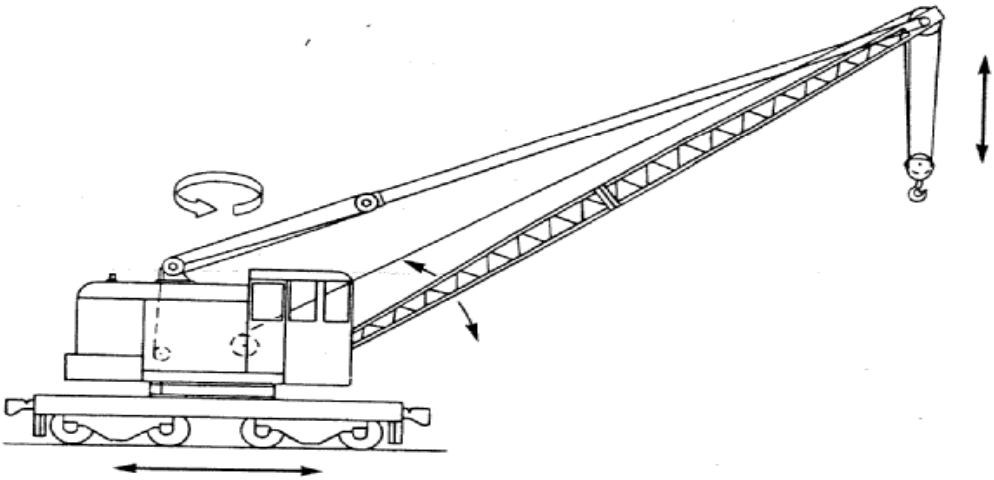

LOCOMOTIVE CRANE

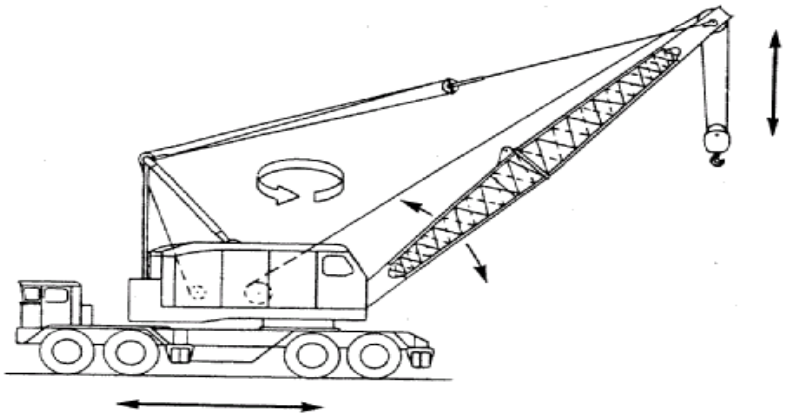

WHEEL-MOUNTED CRANE (MULTIPLE CONTROL STATION)

FIGURE K-1 (CONTINUED)

MOBILE AND LOCOMOTIVE CRANES

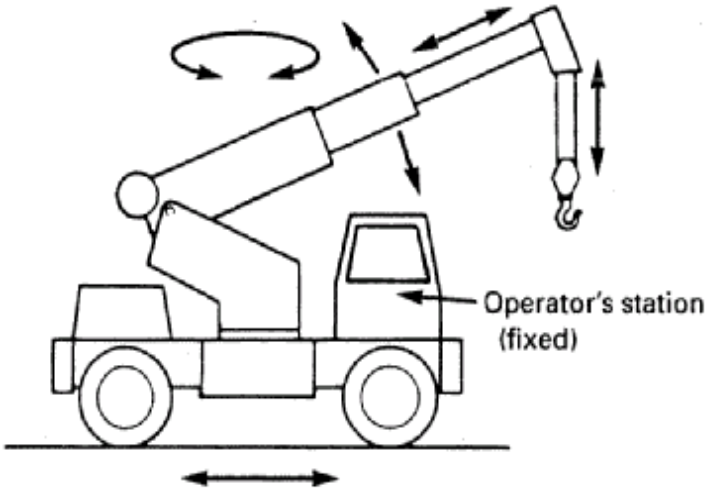

GENERAL NOTE: The boom may have a base boom structure of sections (upper and lower) between or beyond which additional sections may be added to increase its length, or it may consist of a base boom from which one or more boom extensions are telescoped for additional length.

**WHEEL-MOUNTED CRANE —
TELESCOPING BOOM (SINGLE CONTROL STATION)**

FIGURE K-1 (CONTINUED)

MOBILE AND LOCOMOTIVE CRANES

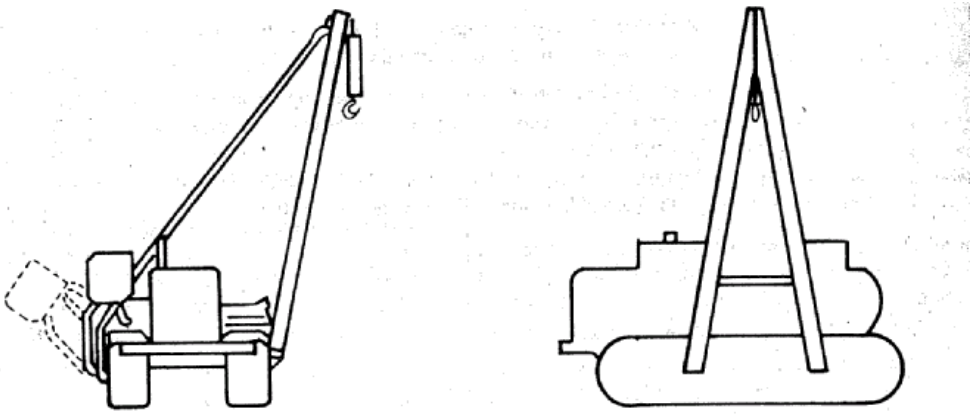

TRACK-TYPE TRACTOR SIDE BOOM

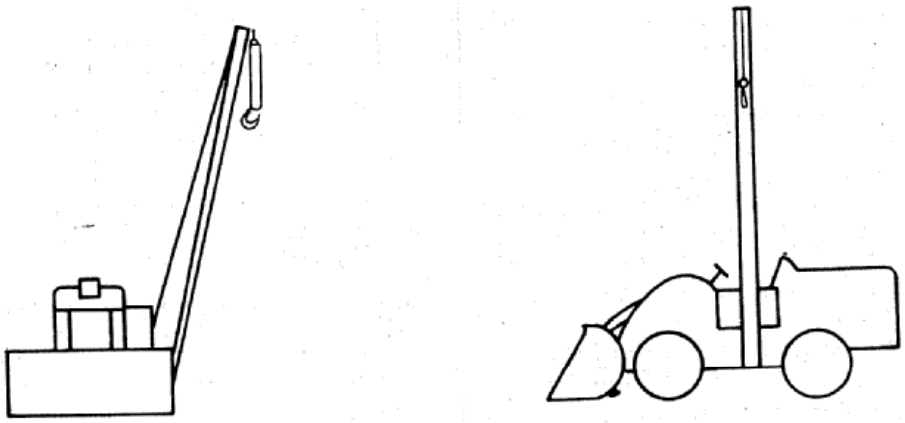

WHEEL-TYPE TRACTOR SIDE BOOM

FIGURE K-1 (CONTINUED)

MOBILE AND LOCOMOTIVE CRANES

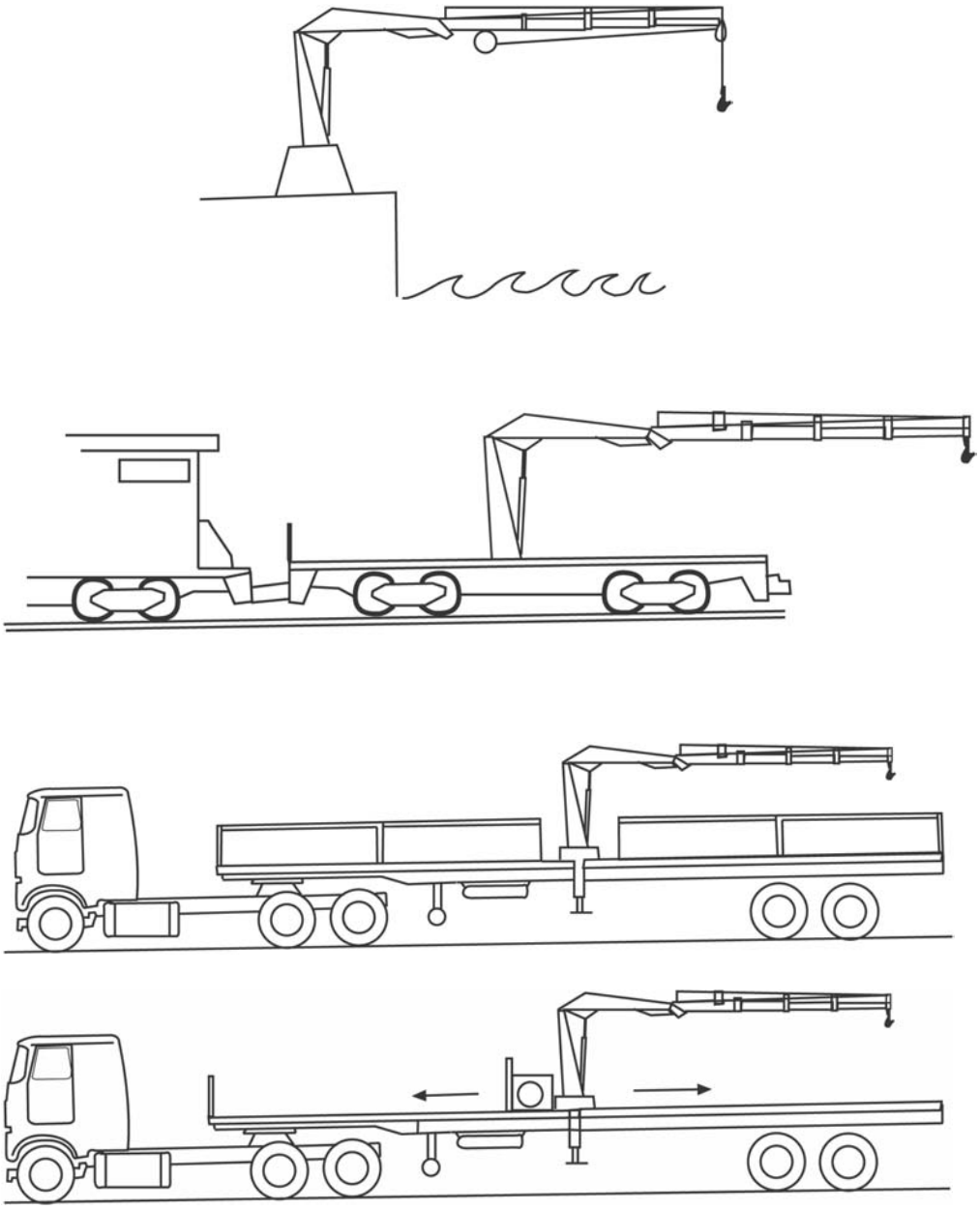

FIGURE K-1 (CONTINUED)

MOBILE AND LOCOMOTIVE CRANES

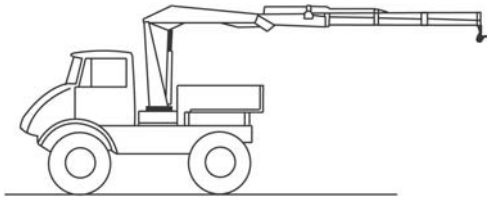

OFF-ROAD VEHICLE

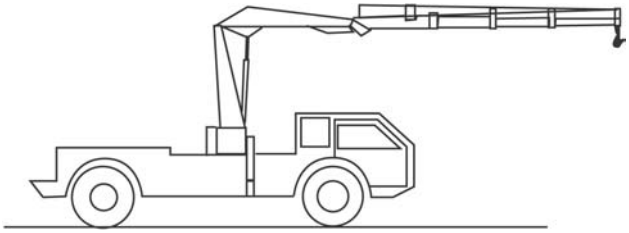

WHEEL-MOUNTED OFF-ROAD DUAL CONTROL STATION

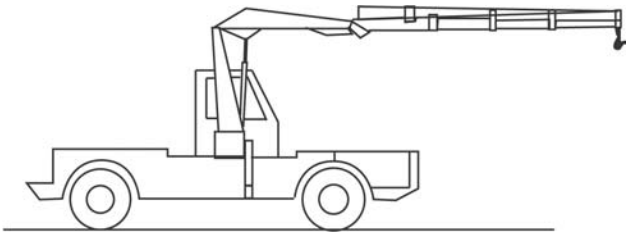

WHEEL-MOUNTED OFF-ROAD SINGLE CONTROL STATION

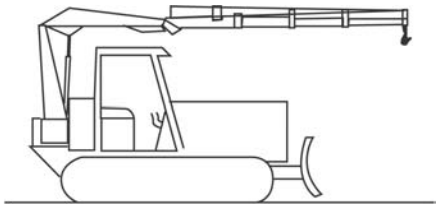

CRAWLER-MOUNTED OFF-ROAD SINGLE CONTROL STATION

FIGURE K-2

CONSTRUCTION TOWER CRANES

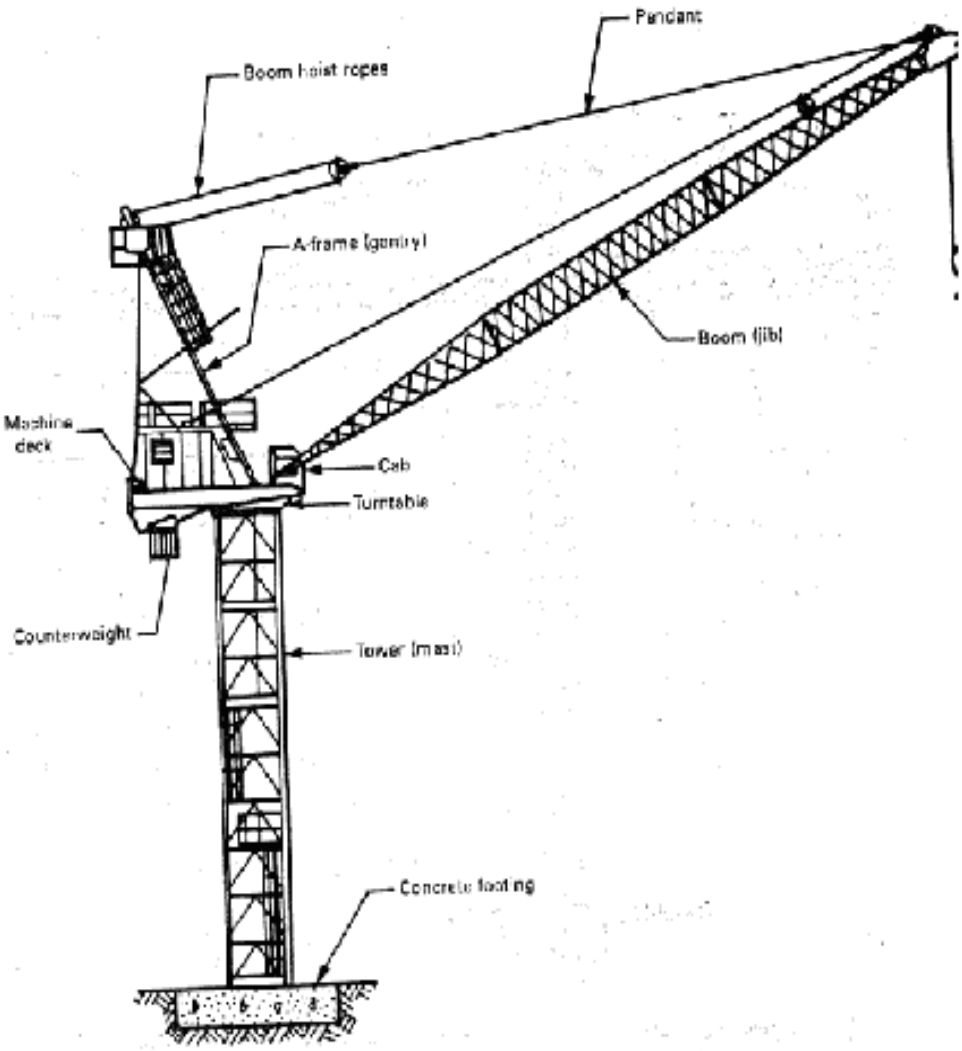

LUFFING TOWER CRANE — STATIC BASE, FREE STANDING CRANE

FIGURE K-2 (CONTINUED)

CONSTRUCTION TOWER CRANES

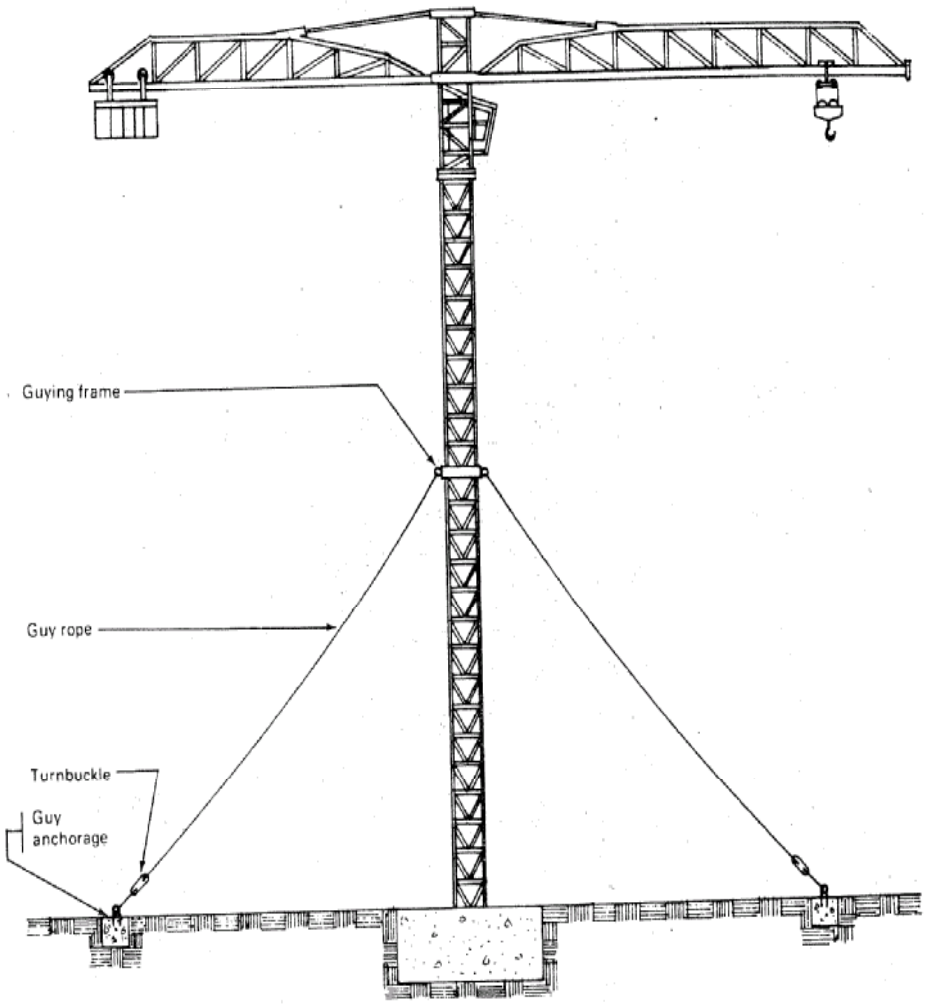

GENERAL NOTE: Three or more guys to be provided, symmetrically arranged.

GUYED TOWER CRANE

FIGURE K-2 (CONTINUED)

TOWER CRANES

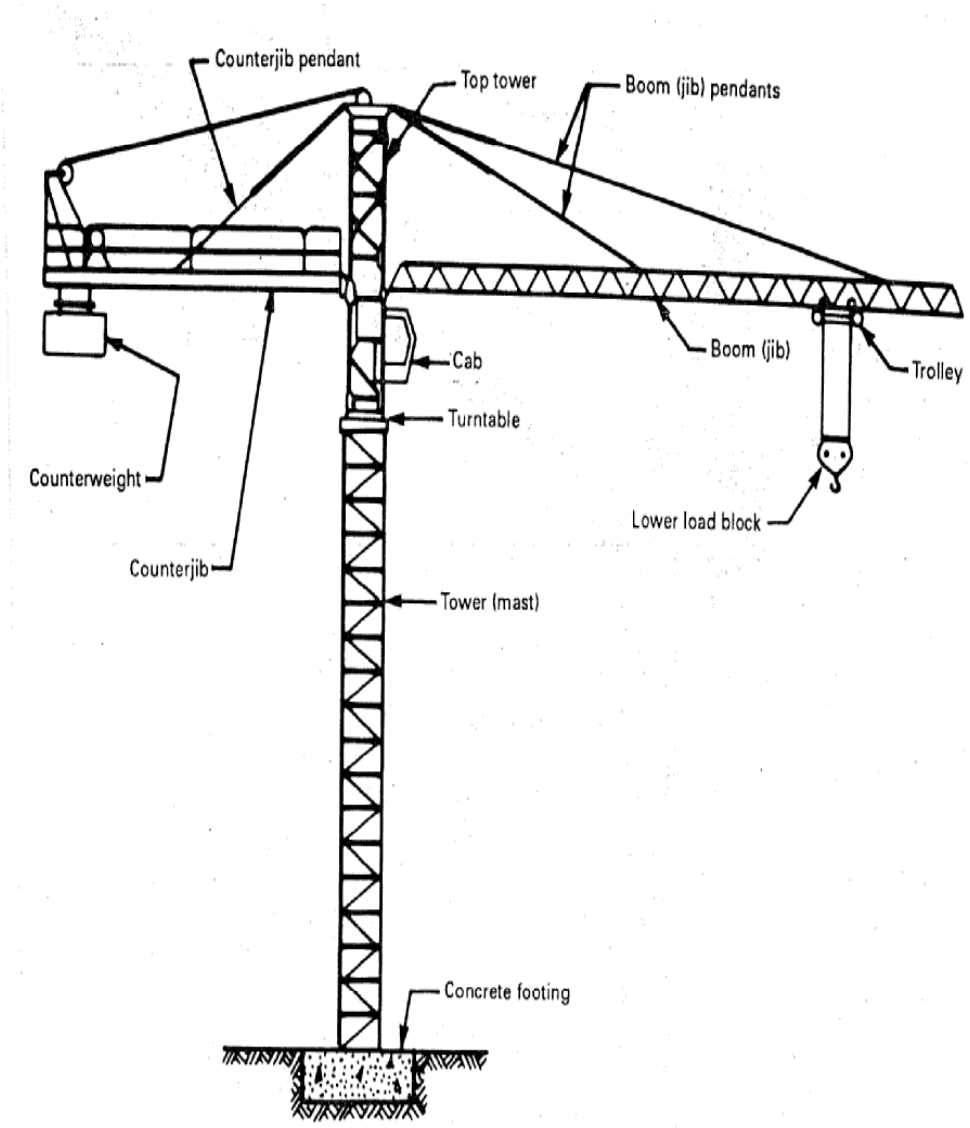

HAMMERHEAD TOWER CRANE — STATIC BASE, FREE STANDING CRANE

FIGURE K-3

OVERHEAD AND GANTRY CRANES

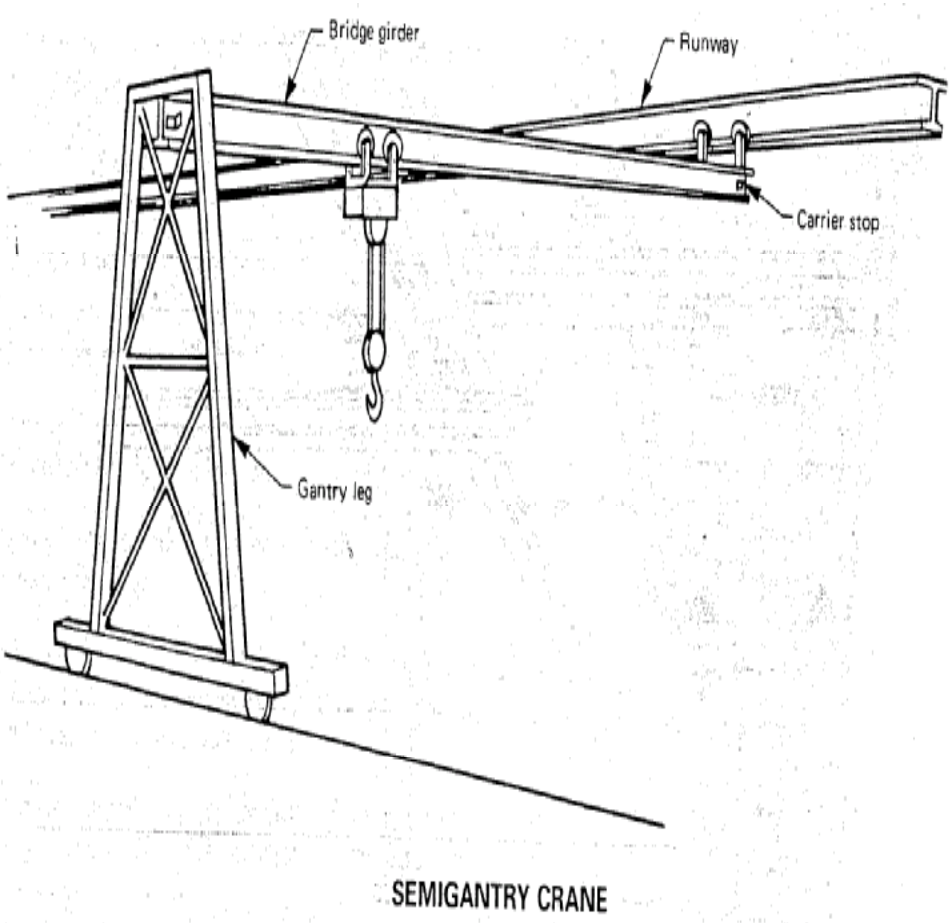

FIGURE K-3 (CONTINUED)

OVERHEAD AND GANTRY CRANES

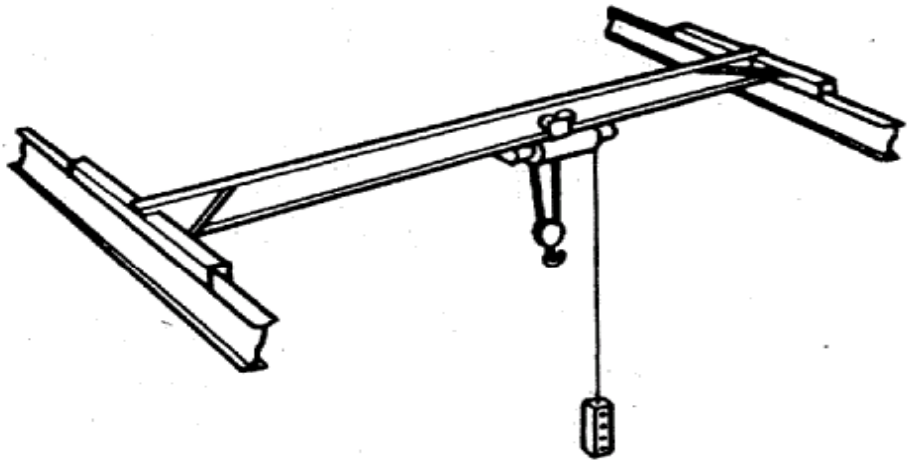

OVERHEAD FLOOR-OPERATED CRANE

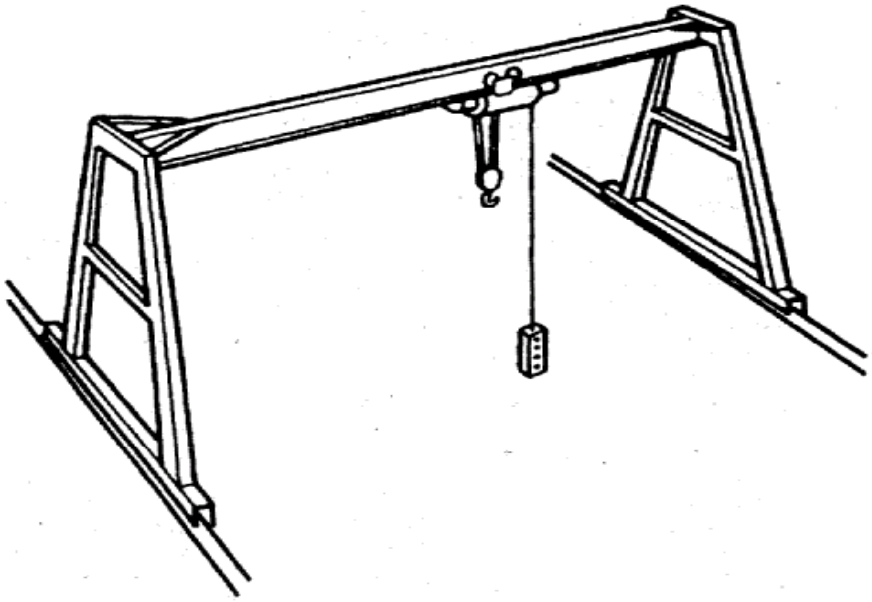

GANTRY CRANE

FIGURE K-3 (CONTINUED)

OVERHEAD AND GANTRY CRANES

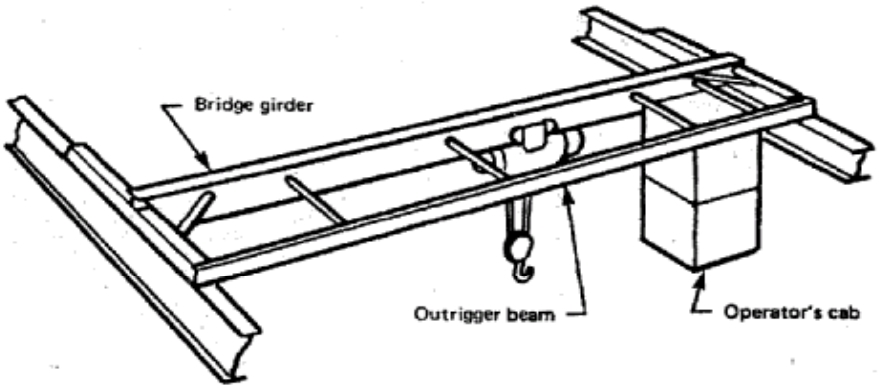

OVERHEAD CAB-OPERATED CRANE

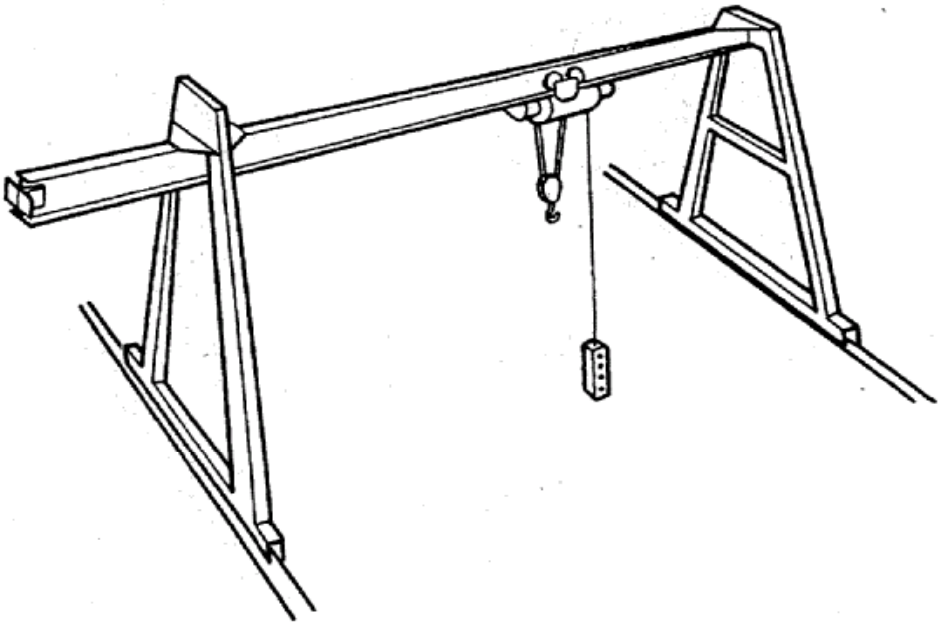

CANTILEVER GANTRY CRANE

FIGURE K-4

CAB-OPERATED CRANES

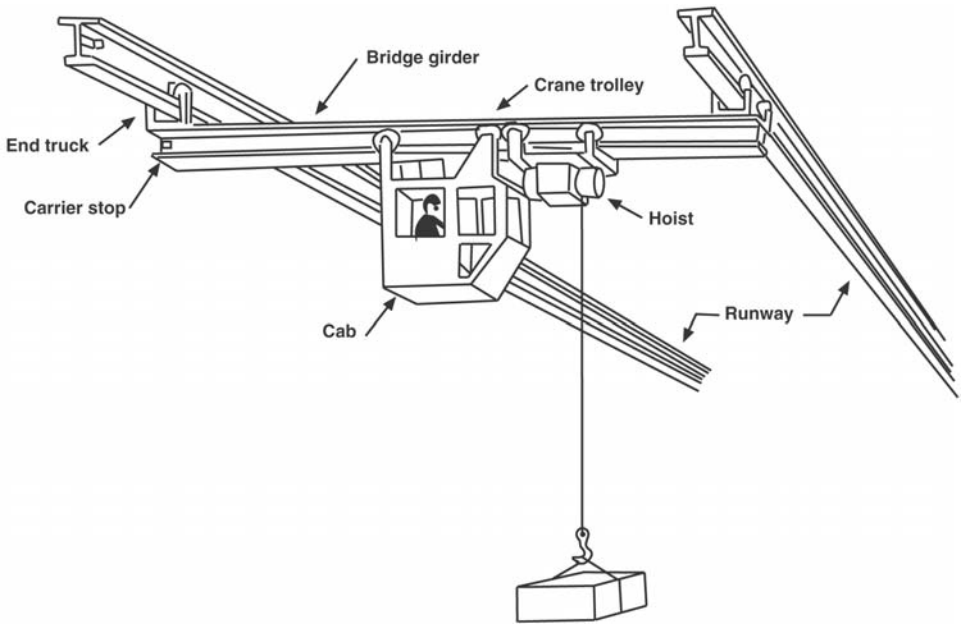

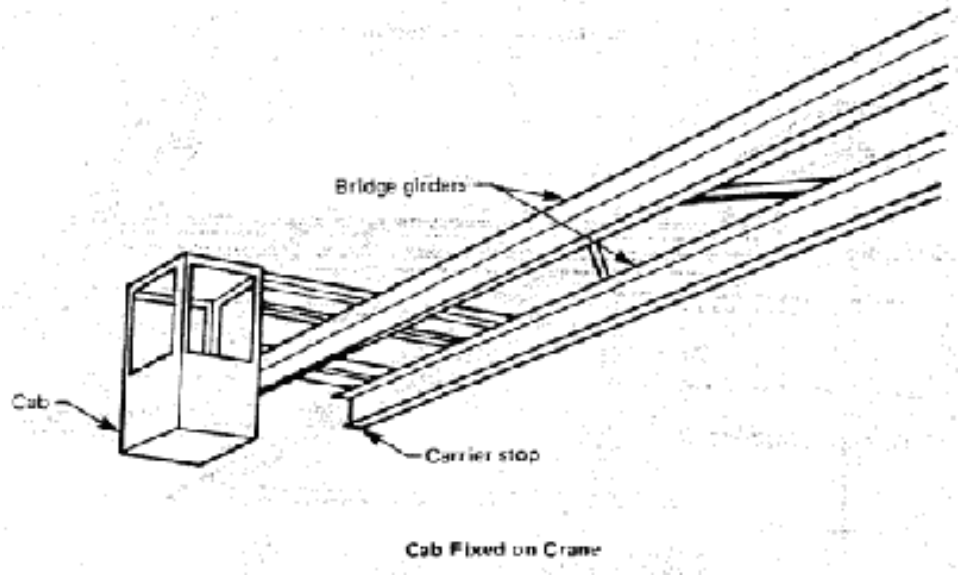

FIGURE K-5

FLOOR-OPERATED CRANES

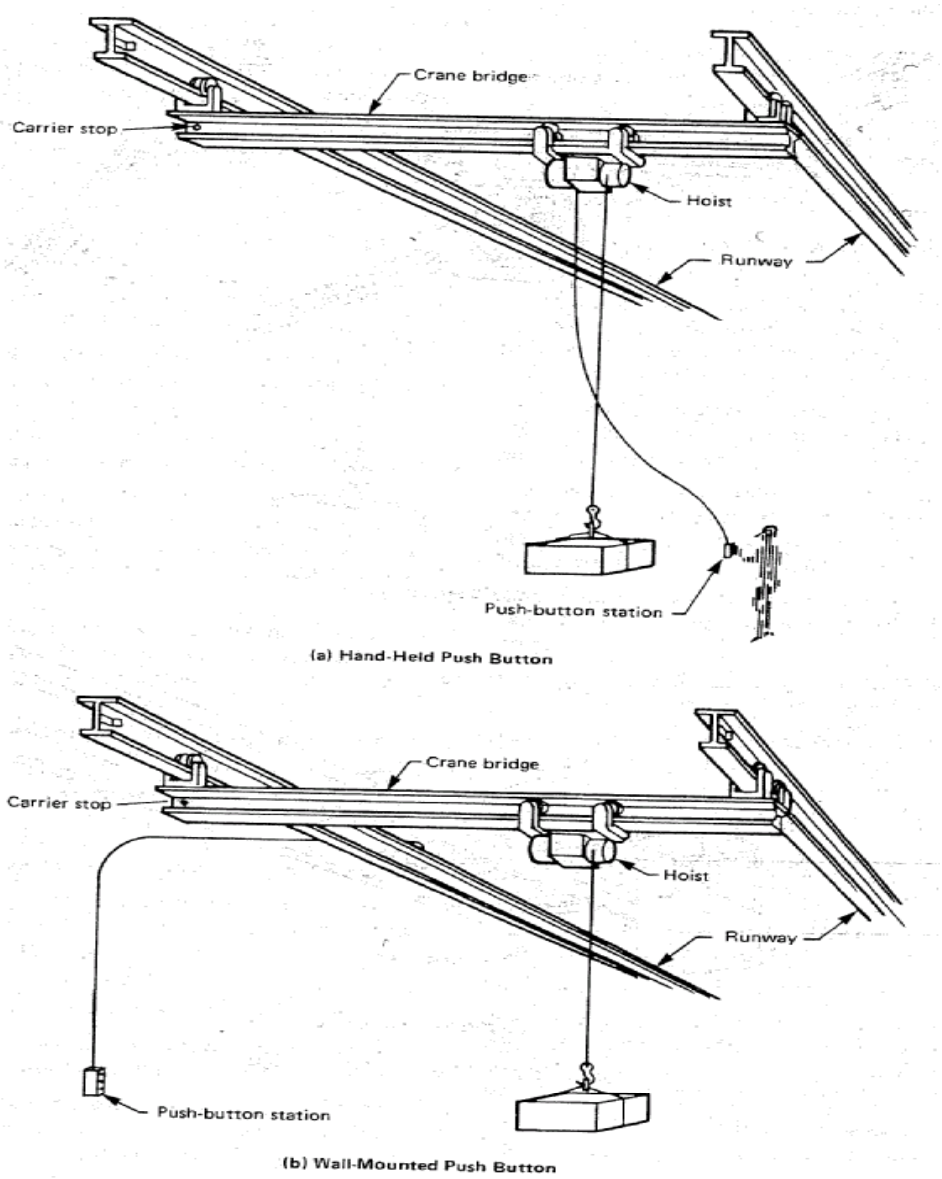

FLOOR-OPERATED CRANES

FIGURE K-6

FLOATING CRANES

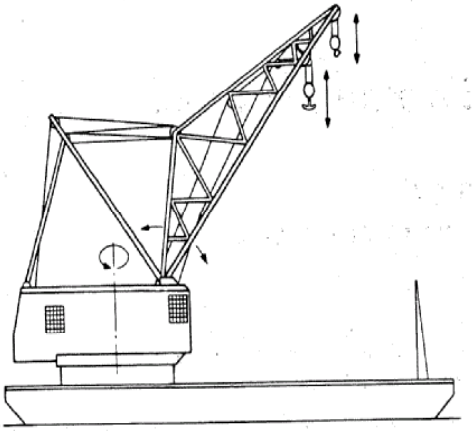

FLOATING CRANE

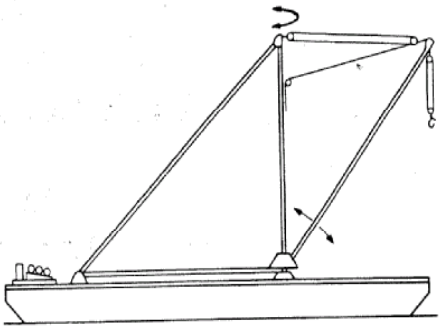

FLOATING STIFFLEG DERRICK

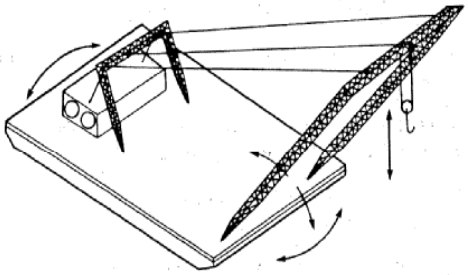

BARGE-MOUNTED SHEARLEG

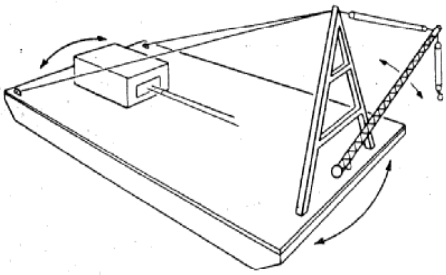

FLOATING A-FRAME DERRICK

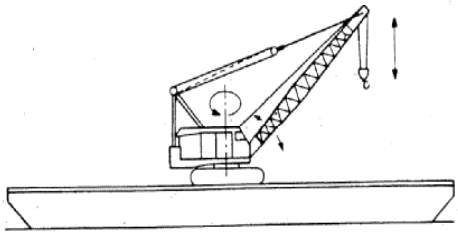

BARGE-MOUNTED LAND CRANE

FIGURE K-6 (CONTINUED)

FLOATING CRANES

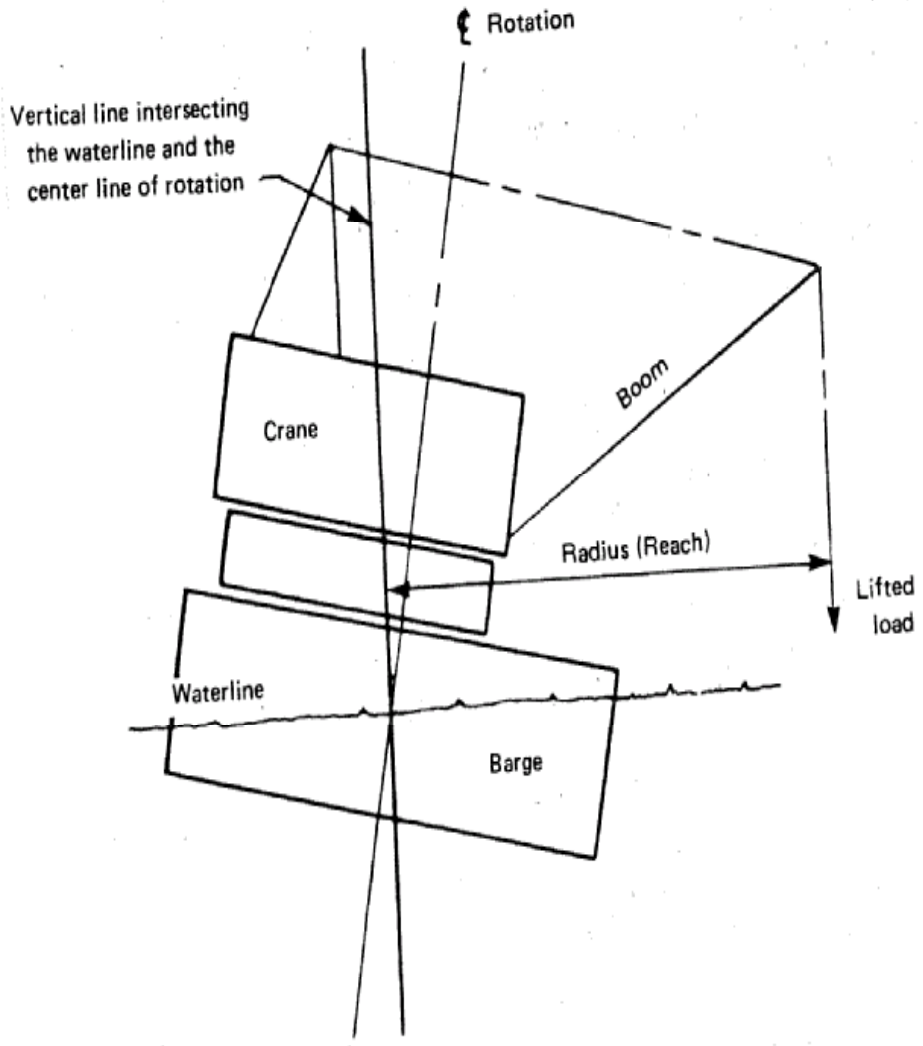

REACH FOR FLOATING CRANES

FIGURE K-7

DERRICKS

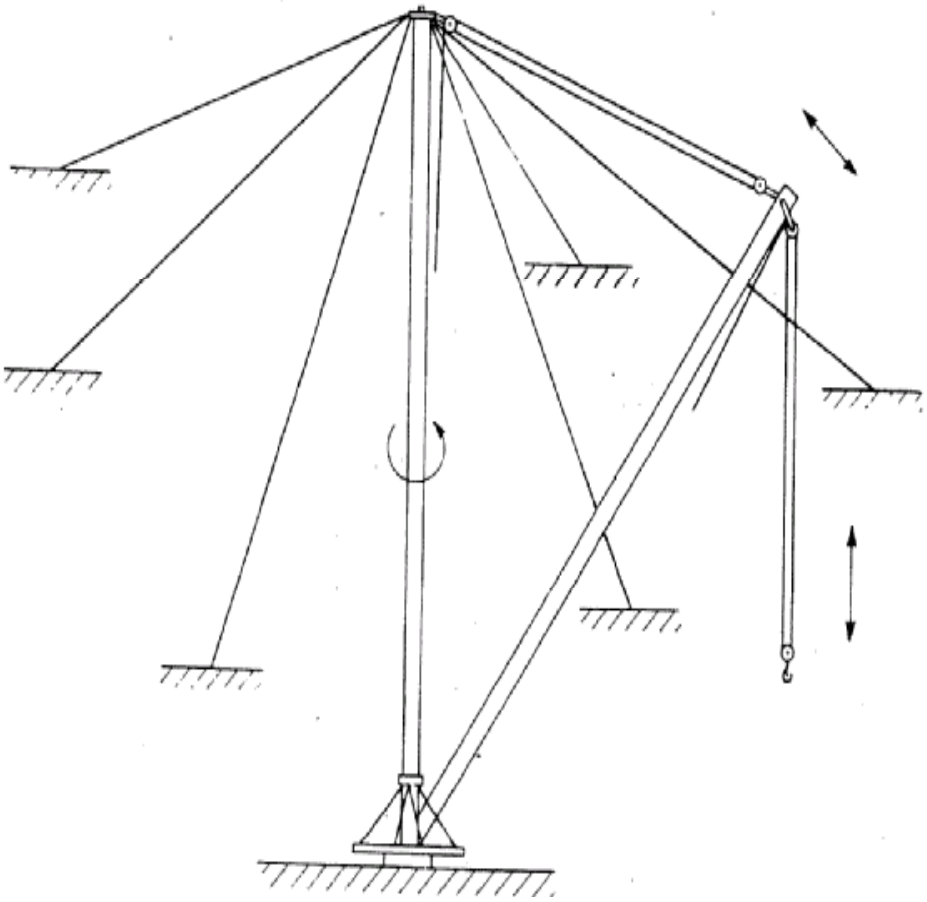

GUY DERRICK

FIGURE K-7 (CONTINUED)

DERRICKS

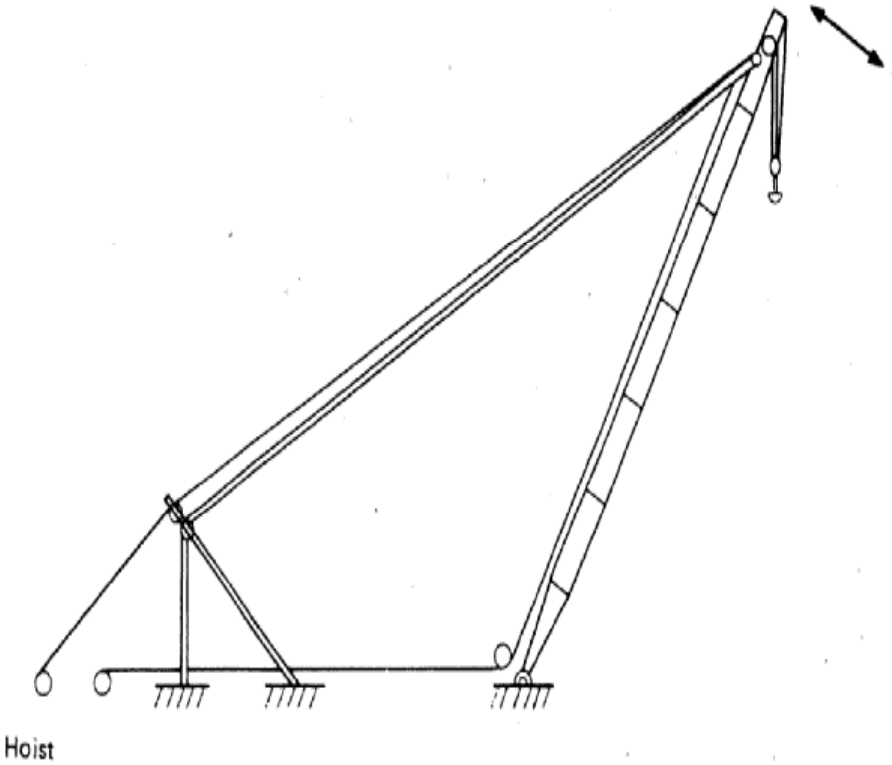

SHEARLEG DERRICK

FIGURE K-7 (CONTINUED)

DERRICKS

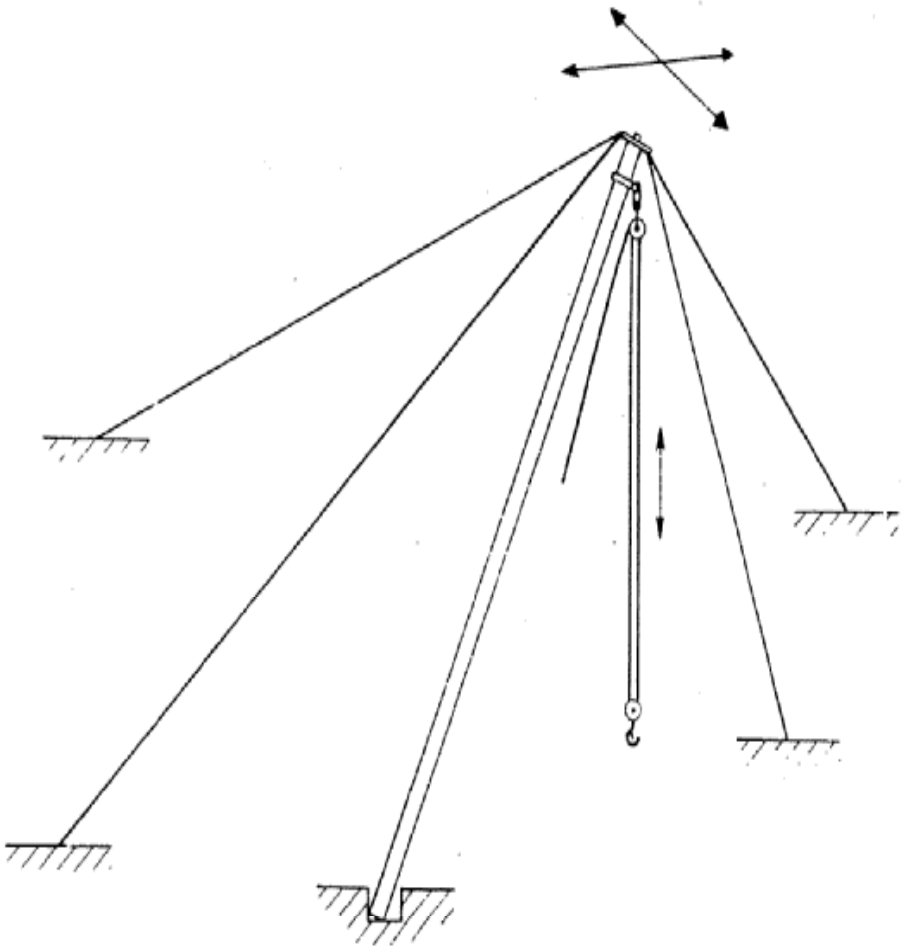

GIN POLE DERRICK

FIGURE K-7 (CONTINUED)

DERRICKS

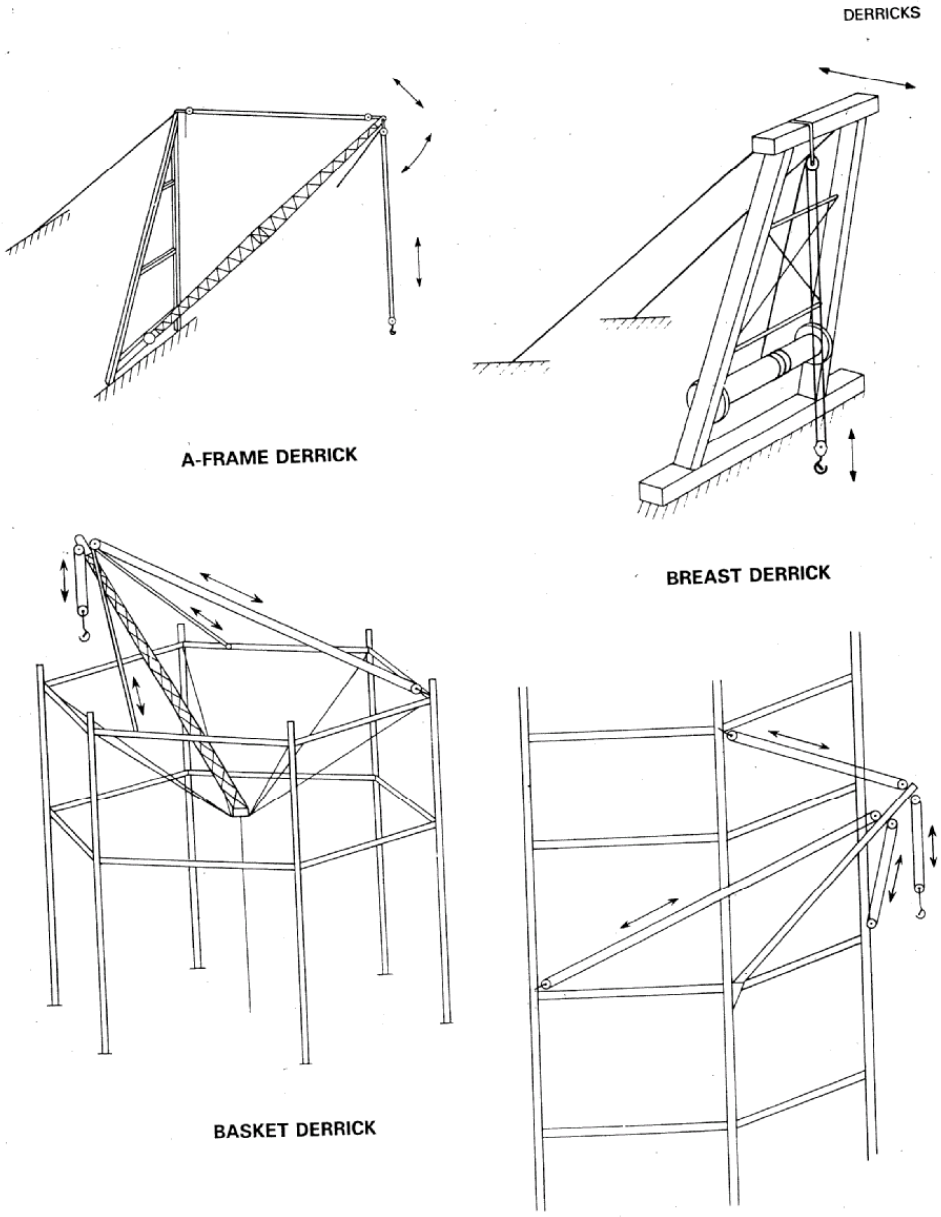

FIGURE K-8

DROP SECTION (LIFT SECTION)

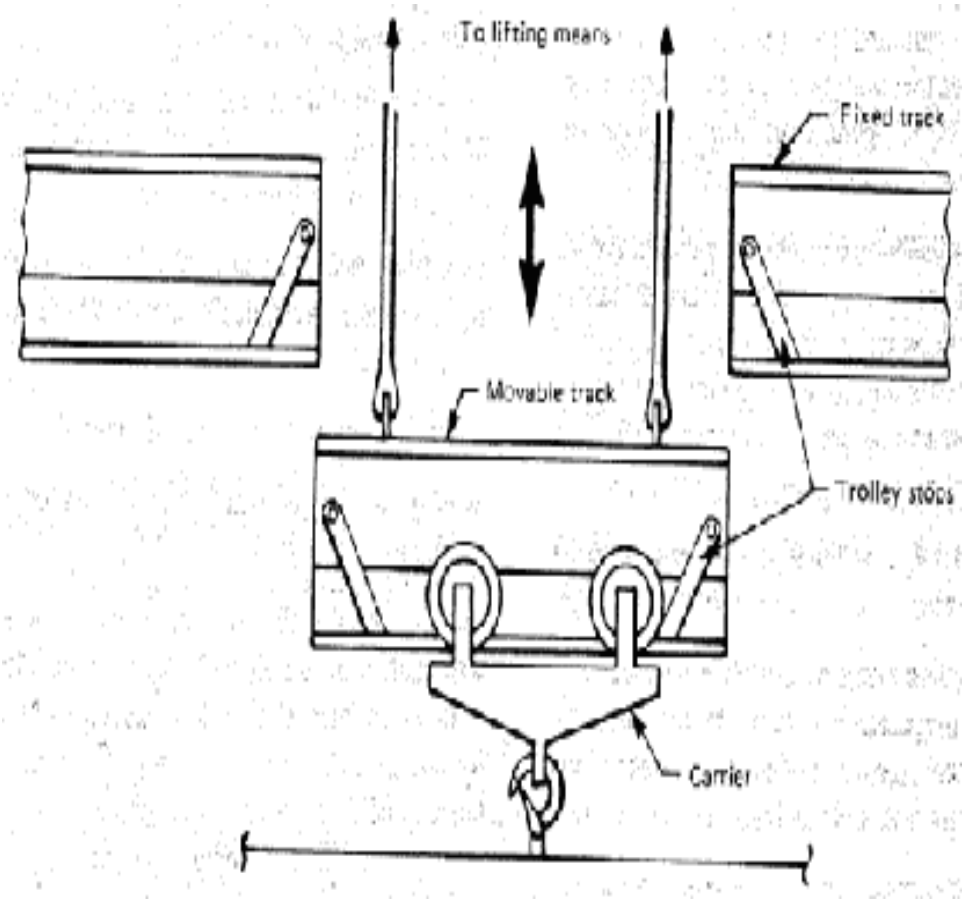

FIGURE K-9

HOOKS

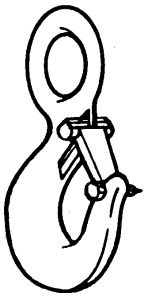

SELF-CLOSING TIPLOCK LATCH (EYE HOOK)

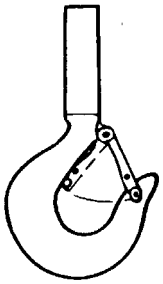

SELF-CLOSING TIPLOCK LATCH (SHANK HOOK)

SELF-CLOSING BAIL (EYE HOOK)

SELF-CLOSING FLAPPER LATCH (SWIVEL HOOK)

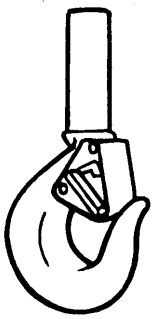

SELF-CLOSING FLAPPER LATCH (SHANK HOOK)

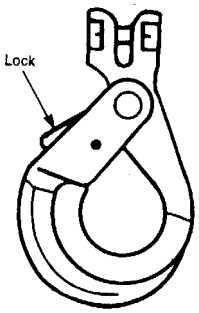

SELF-LOCKING CLEVIS HOOK (CLOSED)

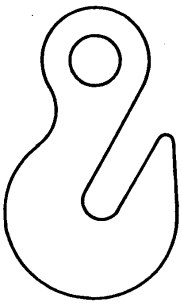

EYE GRAB HOOK

APPENDIX L

SCAFFOLDS, WORK STANDS, AND PLATFORMS

FIGURE L-1

SCAFFOLDS

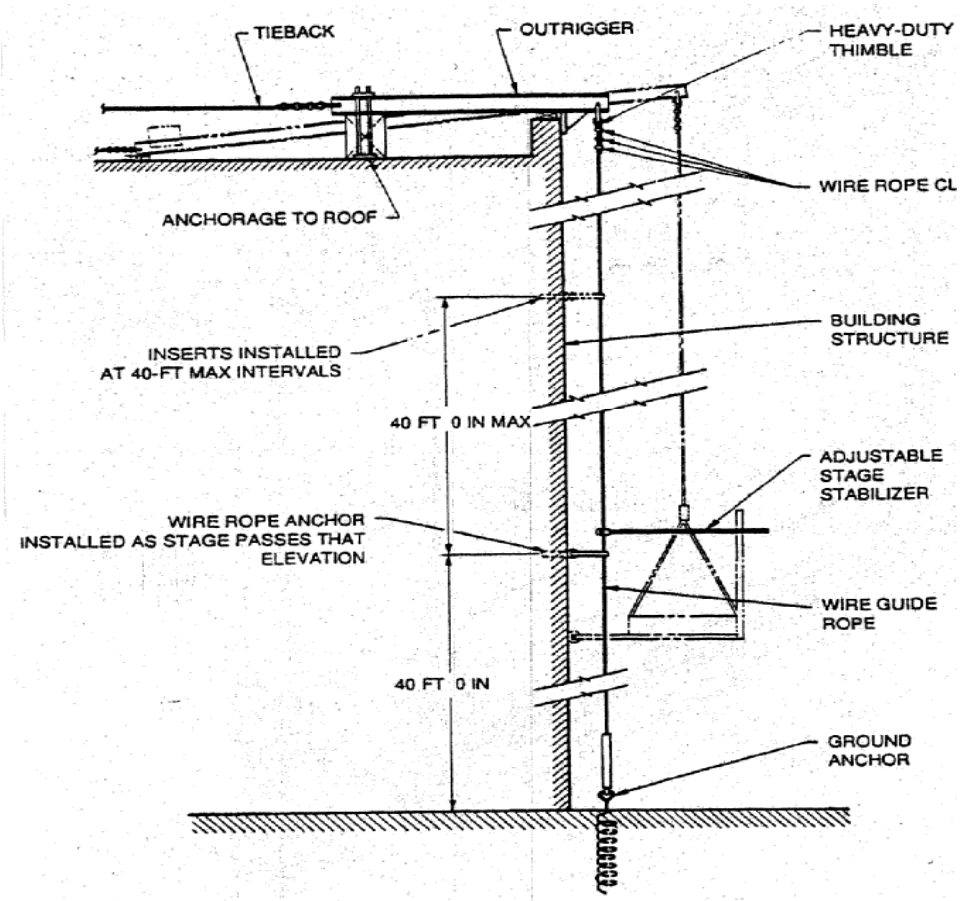

Two-Point Suspension Scaffold
Ground-Rigged Sway Control

FIGURE L-1 (CONTINUED)

SCAFFOLDS

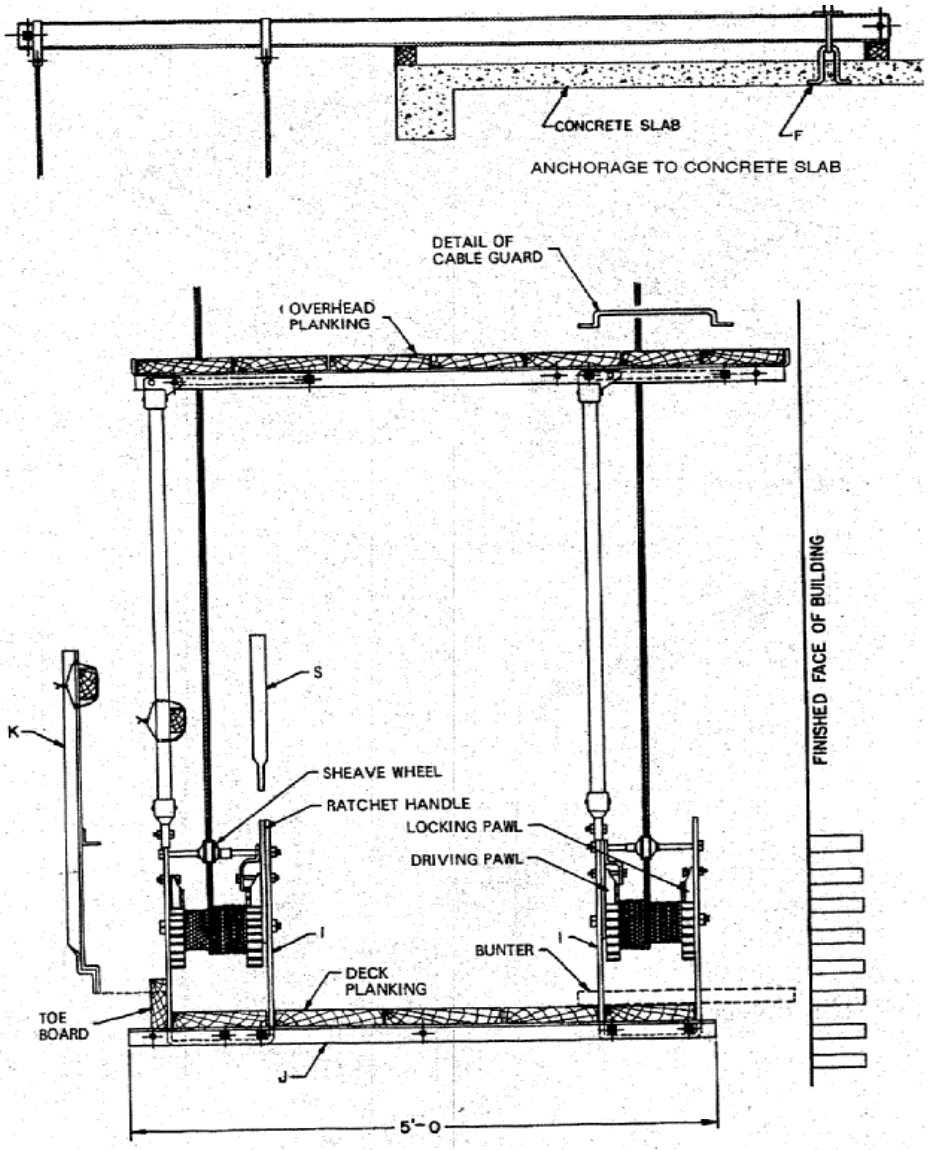

Masons' Adjustable Multiple-Point Suspension Scaffold

FIGURE L-1 (CONTINUED)

SCAFFOLDS

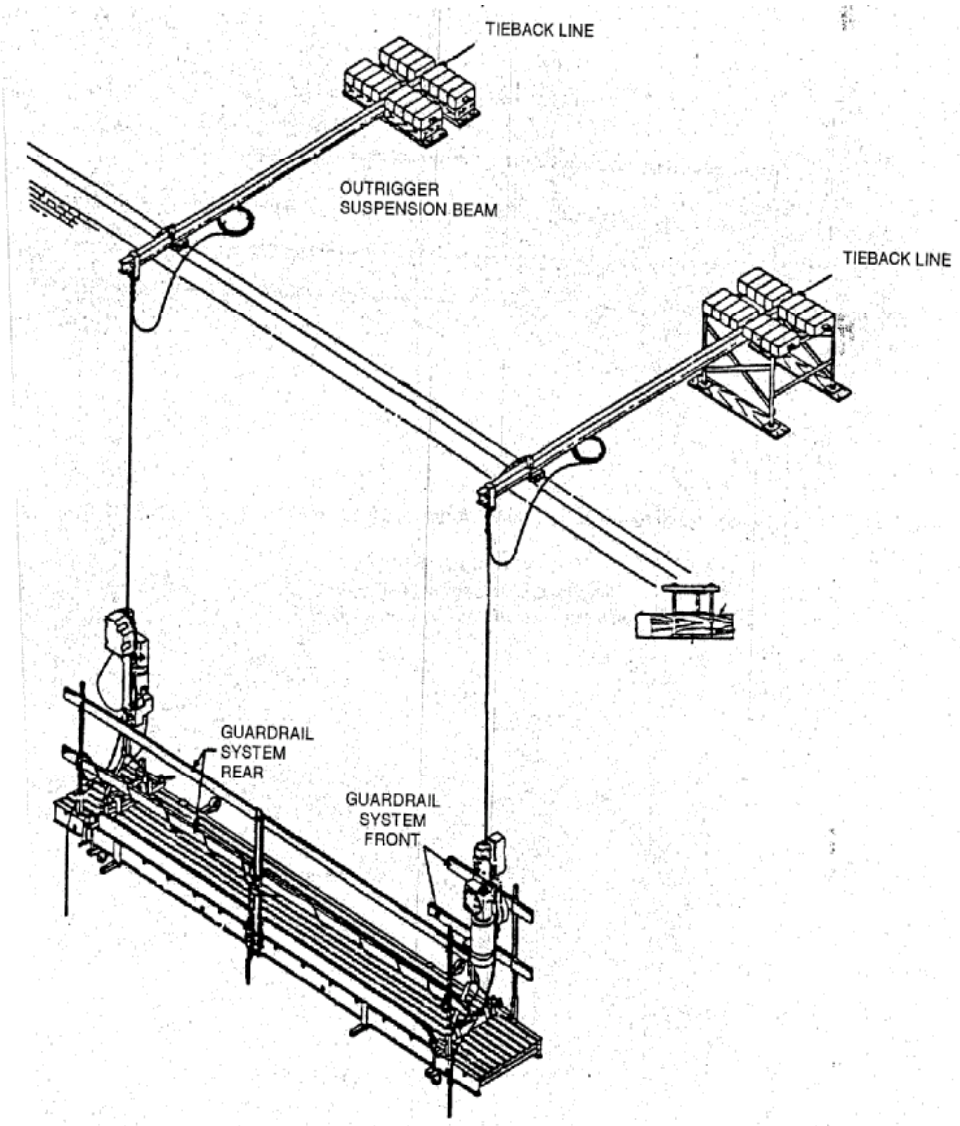

Two-Point Suspension Scaffold
with Powered Traction Hoists

FIGURE L-1 (CONTINUED)

SCAFFOLDS

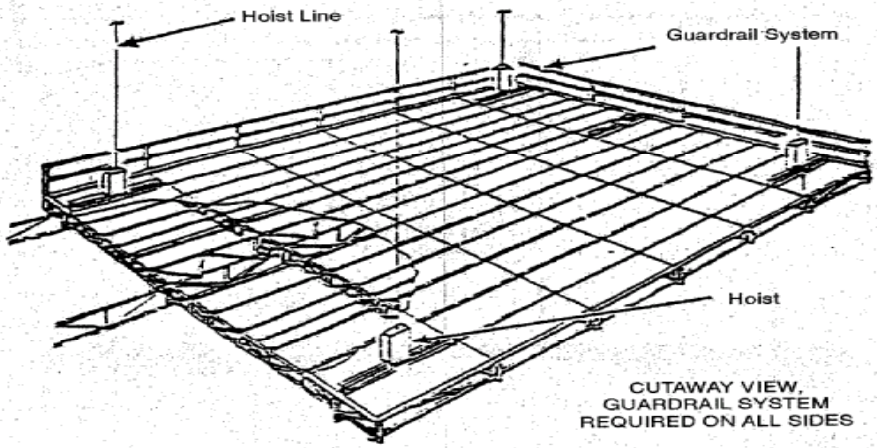

Multiple-Point Suspenion Scaffold

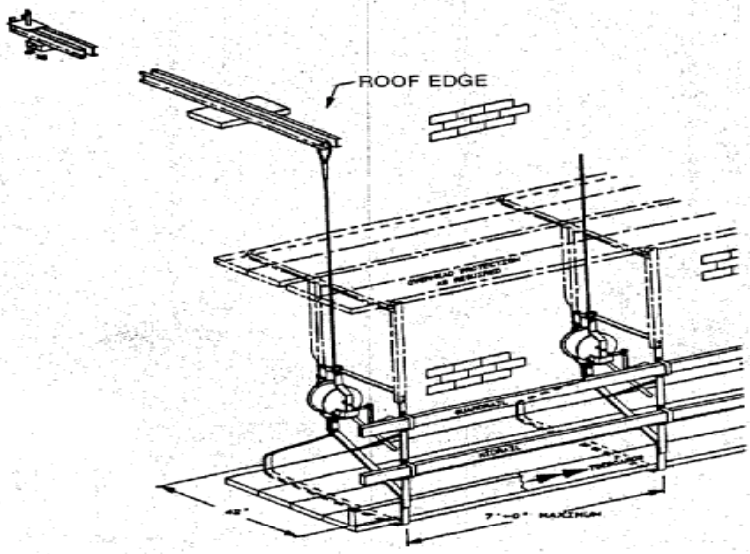

Light-Duty Masons' Adjustable Multiple-Point Suspension Scaffold

FIGURE L-1 (CONTINUED)

SCAFFOLDS

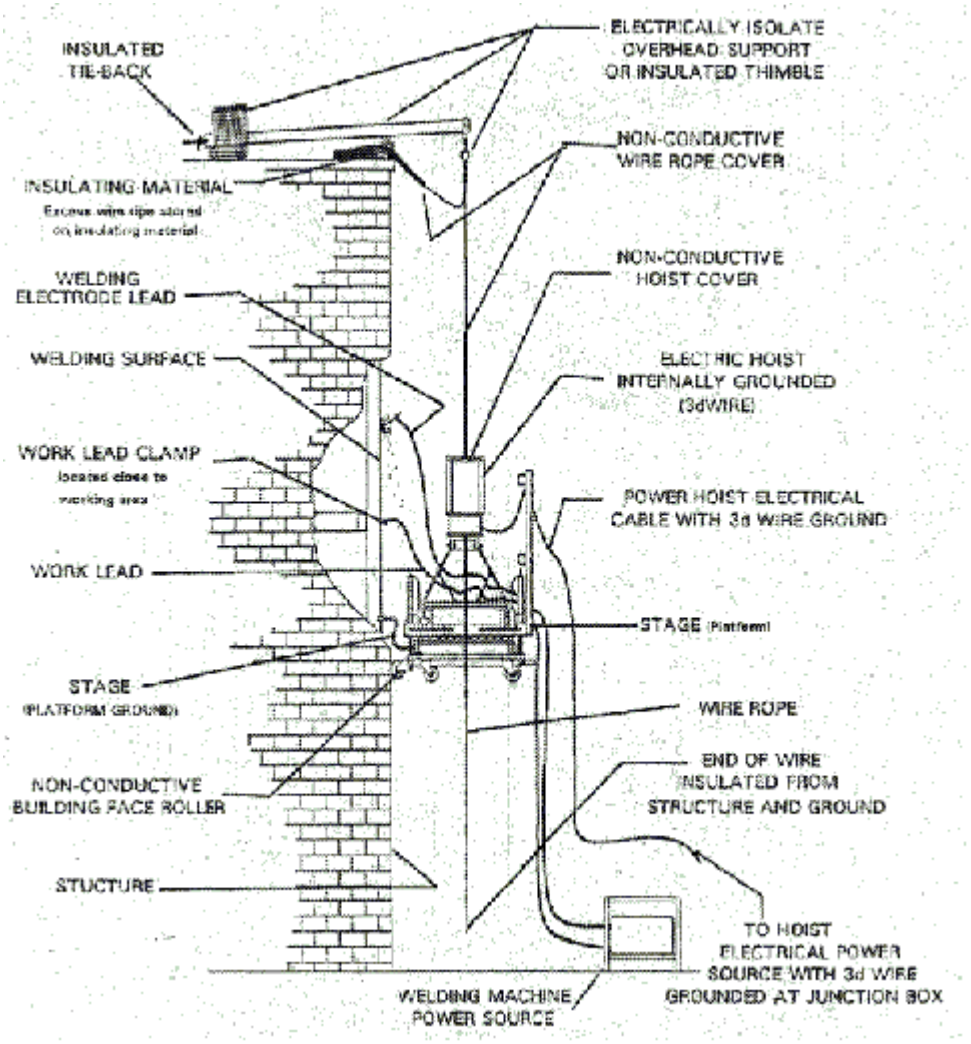

FIGURE L-1 (CONTINUED)

SCAFFOLDS

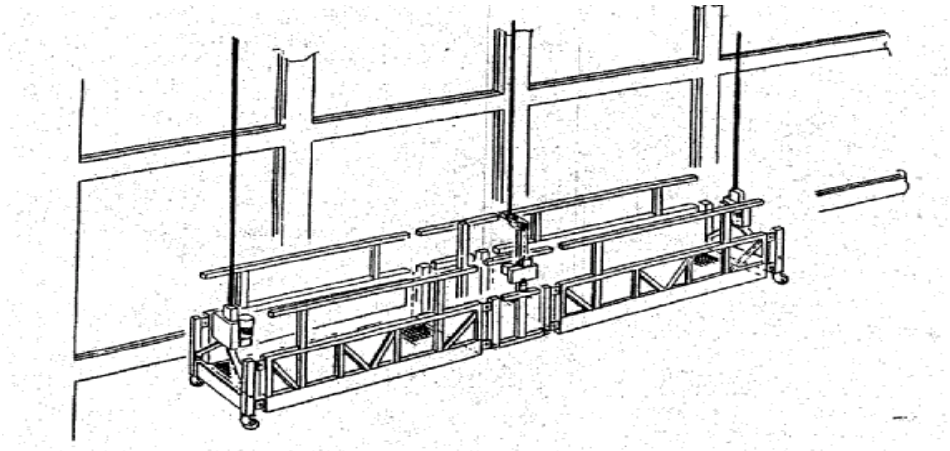

Modular Suspended Scaffold

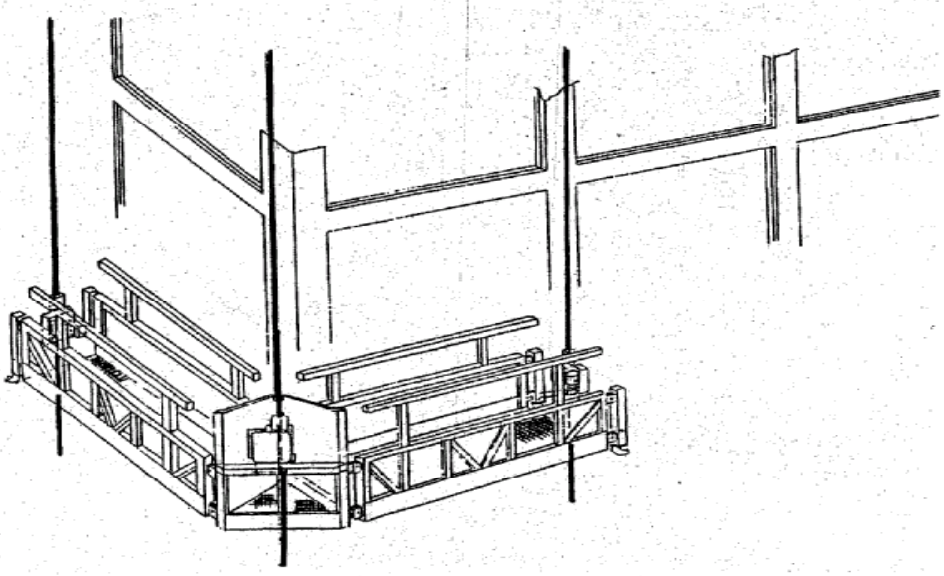

Modular Suspended Scaffold with an Angled Section

FIGURE L-1 (CONTINUED)

SCAFFOLDS

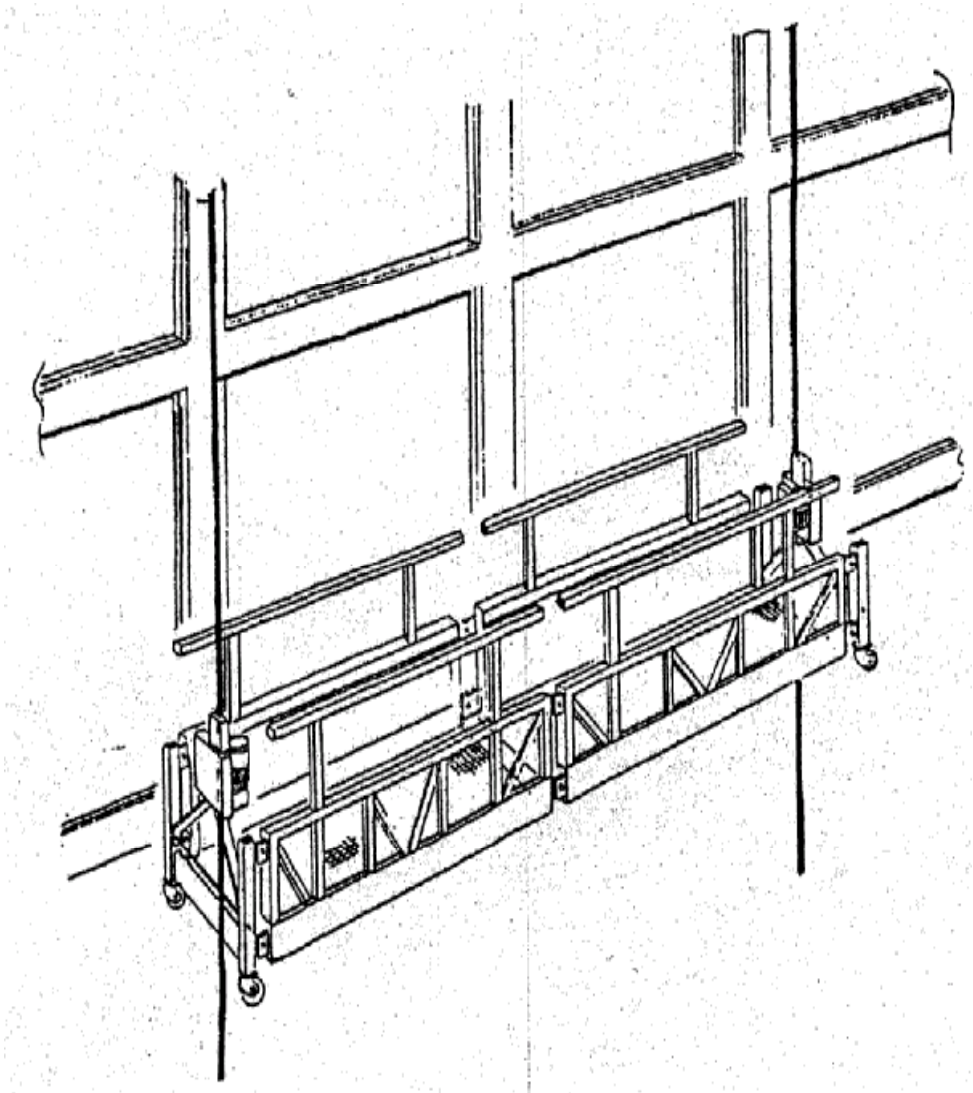

Two-Point Modular Suspended Scaffold

FIGURE L-1 (CONTINUED)

SCAFFOLDS

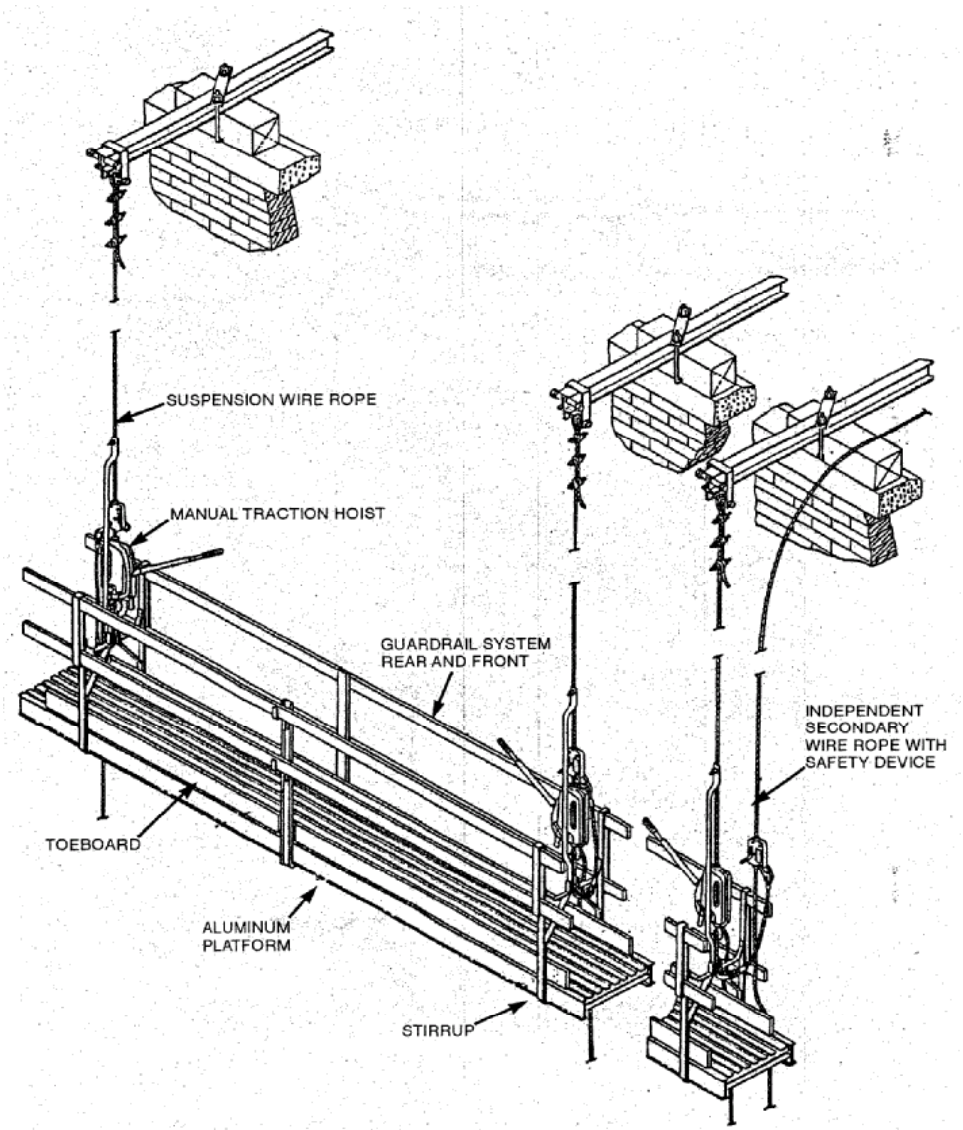

Two-Point Suspension Scaffold with Manual Traction Hoists

FIGURE L-1 (CONTINUED)

SCAFFOLDS

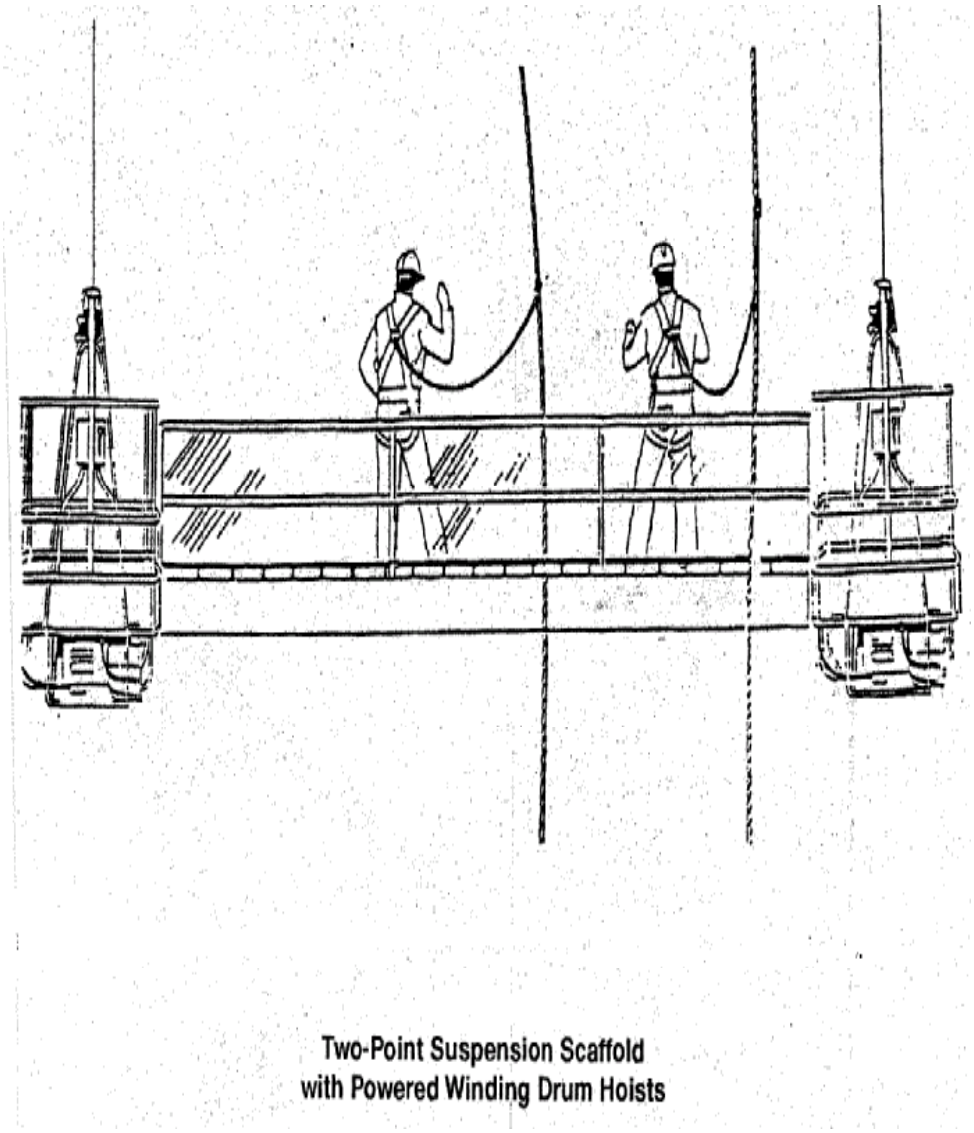

Two-Point Suspension Scaffold
with Powered Winding Drum Hoists

FIGURE L-1 (CONTINUED)

SCAFFOLDS

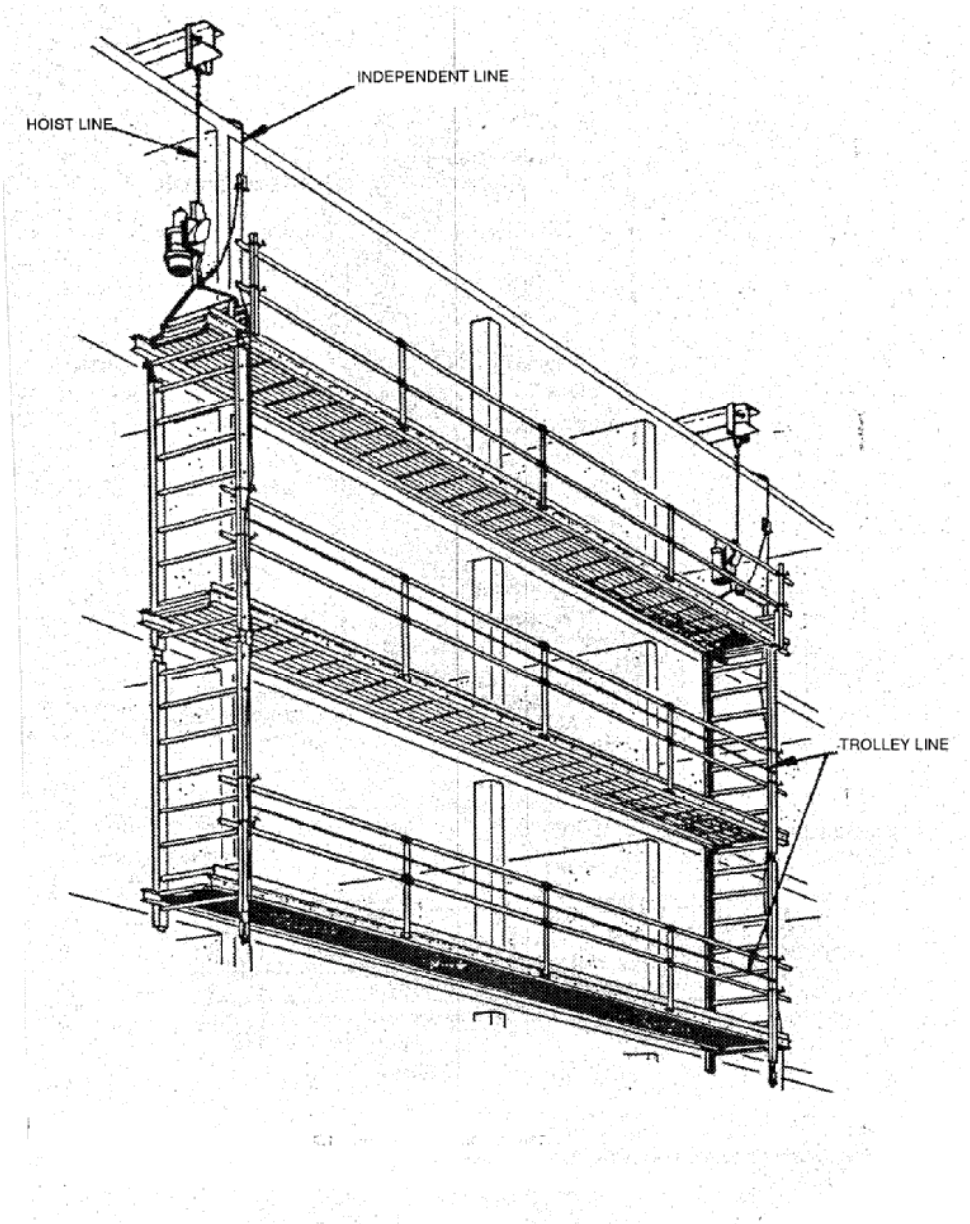

Multiple-Level Suspended Scaffold with Powered Hoists

FIGURE L-1 (CONTINUED)

SCAFFOLDS

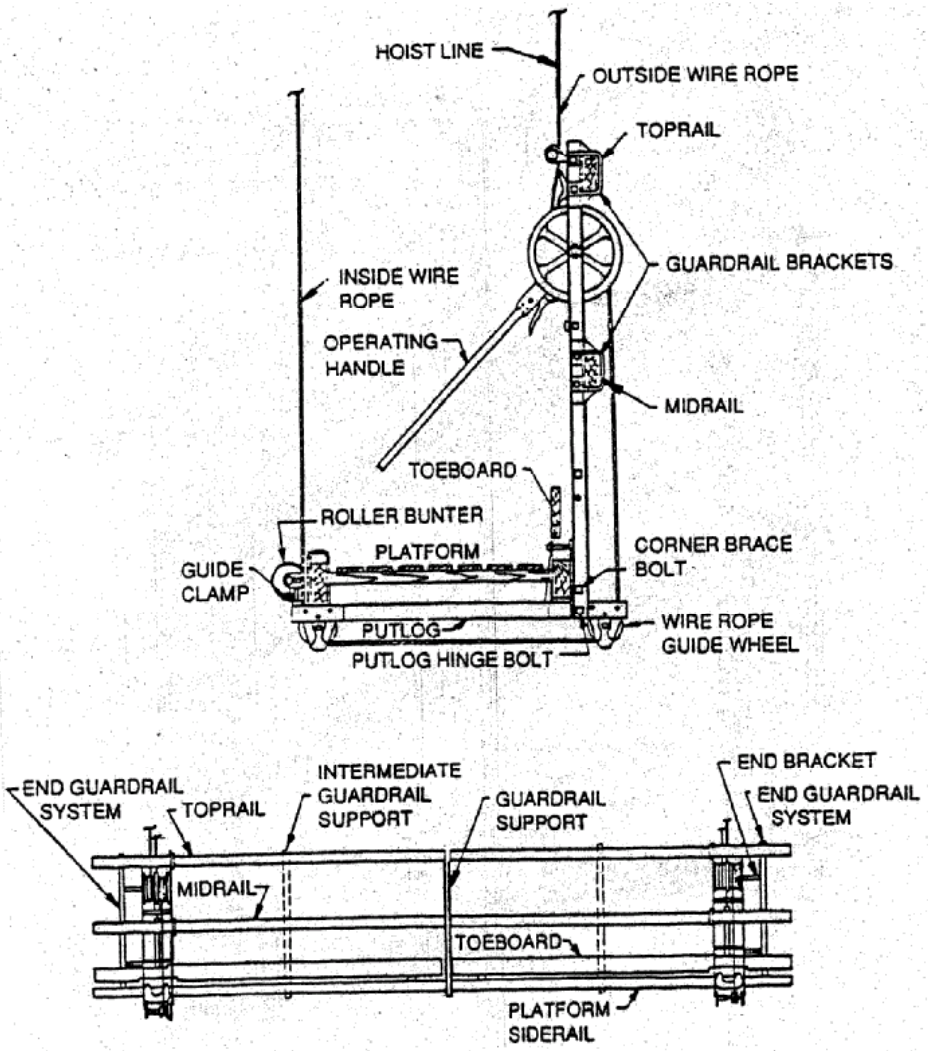

Stone Setters' Adjustable
Manual Multiple-Point Suspension Scaffold

FIGURE L-1 (CONTINUED)

SCAFFOLDS

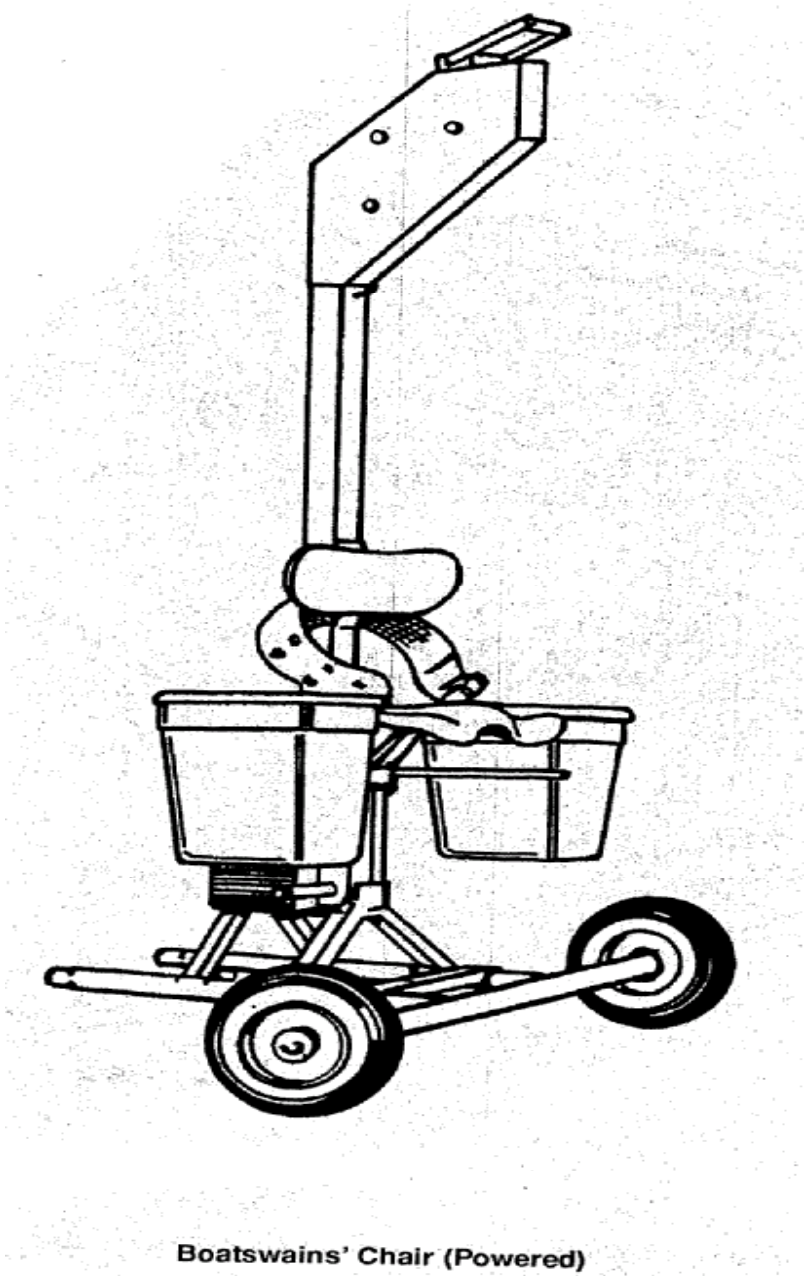

Boatswains' Chair (Powered)

FIGURE L-1 (CONTINUED)

SCAFFOLDS

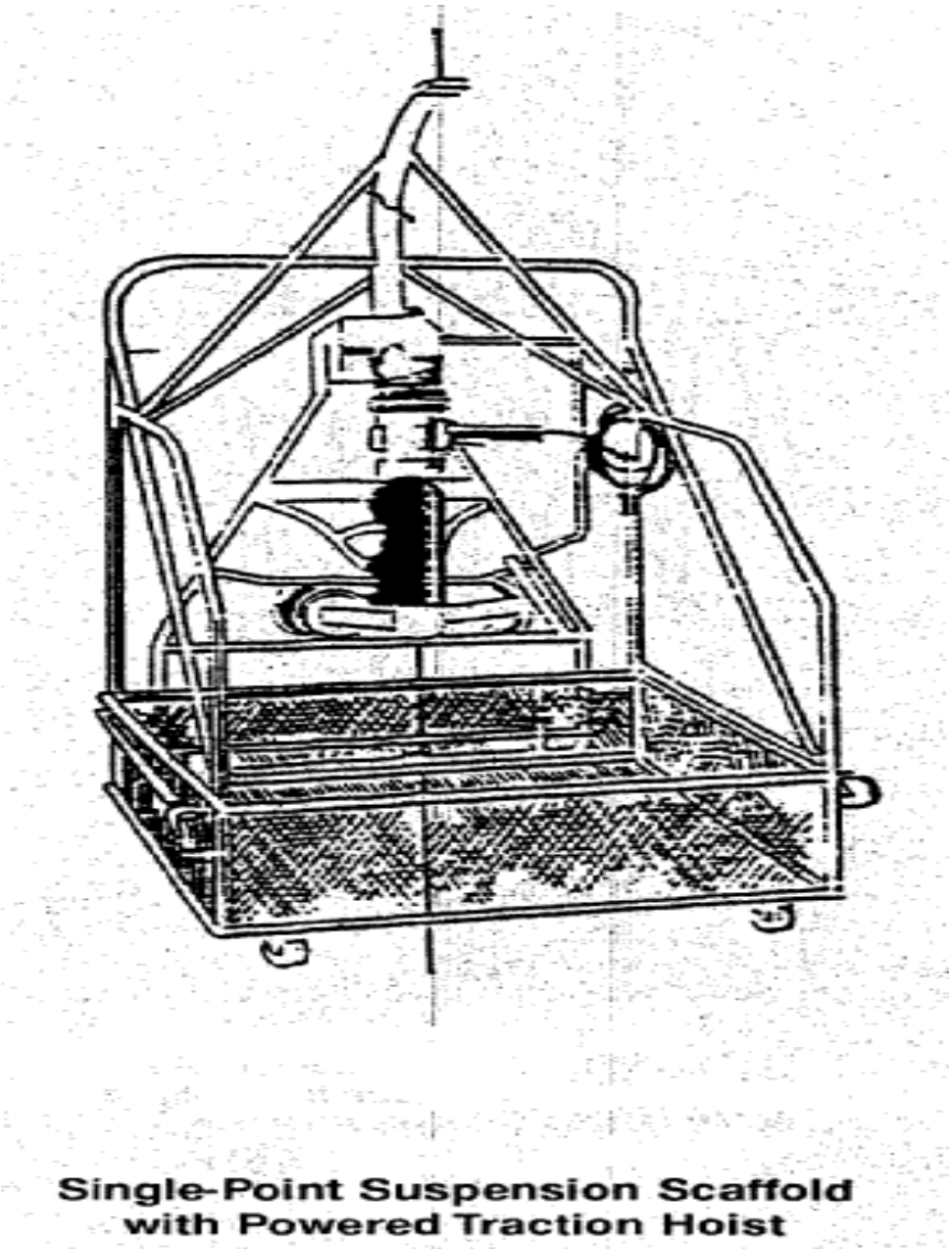

Single-Point Suspension Scaffold with Powered Traction Hoist

FIGURE L-1 (CONTINUED)

SCAFFOLDS

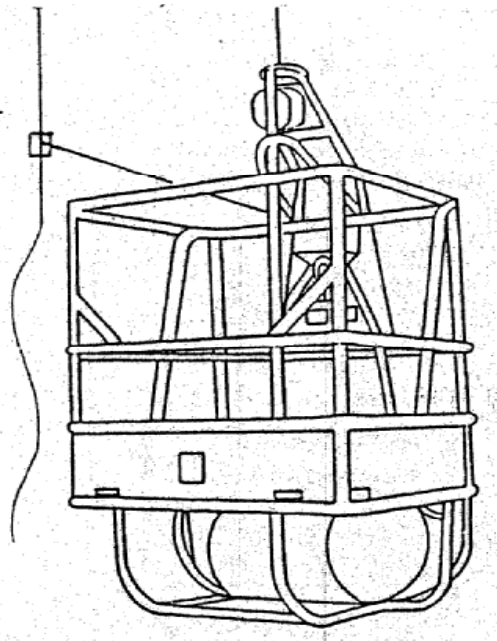

Single-Point Suspension Scaffold with Winding Drum Hoist

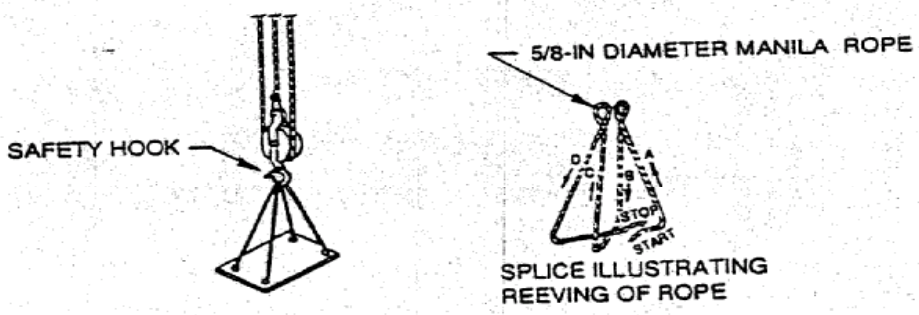

Boatswains' Chair (Manual)

FIGURE L-1 (CONTINUED)

SCAFFOLDS

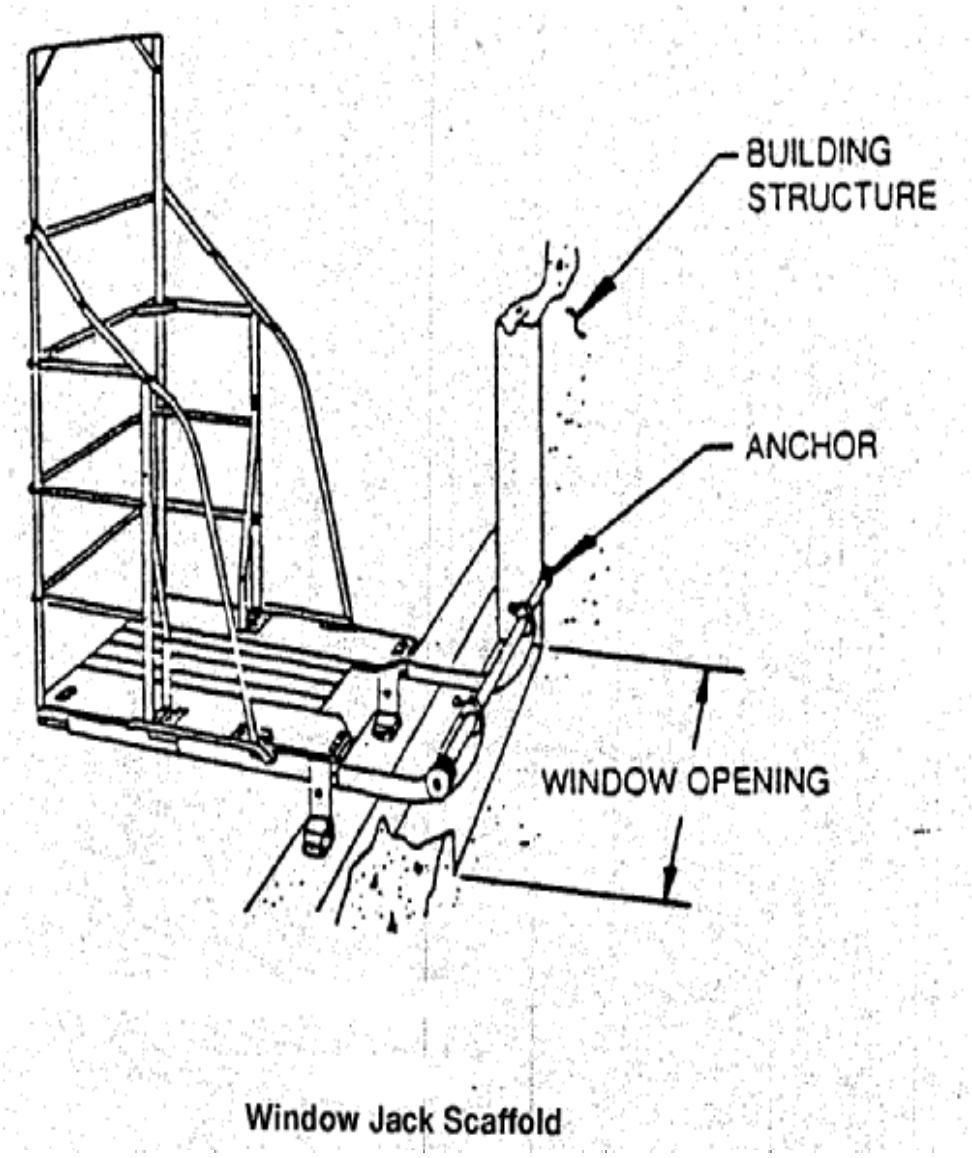

Window Jack Scaffold

FIGURE L-1 (CONTINUED)

SCAFFOLDS

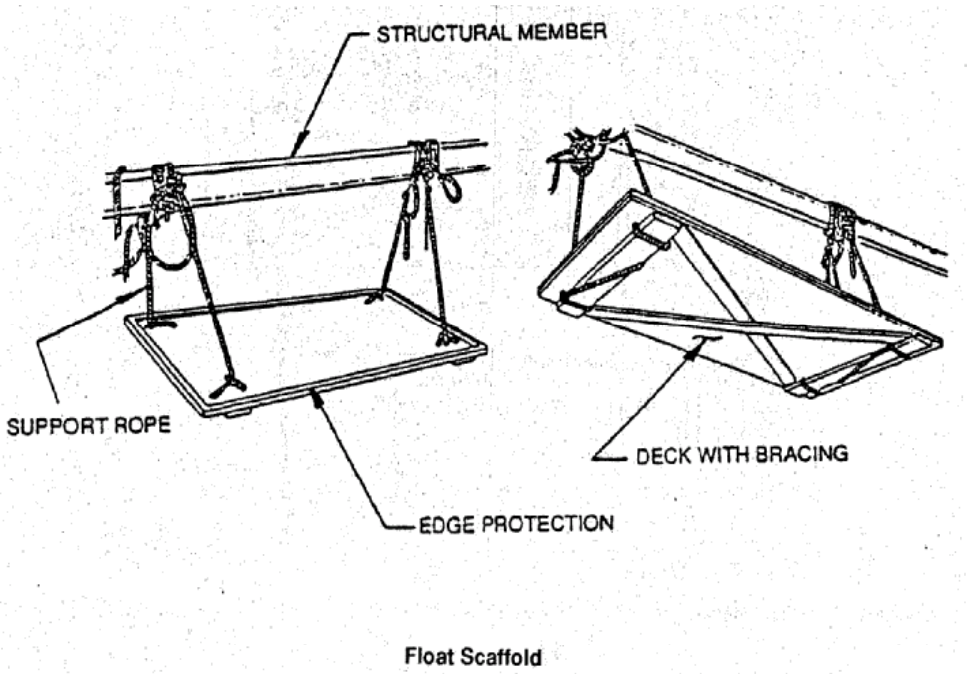

Float Scaffold

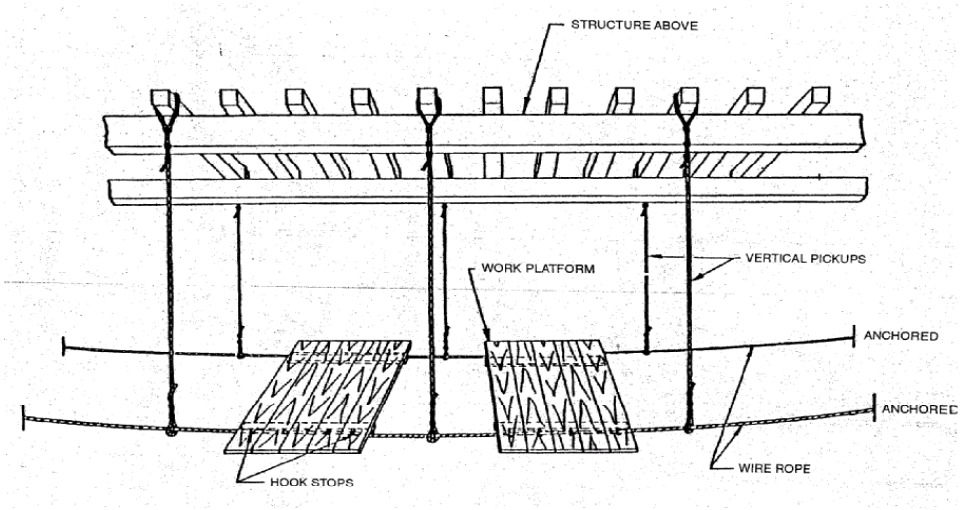

Figure. Catenary Scaffold

FIGURE L-1 (CONTINUED)

SCAFFOLDS

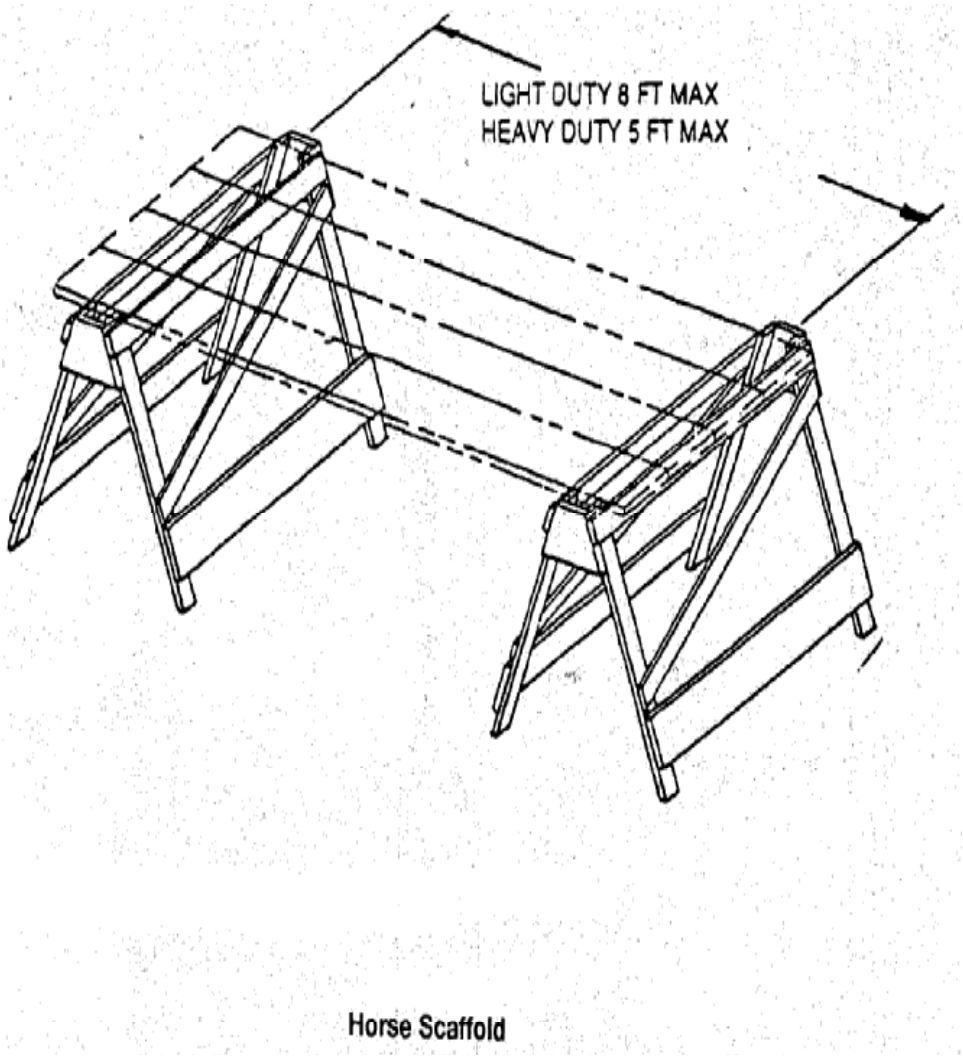

FIGURE L-1 (CONTINUED)

SCAFFOLDS

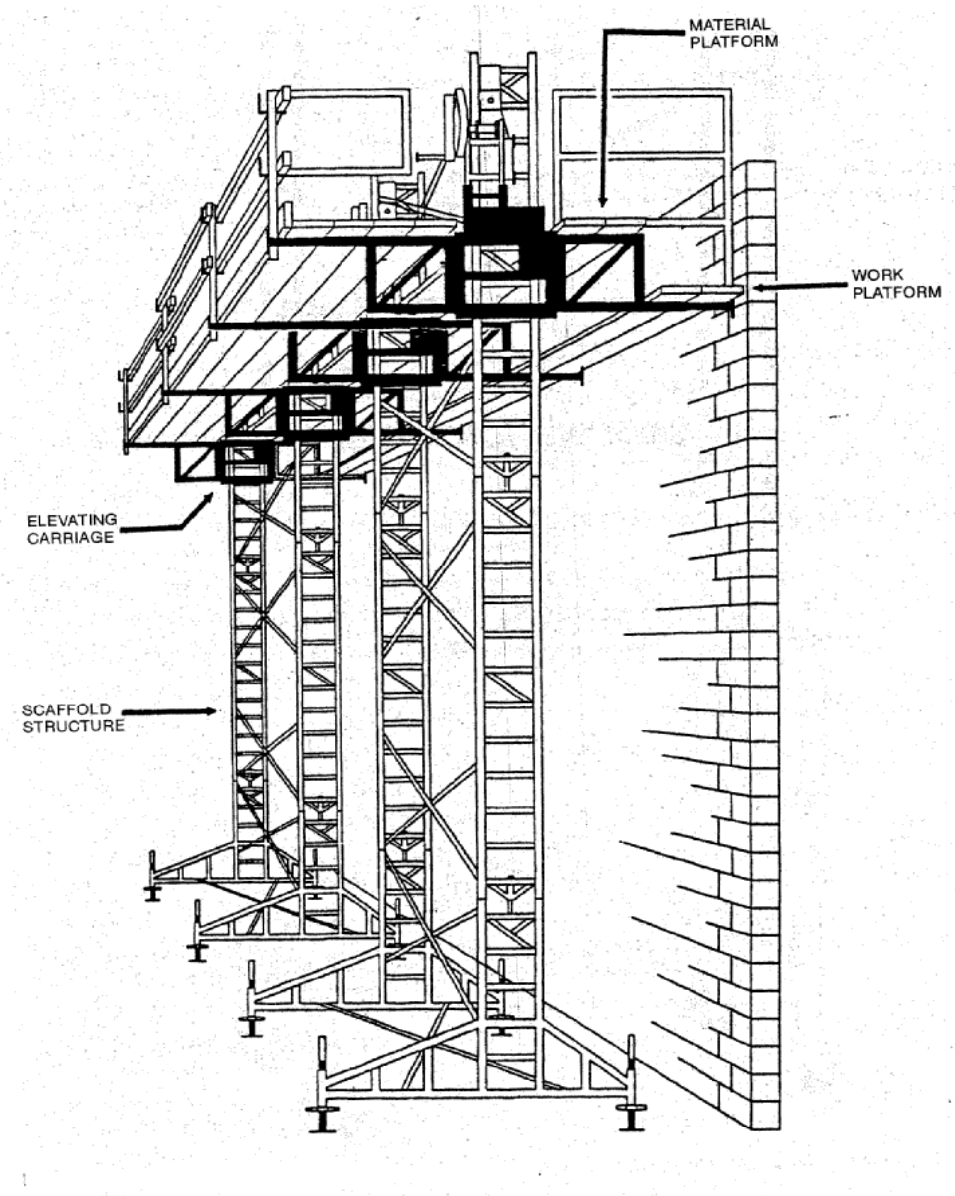

Adjustable Scaffold

FIGURE L-1 (CONTINUED)

SCAFFOLDS

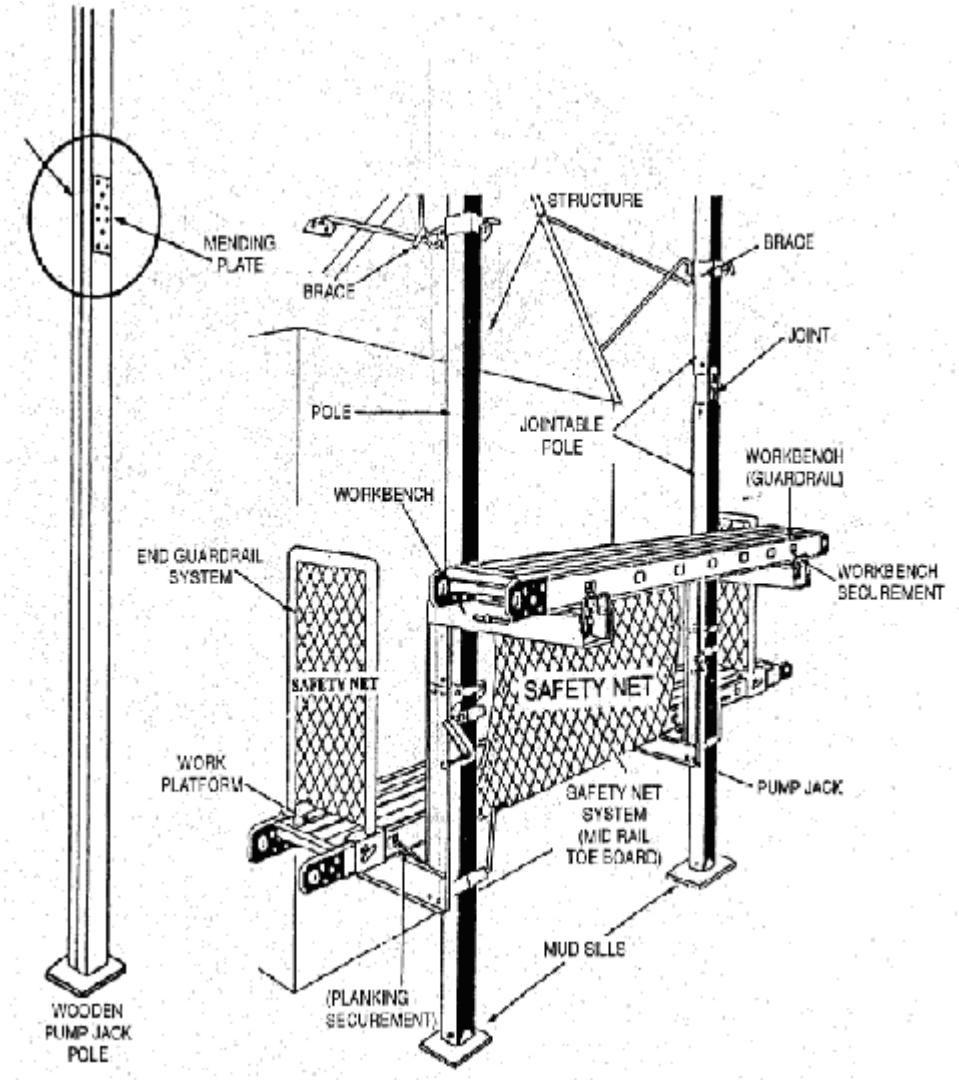

FIGURE L-1 (CONTINUED)

SCAFFOLDS

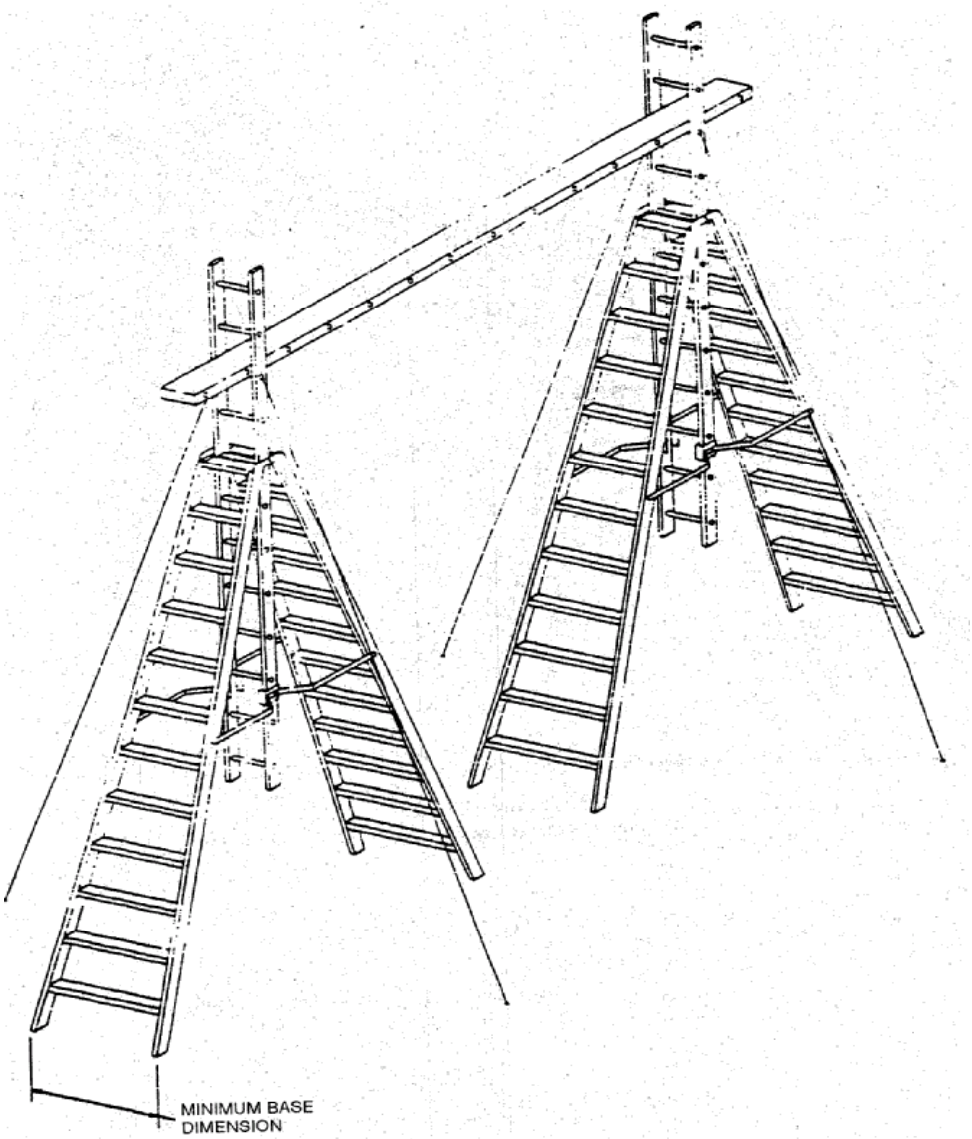

Extension Trestle Ladder Scaffold

FIGURE L-1 (CONTINUED)

SCAFFOLDS

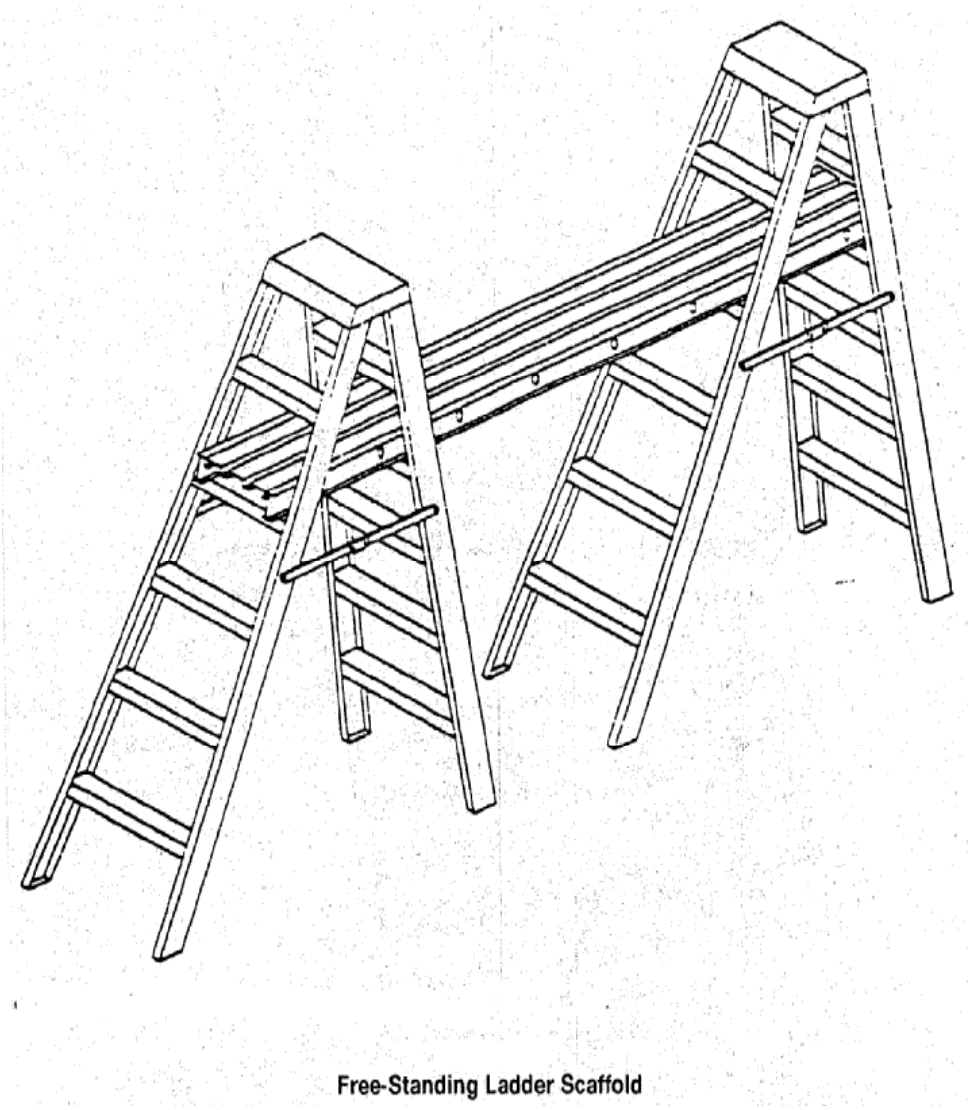

Free-Standing Ladder Scaffold

FIGURE L-1 (CONTINUED)

SCAFFOLDS

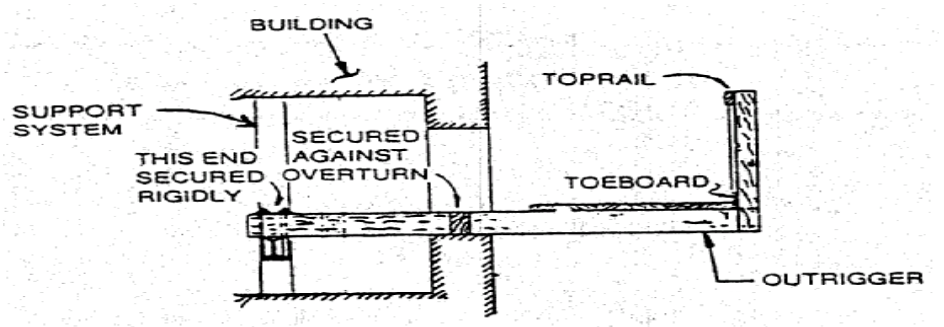

Outrigger Scaffold

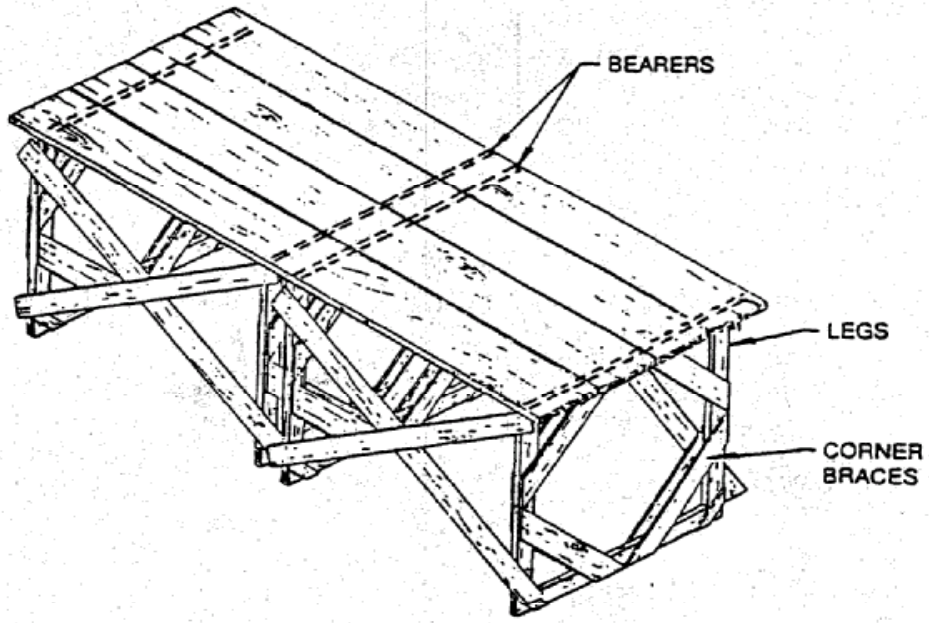

Bricklayers' Square Scaffold

FIGURE L-1 (CONTINUED)

SCAFFOLDS

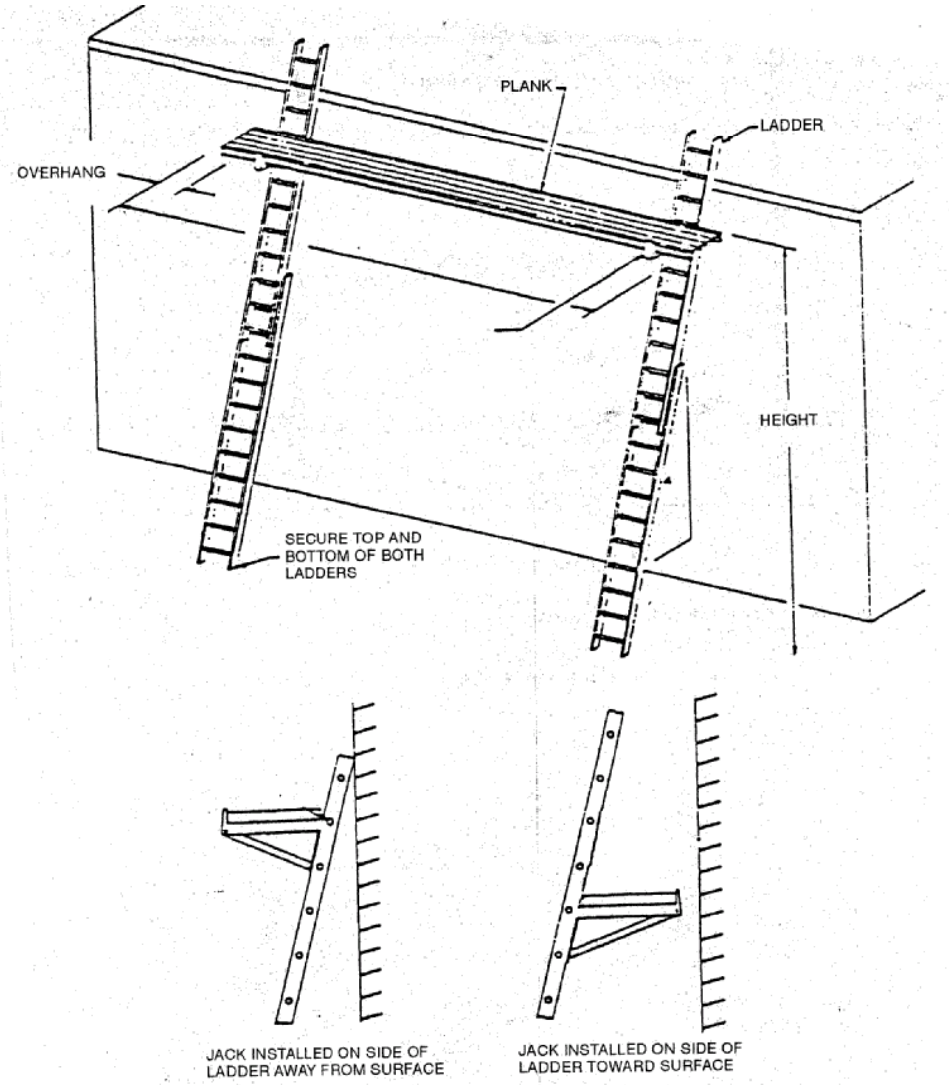

Ladder Jack Scaffold

PROHIBITED

FIGURE L-1 (CONTINUED)

SCAFFOLDS

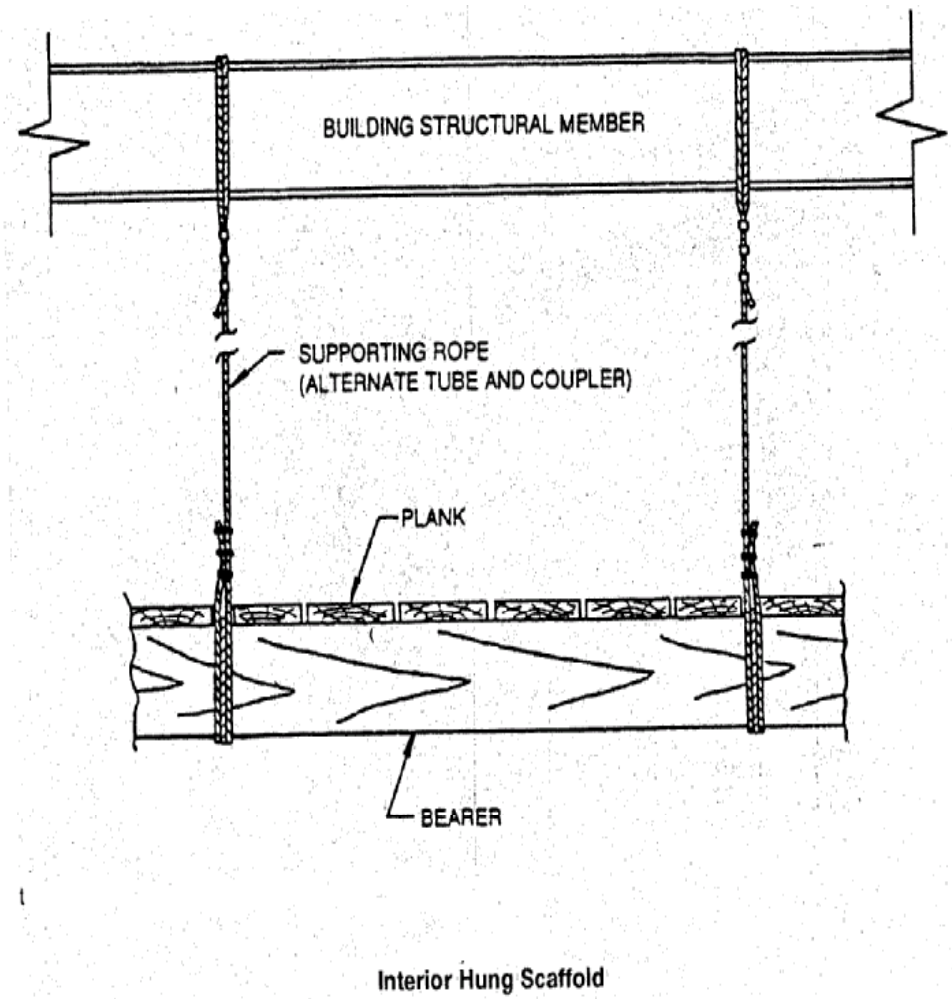

Interior Hung Scaffold

FIGURE L-1 (CONTINUED)

SCAFFOLDS

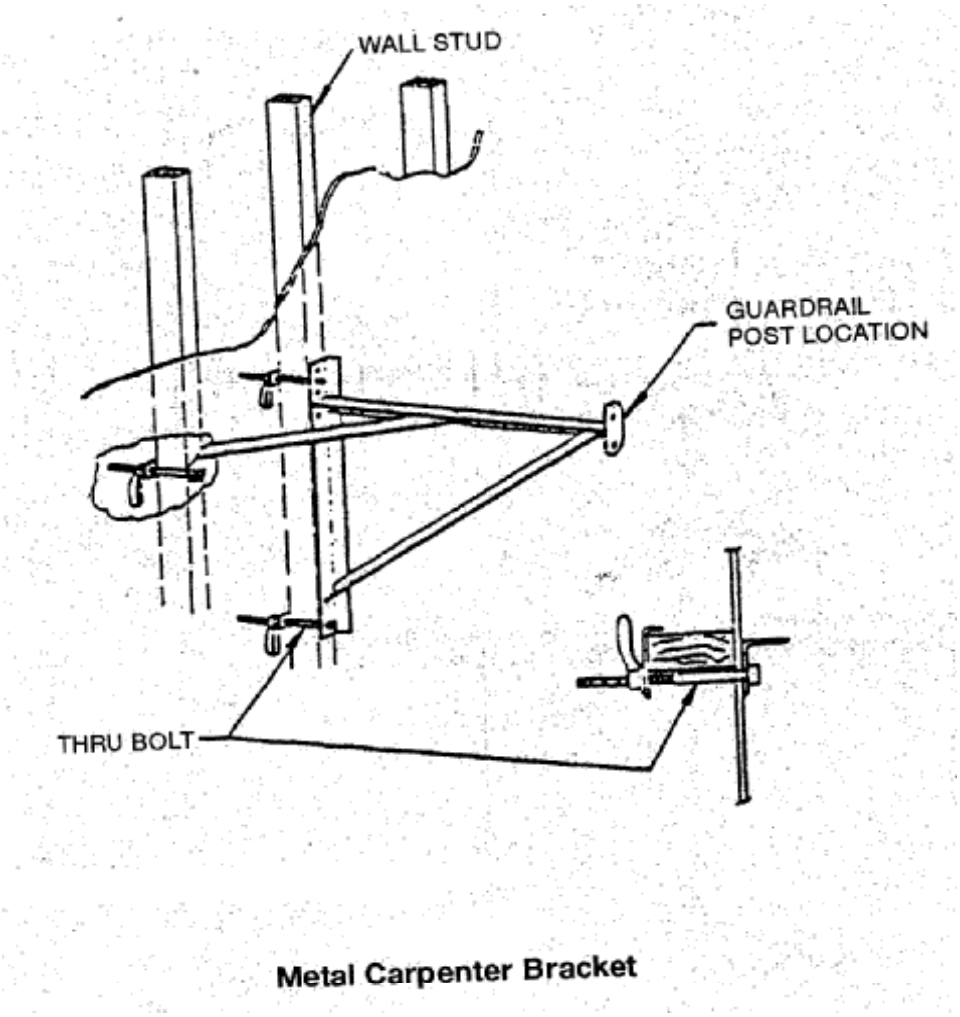

FIGURE L-1 (CONTINUED)

SCAFFOLDS

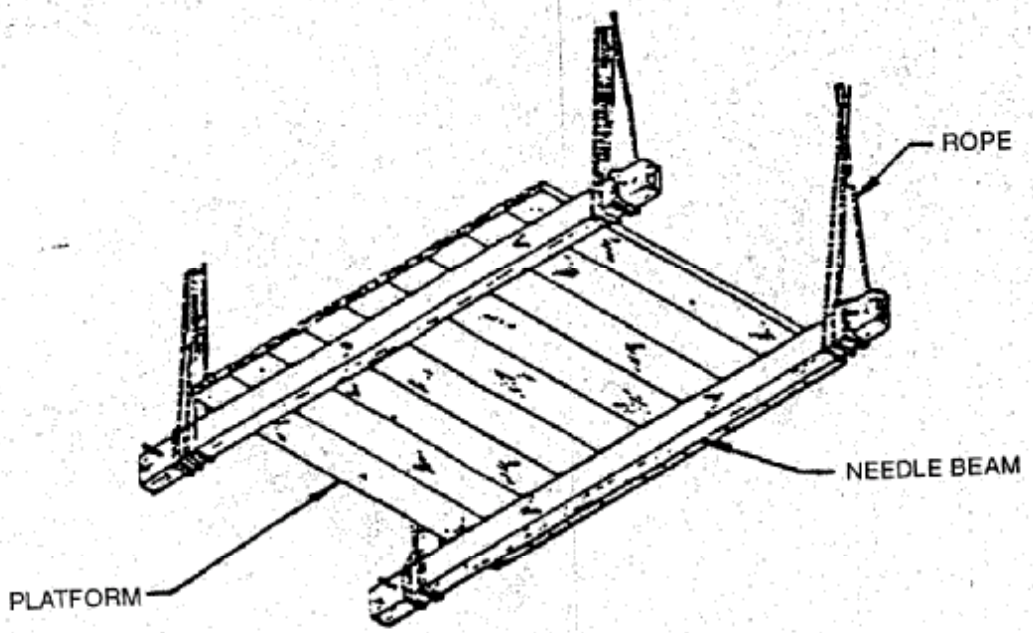

Needle Beam Scaffold

FIGURE L-1 (CONTINUED)

SCAFFOLDS

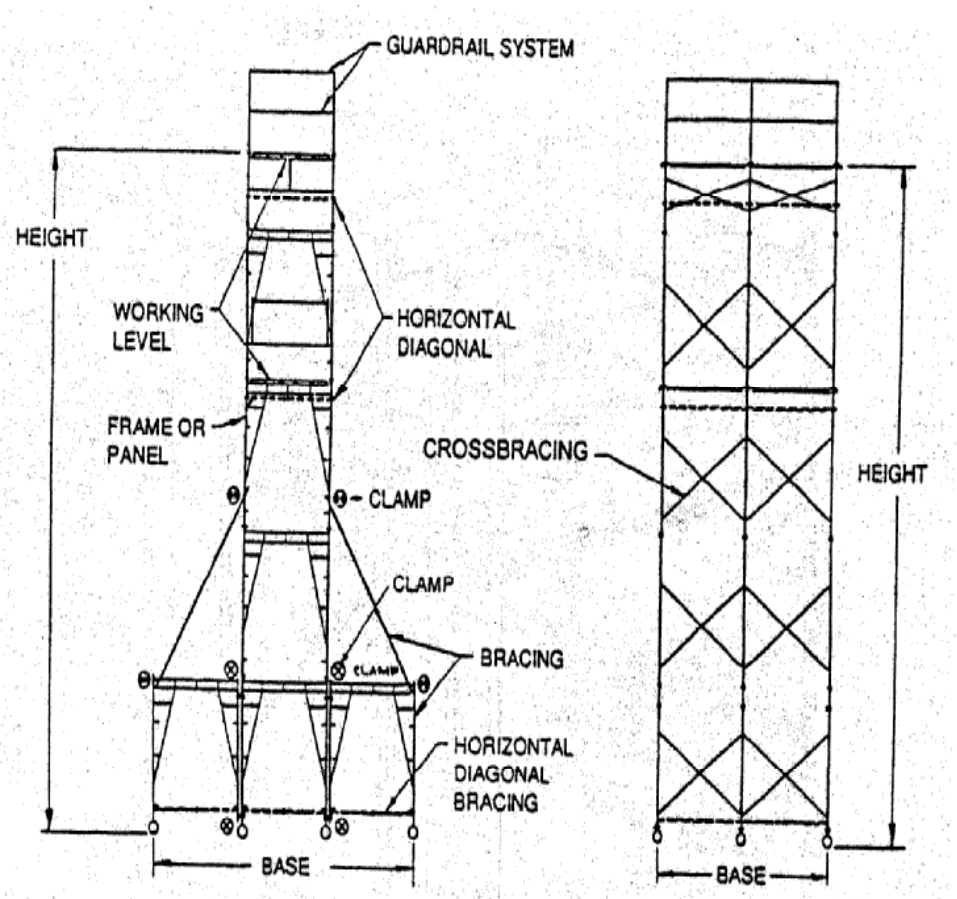

Manually Propelled Mobile Scaffold (2)
(Fabricated Tubular Frame)

FIGURE L-1 (CONTINUED)

SCAFFOLDS

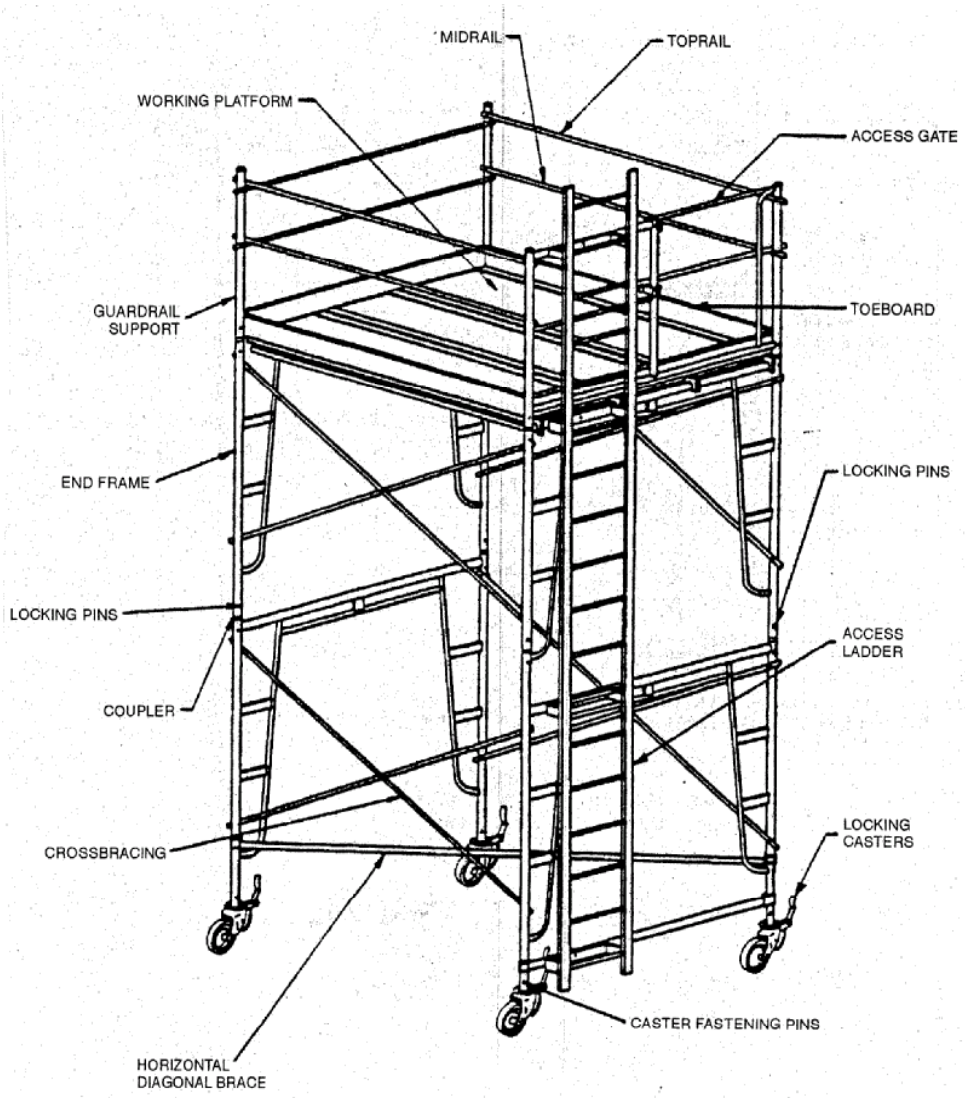

Manually Propelled Mobile Scaffold (Fabricated Tubular Frame)

FIGURE L-1 (CONTINUED)

SCAFFOLDS

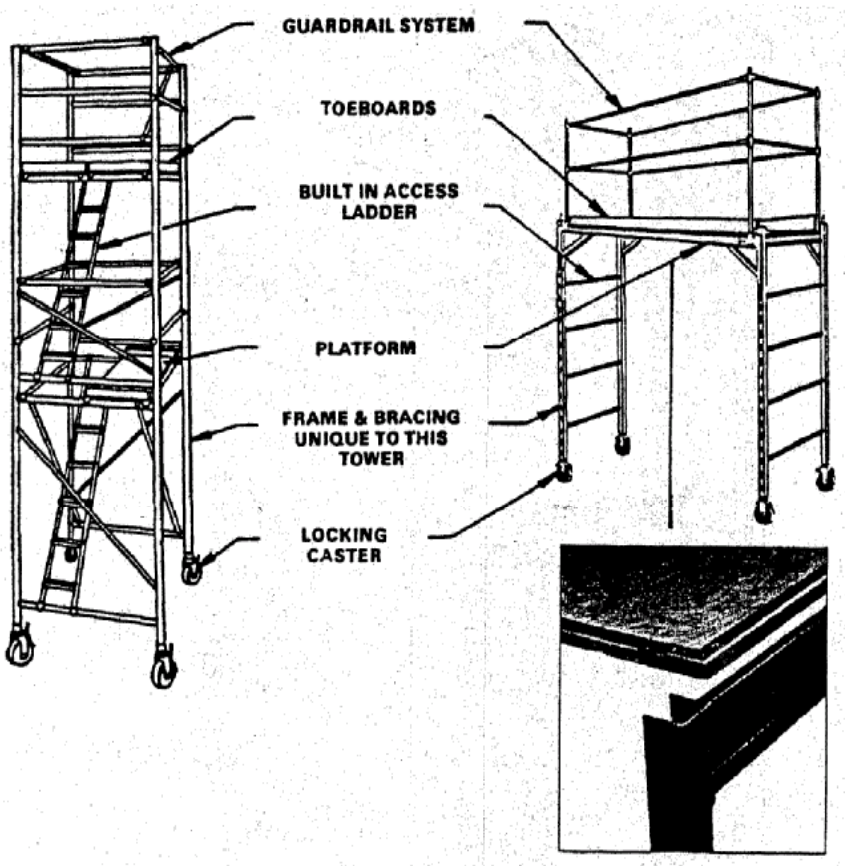

Truss and Platform

The platform is supported by the truss/support member. The truss is attached to the end frame/access ladder. The platform is secured in position through placement of the platform upon the inner ledge and within the side and end rails of the truss/support member.

Manually Propelled and
Prefabricated Mobile Scaffolds

FIGURE L-1 (CONTINUED)

SCAFFOLDS

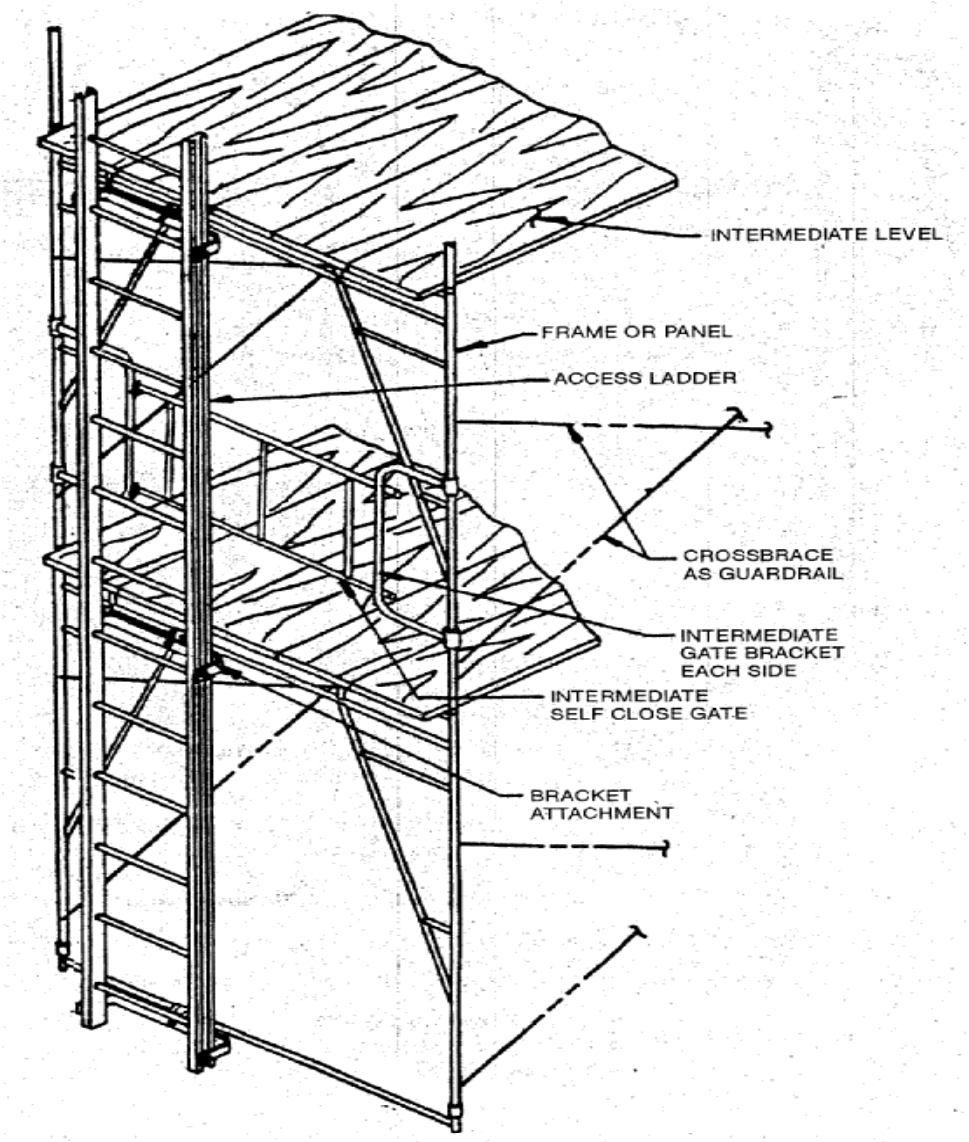

Frame Scaffold Access (2)

FIGURE L-1 (CONTINUED)

SCAFFOLDS

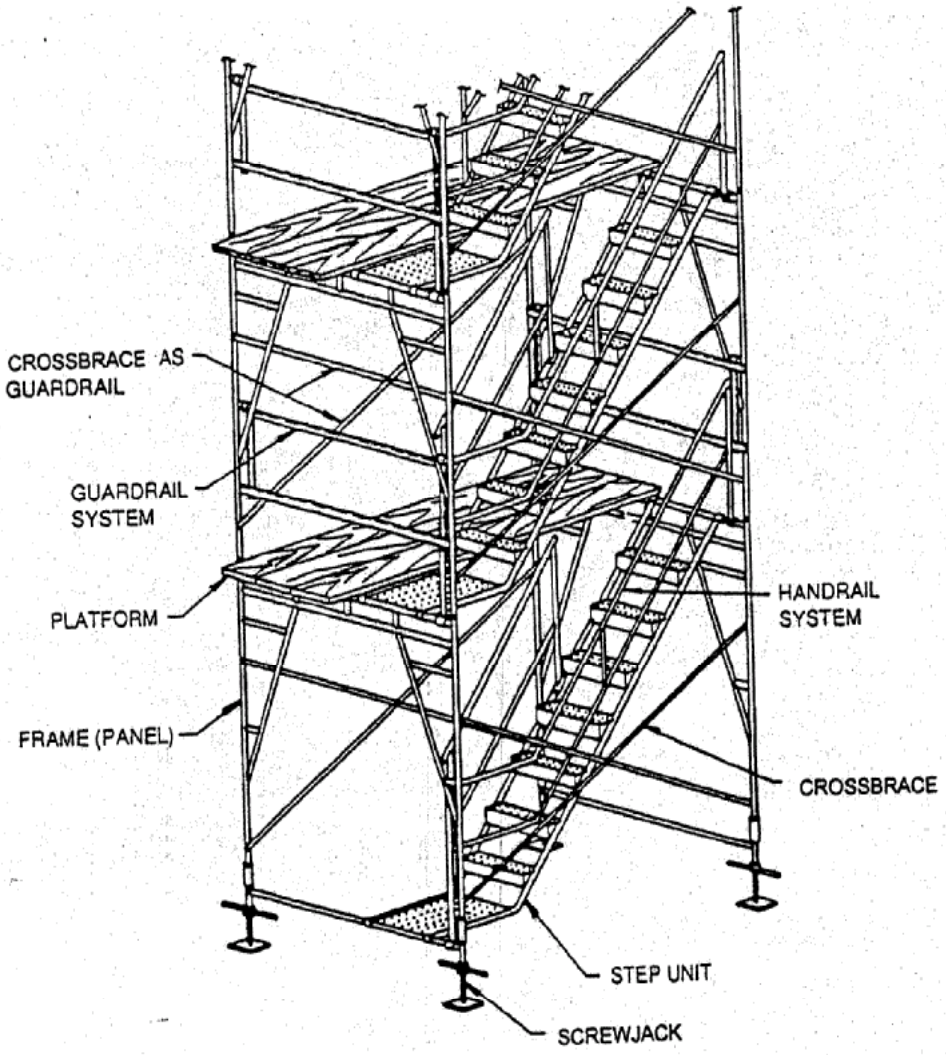

Frame Scaffold Access

FIGURE L-1 (CONTINUED)

SCAFFOLDS

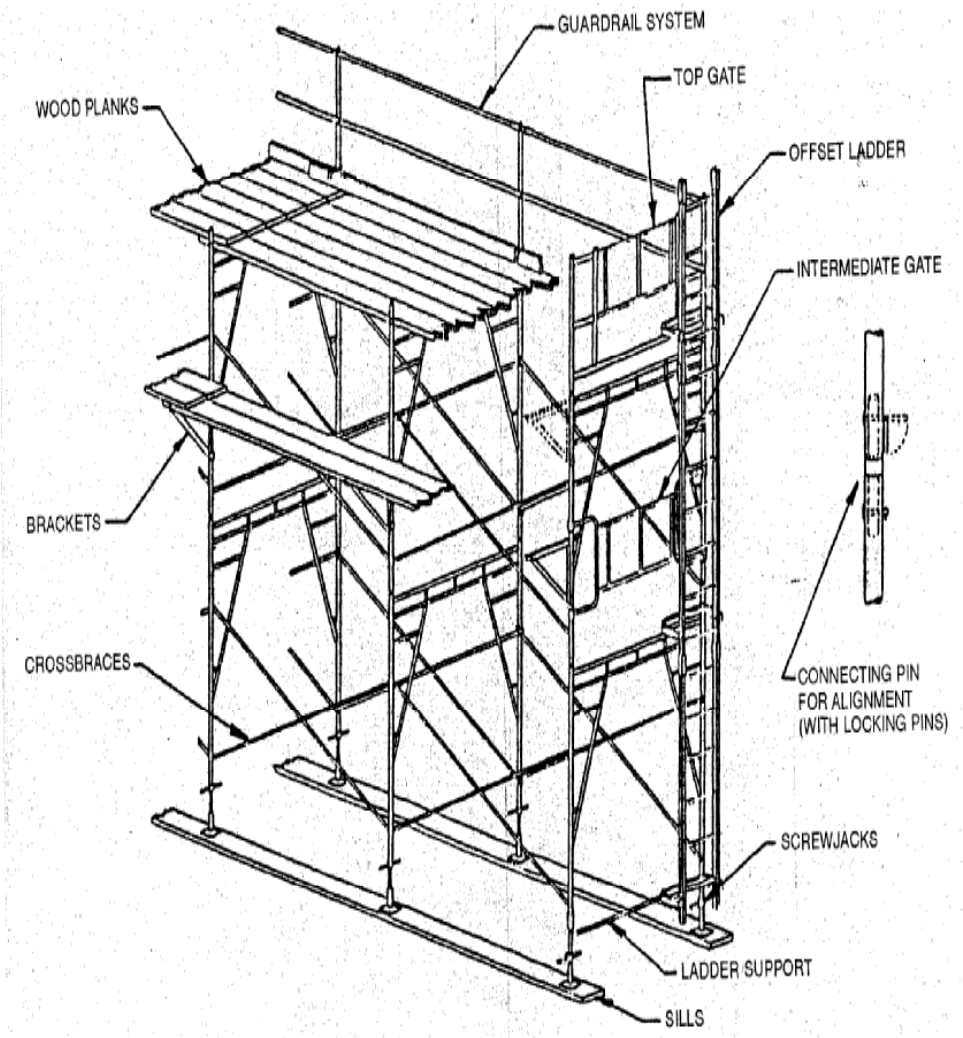

Fabricated Tubular Frame Scaffold

FIGURE L-1 (CONTINUED)

SCAFFOLDS

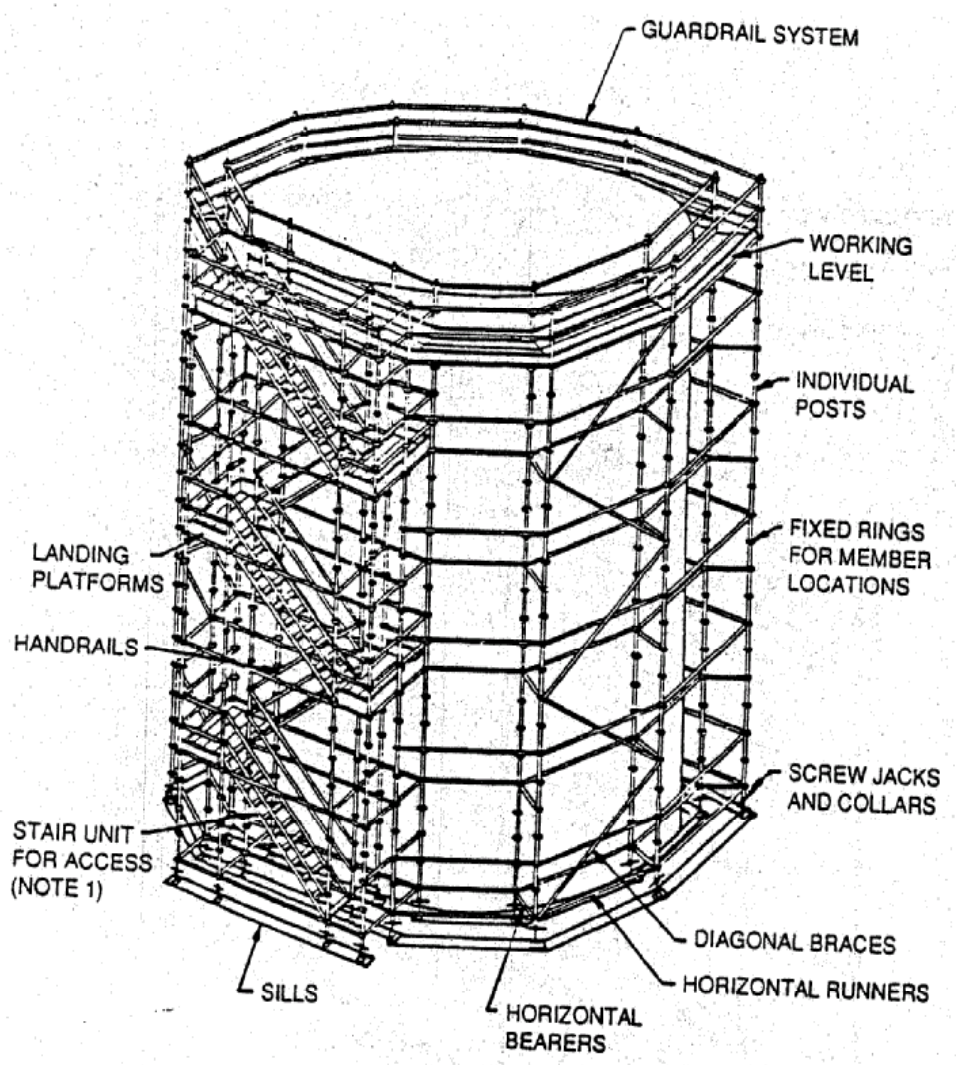

System Scaffold

FIGURE L-1 (CONTINUED)

SCAFFOLDS

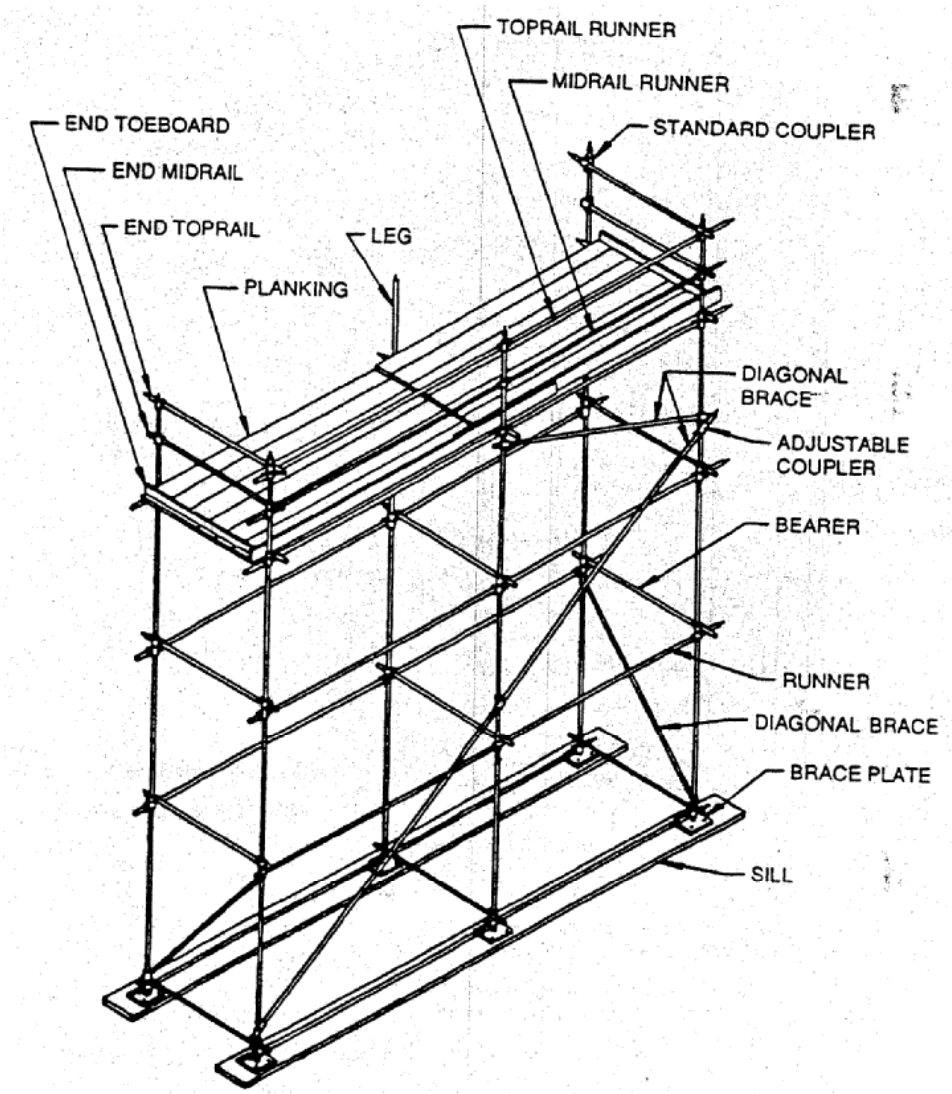

Tube and Coupler Scaffold

FIGURE L-1 (CONTINUED)

SCAFFOLDS

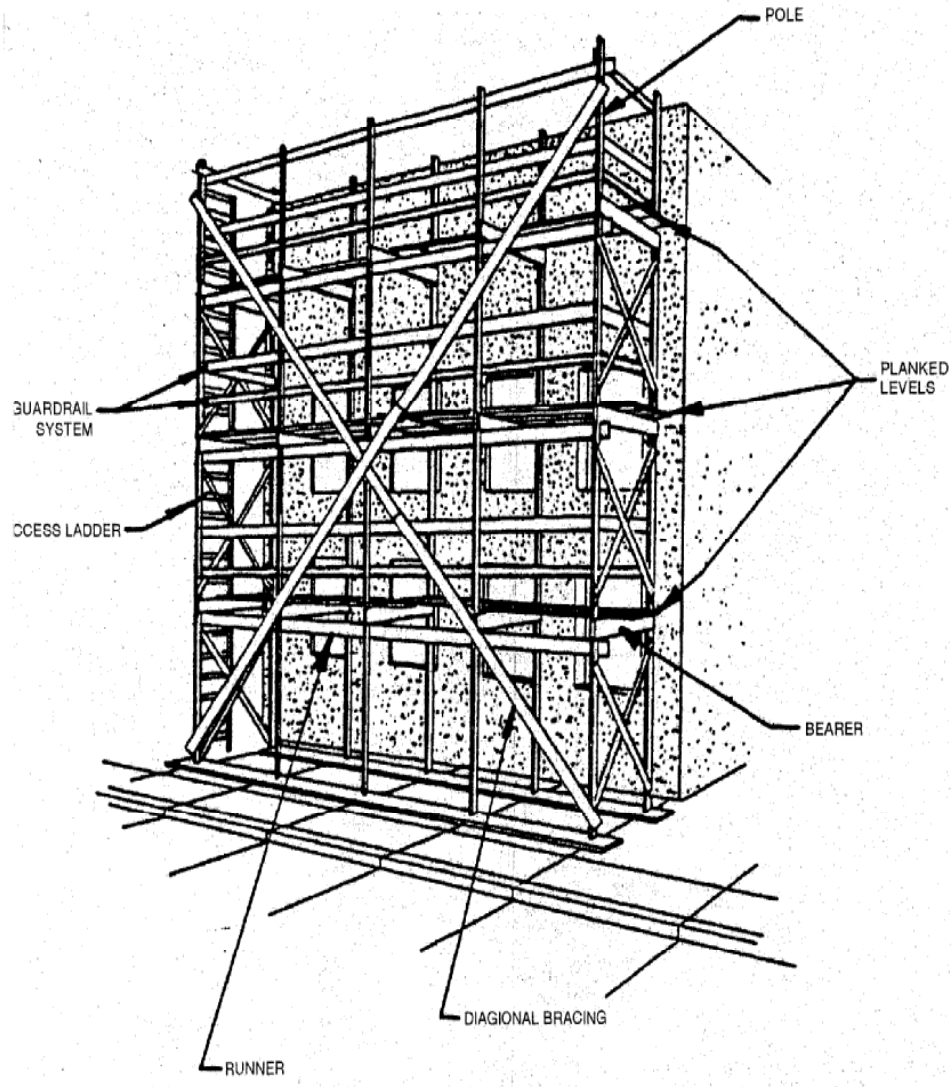

Wood Pole Scaffold

FIGURE L-1 (CONTINUED)

SCAFFOLDS

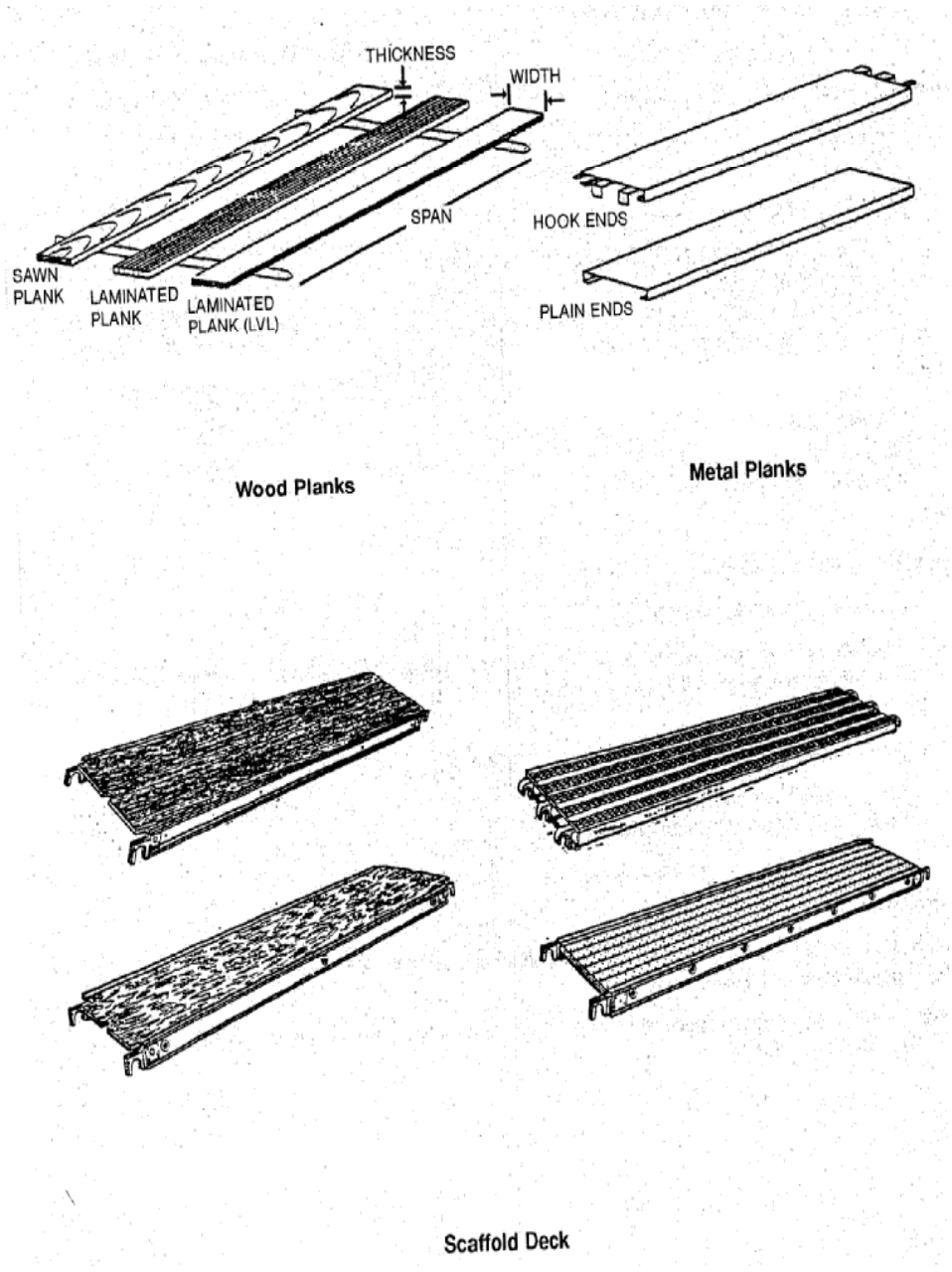

FIGURE L-1 (CONTINUED)

SCAFFOLDS

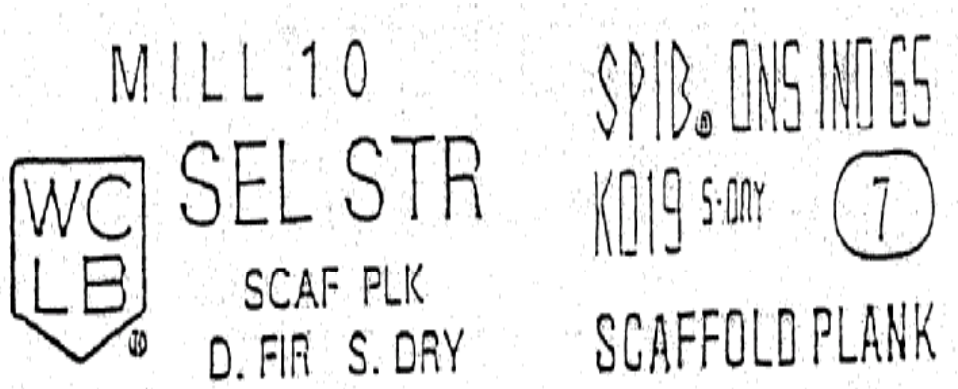

Examples of Grade Stamps

FIGURE L-2

WORK STANDS

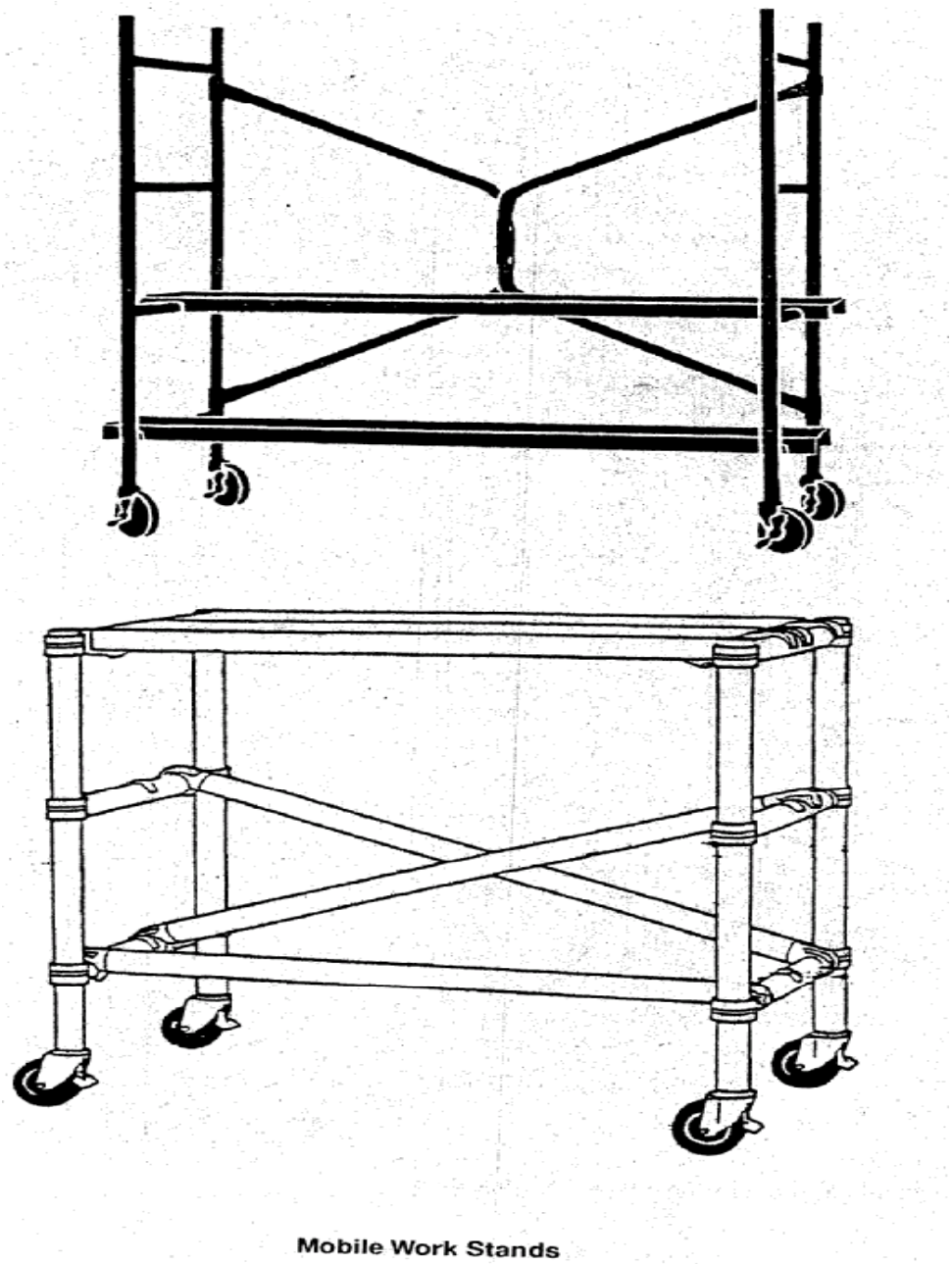

Mobile Work Stands

FIGURE L-3

PLATFORMS

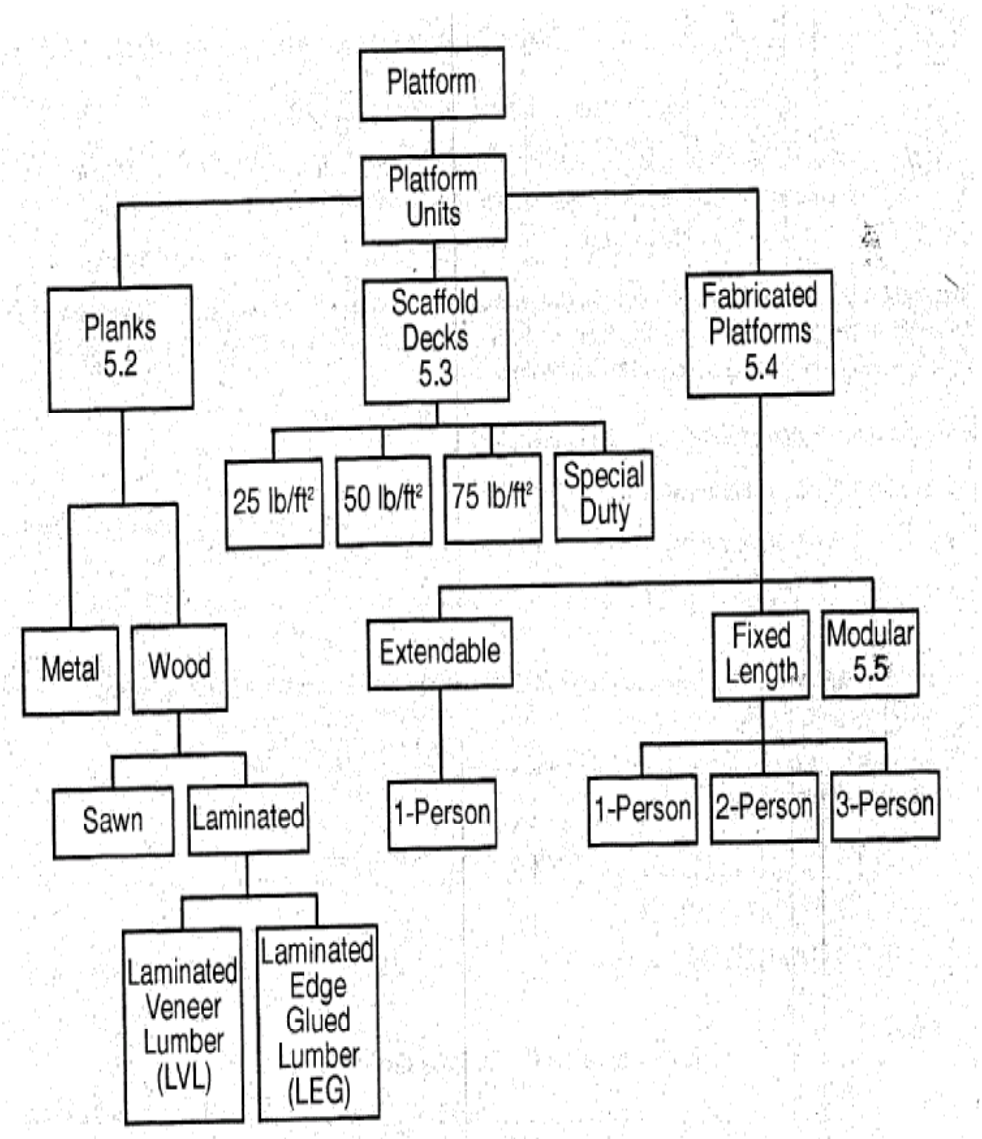

Platform and Platform Unit Categorization Chart

FIGURE L-3 (CONTINUED)

PLATFORMS

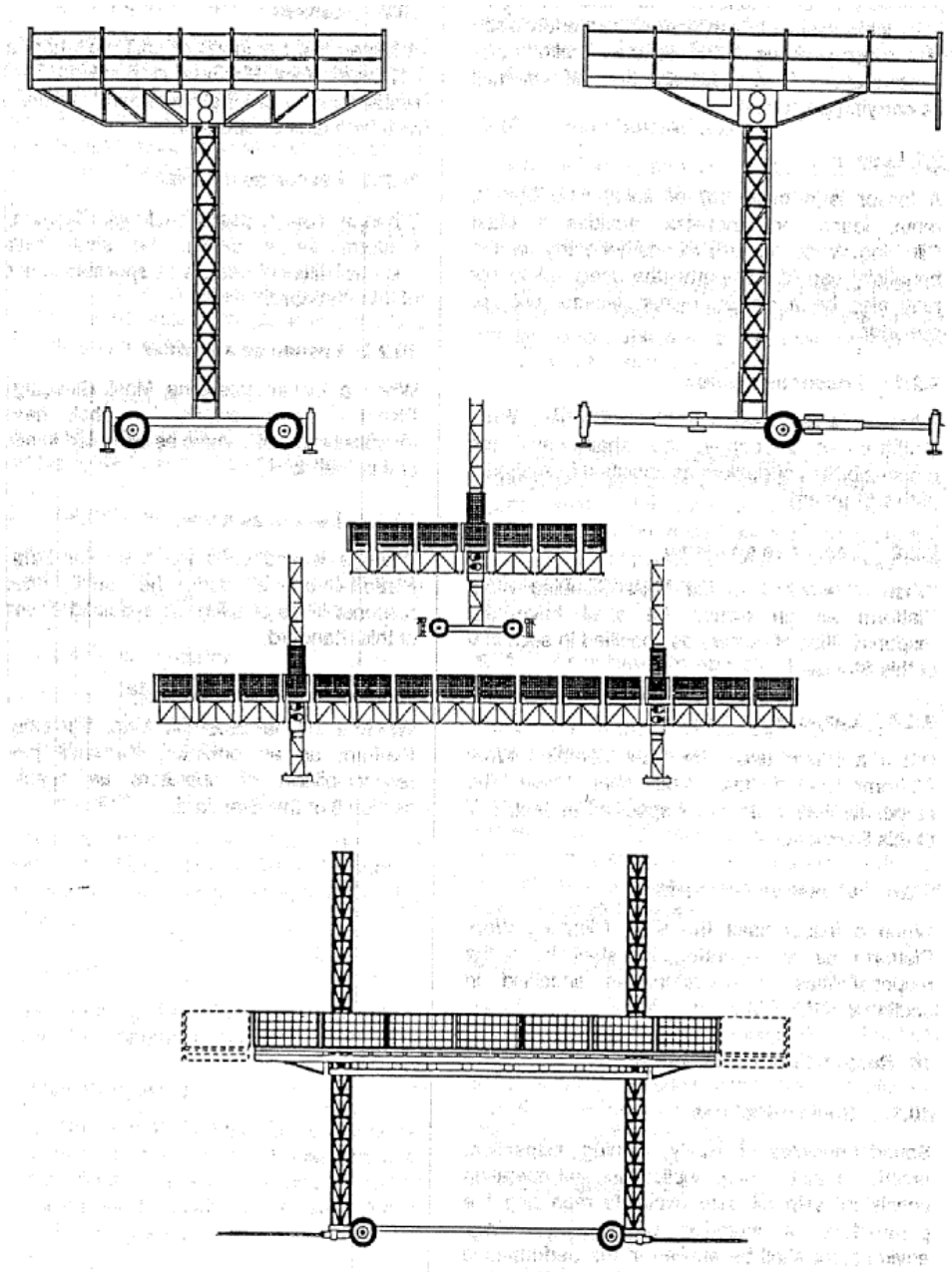

FIGURE L-3 (CONTINUED)

PLATFORMS

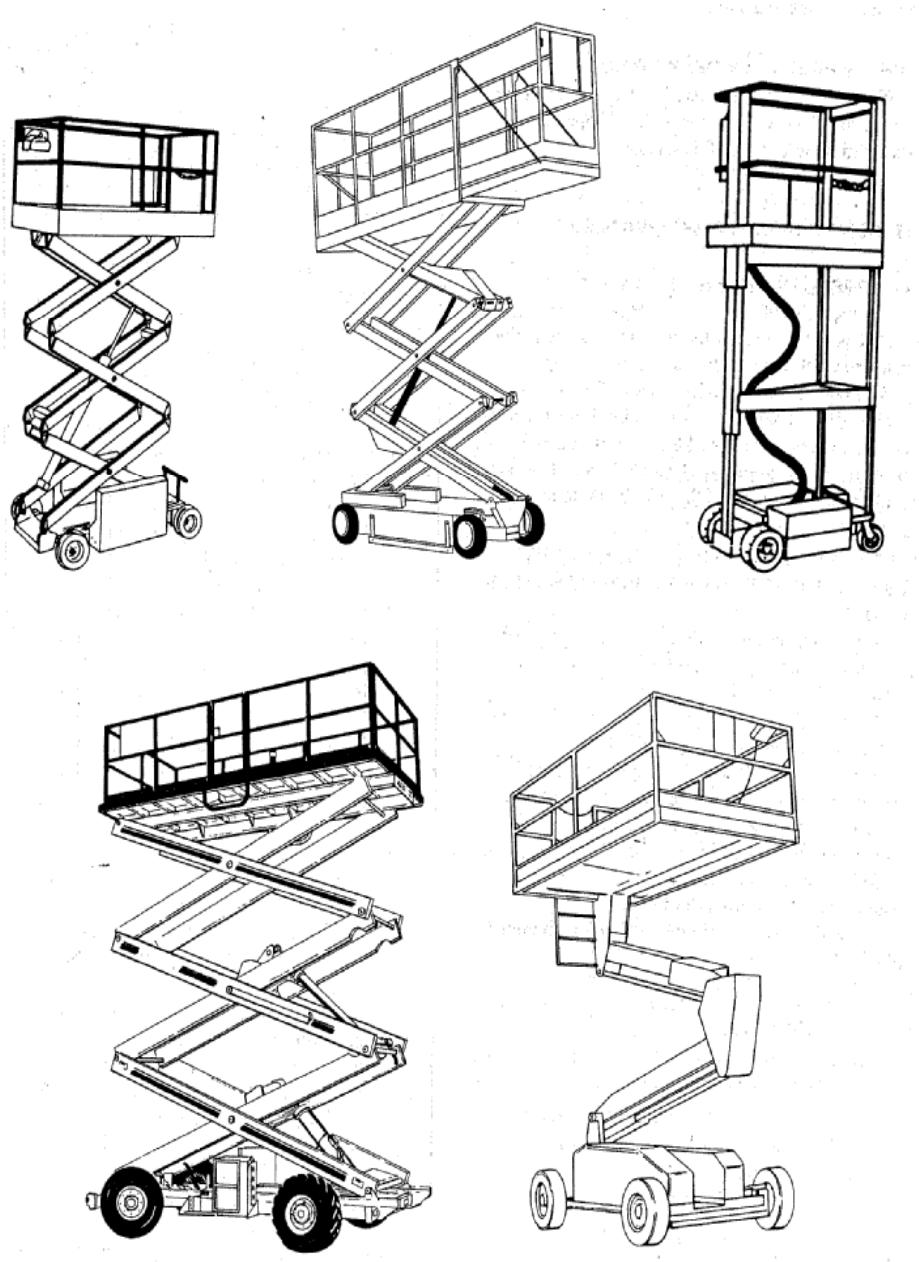

FIGURE L-3 (CONTINUED)

PLATFORMS

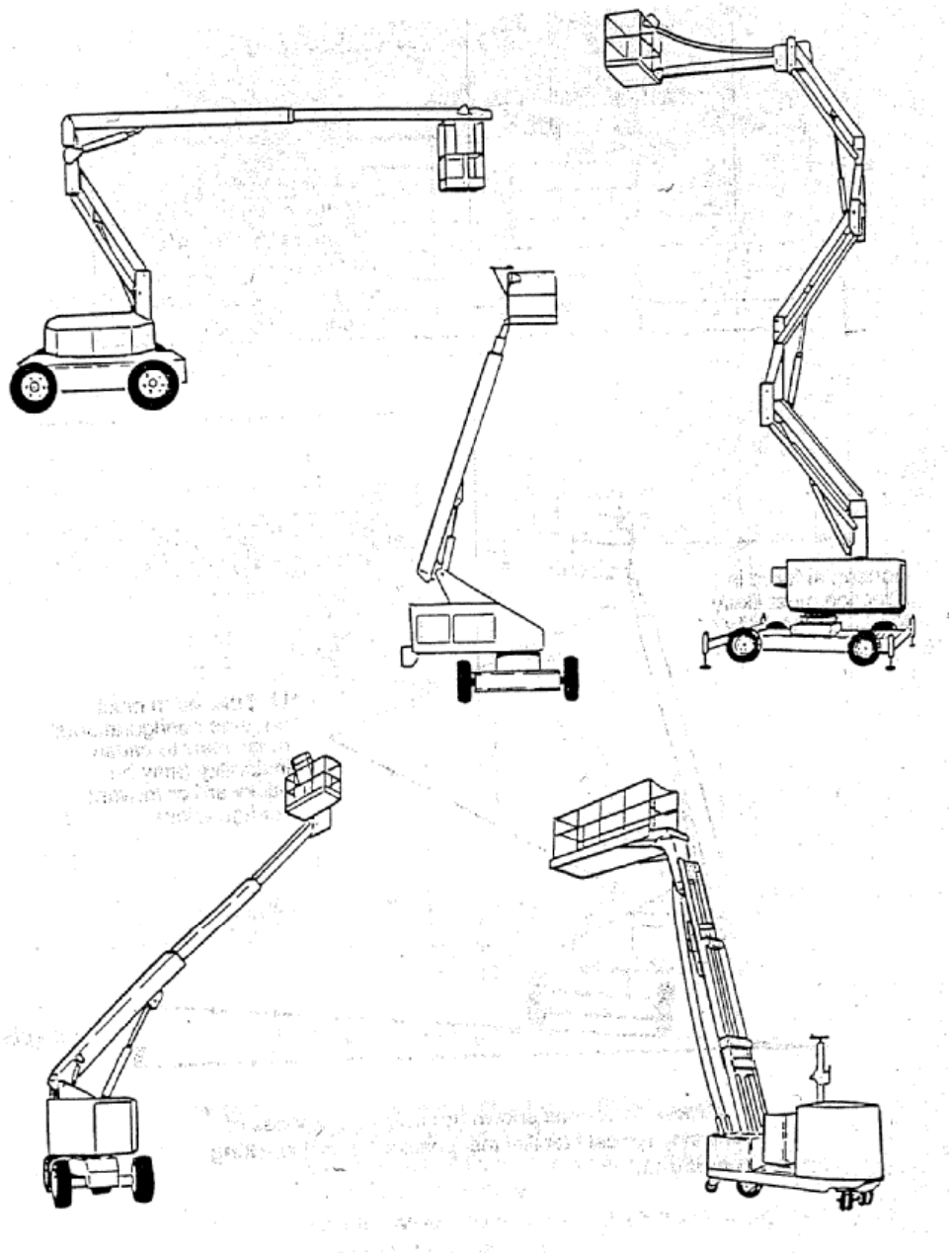

FIGURE L-3 (CONTINUED)

PLATFORMS

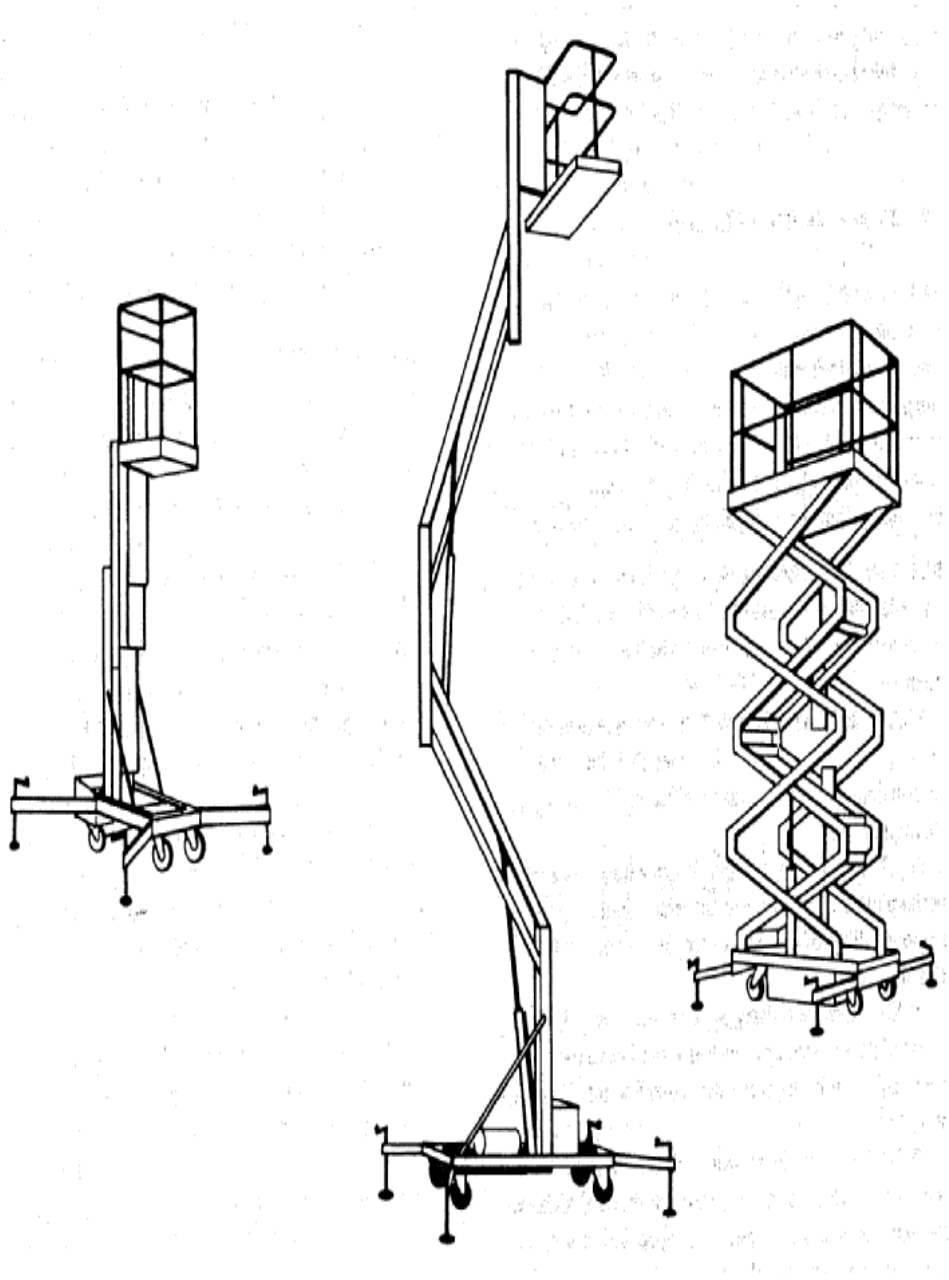

FIGURE L-3 (CONTINUED)

PLATFORMS

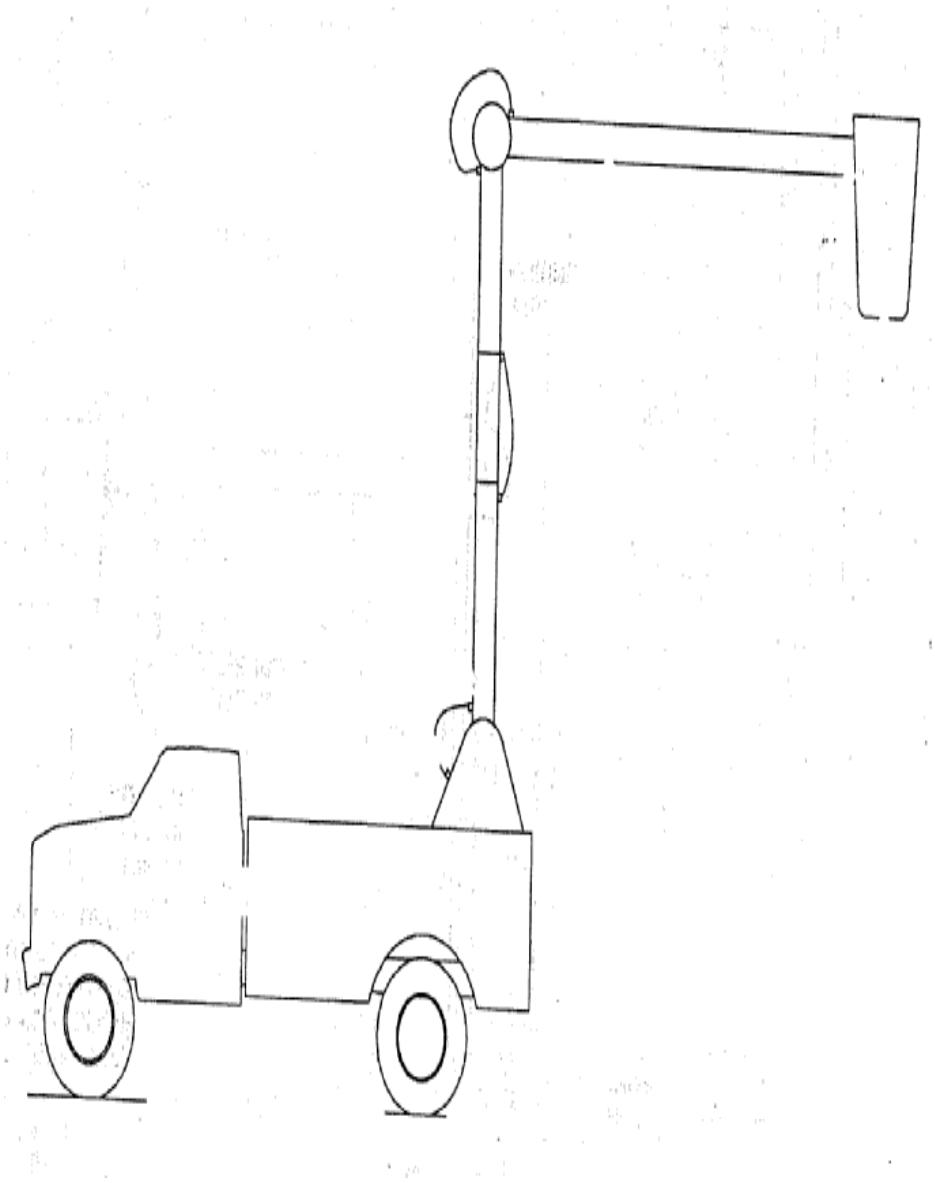

FIGURE L-3 (CONTINUED)

PLATFORMS

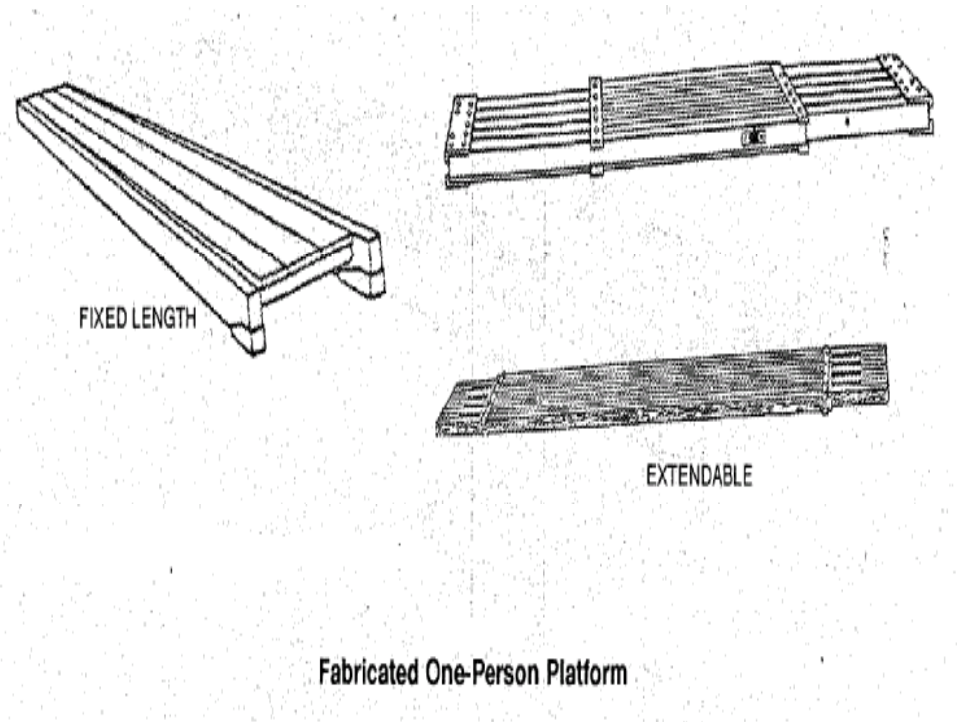

APPENDIX M

USACE PROCESS FOR REQUESTING INTERPRETATIONS

The following process will be used for requesting an official interpretation of the requirements contained in this manual: (Other DOD Components must submit their requests for interpretations through their chain of command.)

1. All requests and responses shall be in writing.

2. The requestor must specifically identify the requirement for which they seek an interpretation. The requestor must provide the exact citation and quote the requirement in question. A separate request must be made for each requirement.

3. The requestor must state their source of confusion regarding the requirement.

4. The requestor must provide the evaluator with all the information necessary to understand the context in which the requirement is being applied.

5. The requestor must provide their interpretation of the requirement and their rationale.

6. Every effort should be made to interpret a requirement at the lowest possible level. The requestor must first seek an interpretation from the immediate next level prior to requesting interpretation from higher echelons. For example, a Contractor must first seek an interpretation of a requirement from the field office under which they work. If they are not satisfied with that interpretation, they may request, in writing, that an interpretation be sought at the local Safety and Occupational Health Office level. Both the Contractor's and the field office's interpretation of the requirement and their rationales and supporting information shall be forwarded to the Safety Office. The local Safety Office must then

render a written interpretation of the requirement within 5 working days of receipt. If either the field office or the requestor is not satisfied with the response from the local Safety Office, either may appeal their position in writing to the Regional/Division Safety and Occupational Health Office. In that case, the entire package containing the requestor's, the field offices, and the local Safety Office's interpretations, rationales, and supporting information shall be sent to the Division Safety Office. The Division Safety Office shall render a written response to the local Safety Office within 10 working days of receipt. If the requestor, the field office, or local Safety Office is not satisfied with the Division Safety Office response, any of them may appeal it to the HQ USACE Safety and Occupational Health Office for final resolution. In that case, all of the information sent to the Division Safety Office and the interpretation, rationale, and supporting information provided by the Division Safety Office shall be sent to the HQ USACE Safety Office. Within 30 working days of receipt, the HQ USACE Safety Office will provide a final written interpretation to the Division Safety Office for dissemination.

7. Interpretations apply ONLY to the specific time and the context in which the requirement is being applied. They may not be used as precedents to determine future applications of the requirement. HQ USACE will make the proper notifications if an interpretation may be applied globally.

8. Unofficial requests for interpretations/clarifications of requirements from USACE Safety and Occupational Health Offices may be made via email or telephone. However, the answers provided via this mode will be considered general guidance, not official interpretations.

9. HQ USACE will NOT accept requests for official interpretations from parties outside the Corps of Engineers structure.

APPENDIX N

USACE PROCESS FOR REQUESTING WAIVERS/VARIANCES

The following process shall be used for requesting waiver(s)/variance(s) from the requirements in this manual: (Other DOD Components must submit their requests for interpretations through their chain of command.)

1. All requests and responses shall be in writing.

2. The requestor must specifically identify the requirement from which he/she seeks relief. The requester must provide the exact citation and quote the requirement in question. A separate request must be made for each requirement.

3. The requestor must state whether he/she seeks a waiver (total elimination of the requirement) or a variance (retaining the basic requirement, but doing it differently).

4. The requester must state in detail why it is not possible or practical to comply with the requirement.

5. It is incumbent on the requestor to provide the evaluator with all the information (maps, drawings, references, calculations, change analysis or impact, etc.) necessary to make a decision. The burden of proof rests with the requestor. Failure to provide the necessary information could be justification for denying the request. It is not up to the evaluator to defend the requirement being questioned. It is up to the requestor to make his/her cause why it should be waived or a variance granted.

6. The requestor must state the specific period of time and specific operation for which the request is being made. Waivers/variances will be granted for specific times and operations and may not be used as a defense for failure to comply with a requirement at another time or on another project. Waivers/variances are granted for specific times and operations and may not be carried over to other operations unless the evaluator extends the scope to include other times and operations. If warranted, HQ USACE may issue a global variance based on an individual request.

7. The requestor must explain how the method he/she plans to use in lieu of the requirement provides protection equal to or greater than the requirement being challenged. Again, the burden of proof rests with the requestor.

8. The requestor must provide a detailed AHA addressing the new procedure. Risk assessment should be a part of the AHA process.

9. It is incumbent on the requestor to research the literature to determine if there is an OSHA or other legal standard addressing the requirement from which he/she is seeking relief. If there is another standard(s), then the requestor must identify it and provide a copy of the approved request for waiver/variance from that organization (i.e., OSHA). Requests for waivers/variances will not be processed until this requirement has been met.

10. Once the requestor has developed his/her waiver/variance package, he/she should send it along with a cover letter up through the USACE chain of command to the authority having jurisdiction to make the decision. Each echelon should evaluate the request and provide their written rationale for concurring or non-concurring with the request. The person responsible for making that determination at each level must sign-off on the request.

11. HQ USACE shall have at least 30 days to consider the request and to render a written decision to the next lower echelon.

APPENDIX O

MANNING LEVELS FOR DIVE TEAMS

NOTE: Manning level tables shown are minimum. Actual manning levels may increase, as determined by the DDC, after considering the diving support systems, the task at hand, weather conditions, dive platform and location, and other factors. Team members may rotate through the dive team positions as long as the minimum manning levels are maintained and team members are qualified/ accepted for the position.

1. SCUBA - Untethered, 0 to 100 ft (0 to 30.5 m)

Untethered SCUBA divers shall always be accompanied by another diver in continuous visual contact.

When depth of dive is 0-100 ft (0-30.5 m), the minimum dive team will be composed as shown in Table 0-1:

TABLE O-1

DIVE TEAM COMPOSITION
SCUBA - Untethered, 0 to 100 ft (0 to 30.5 m)

Personnel	Number
Diving Supervisor	1
Divers (in visual contact)	2
Standby Diver*	1
TOTAL TEAM	4

2. SCUBA – Tethered with communications, 0 to 100 ft (0 to 30.5 m)

When depth of the dive is 0-100 ft (0-30.5 m), the minimum dive team will be composed as shown in Table O-2:

TABLE O-2

DIVE TEAM COMPOSITION
SCUBA – Tethered with communications,
0 to 100 ft (0 to 30.5 m)

Personnel	Number
Diving Supervisor	1
Diver in water	1
Standby Diver* (tethered with communications)	1
Tender	1
TOTAL TEAM	4

3. SURFACE SUPPLIED AIR - 0 to 100 ft

When surface supplied air is being used as the diving mode, the minimum dive team will be composed as shown in Table O-3:

TABLE O-3

DIVE TEAM COMPOSITION
Surface Supplied Air, 0 to 100 ft (0 to 30.5 m)

Personnel	Number
Diving Supervisor	1
Diver	1
Standby Diver*	1
Tender	1
TOTAL TEAM	4

4. SURFACE SUPPLIED AIR - 101 to 190 ft (30.8 to 57.9 m)

When surface supplied air is being used as the diving mode, the minimum dive team will be composed as shown in Table O-4:

TABLE O-4

DIVE TEAM COMPOSITION
Surface Supplied Air, 101 to 190 ft (30.8 to 57.9 m)

Personnel	Number
Diving Supervisor	1
Communication/Console Operator	1
Diver	1
Standby Diver*	1
Tender	1
Standby Diver Tender	1
TOTAL TEAM	6

5. SURFACE SUPPLIED MIXED GAS DIVING

For surface supplied mixed gas diving, the minimum dive team will be composed as shown in Table O-5:

TABLE O-5

DIVE TEAM COMPOSITION
Surface Supplied Mixed Gas Diving

Personnel	Number
Diving Supervisor	1
Diver	1
Standby Diver*	1
Tender	2
Life support technician**	1
TOTAL TEAM	6

* The standby diver will be rested and capable of performing emergency rescue assistance. The standby diver shall be sufficiently free of residual nitrogen to allow for 25 minutes of bottom time at the working depth without exceeding "No Decompression Limits."

** The life support technician will serve as the qualified chamber technician.

APPENDIX P

RECOMMENDED SAFE PRACTICES FOR TREE MAINTENANCE AND REMOVAL OPERATIONS

These recommended safe practices are in addition to the required safe practices contained in Section 31.

1. TREE CLIMBING

a. The climber should not trust the capability of a dead branch to support his/her weight. If possible, dead branches should be broken off on the way up and hands and feet should be placed on separate limbs.

b. A worker should never shin a tree for a distance greater than 15 ft (4.6 m) or shin for any distance beyond his/her demonstrated physical abilities. When the climbing distance is greater than 25 ft (7.6 m) or is beyond the worker's physical capability, the worker should not climb or footlock the rope but should use a safety saddle or sling.

c. The climbing rope should be passed around the trunk of the tree as high above the ground as possible using branches with a wide crotch to prevent any binding of the safety rope. *Exception: Palms and other trees with similar growth characteristics that will not allow a climbing rope to move freely.* The crotch selected for tying should be directly above the work area, or as close to such a position as possible, but located in such a way that a slip of fall would swing the worker away from any electrical conductor. The rope should be passed around the main leader or an upright branch, using the limb as a stop. Feet, hands, and ropes should be kept out of tight V-shaped crotches.

d. While climbing, the location of all electrical conductors should be noted and the worker should climb on the side of the tree that is away from electrical conductors, if possible.

e. A figure-eight knot should be tied in the end of the rope, particularly when climbing high trees, to prevent pulling the rope accidentally through the taut-line hitch and possibly falling.

2. PRUNING AND TRIMMING

a. A scabbard or sheath should be hooked to the belt or safety saddle to carry a handsaw when not in use.

b. A separate line should be attached to limbs that cannot be dropped safely or are too heavy to be controlled by hand. The line should be held by workers on the ground end of the rope. Use of the same crotch for both the safety rope and the work rope should be avoided.

c. Cut branches should not be left in trees overnight.

d. A service line should be put up for operations lasting overnight or longer and should be used to bring the climbing rope back into position at the start of the next day's work.

3. CABLING

a. Branches that are to be cabled should be brought together to the proper distance by means of a block and tackle, a hand winch, a rope, or a rope with a come-along.

b. Not more than two persons should be in a tree working at opposite ends during cabling installation.

c. When the block and tackle are released, workers in trees should be positioned off to one side in order to avoid injury in case the lag hooks pull out under the strain.

d. Groundmen should not stand under the tree when cable is being installed.

4. TOPPING/LOWERING LIMBS

a. Workers performing topping operations should make sure the trees can stand the strain of a topping procedures; if not, some other means of lowering the branches should be used.

b. If large limbs are lowered in sections, the worker in the tree should be above the limb being lowered.

APPENDIX Q

DEFINITIONS

This appendix defines the following terms for the purposes of this manual.

Abrasive blasting: the forcible application of an abrasive to a surface by pneumatic pressure, hydraulic pressure, or centrifugal force.

Abrasive wheel: a cutting tool made of abrasive grains held together by organic (such as resin, rubber, or shellac) or inorganic (such as clay, glass, porcelain, sodium silicate, magnesium oxy-chloride, or metal) bonds.

Absorbed dose: energy imparted to matter by ionizing radiation per unit mass of irradiated material at the place of interest in that material. The units of absorbed dose are the rad or the Gray (1 Gray equals 1 Joule/Kilogram equals 100 rad).

Accepted/Acceptable: a term denoting when a written procedure, practice, method, program, engineering design, or employee qualification criteria submittal, which, after a cursory review by a GDA, is determined to generally conform to safety and health or contractual requirements. Acceptance or acceptability of such submittals in no way relieves the submitting entity from ensuring employees a safe and healthful work environment or complying with all contractual requirements and good engineering practices.

Accident: an unplanned event that results in injury, illness, death, property damage, mission interruption, or other loss that has a negative effect on the mission.

Accident prevention plan (APP): a document that outlines occupational safety and health policy, responsibilities, and program requirements.

Accident, recordable: any accident meeting the definition of an Army accident that involves a Government employee, Contractor, or member of the public that rises to the severity level that they are used to calculate accident experience rates.

Accident, reportable: all USACE and Contractor accidents including occupational illnesses, injuries, and property damage.

Accredited testing laboratory: a laboratory that an accrediting organization has determined has demonstrated the ability to conduct air quality testing according to their standard.

Activity hazard analysis (AHA): a documented process by which the steps (procedures) required to accomplish a work activity are outlined, the actual or potential hazards of each step are identified, and measures for the elimination or control of those hazards are developed.

Aerial lift: include the following vehicle-mounted aerial devices used to elevate personnel to job sites above the ground: aerial ladder, extensible boom platform, articulating boom platform, vertical tower, and a combination of these devices.

Affected employee: a person whose position requires him/her to operate or use a system that is under lockout or tagout or whose position requires him/her to work in an area where a system that is under lockout or tagout is being serviced or maintained.

Air-purifying respirator: a respirator with an air-purifying filter, cartridge, or canister that removes specific air contaminants by passing ambient air through the air-purifying element.

Air receiver: a tank used for the storage of air discharged from the compressor; used to help eliminate pressure pulsations in the discharge line.

All-terrain vehicle (ATV), Class I: a motorized off-highway vehicle, 50 in (127 cm) or less in width, having dry weight of 800 lbs (362.9 kg) or less, and traveling on three or more low pressure tires

(10 lbs (4.5 kg) psi or less), with a seat designed to be straddled by the operator.

All-terrain vehicle (ATV), Class I, Category G: an ATV intended for general recreational and utility use.

All-terrain vehicle (ATV), Class I, Category U: an ATV intended primarily for utility use.

All-terrain vehicle (ATV), Class II: a motorized off-highway vehicle with a width which exceeds 50 in (127 cm) or having a dry weight that exceeds 800 lbs (362.9 kg), traveling on four or more low-profile, low-pressure tires (10 lbs (4.5 kg) psi or less) and having a bench seat.

Aloft: at a height of 6 ft (1.8 m) or more above the ground.

Altered: any change to the original manufacturer's design configuration. These are:

a. Replacement of weight-handling equipment parts and components with parts or components not identical with the original (i.e., change in material, dimensions, or design configuration);

b. The addition of parts or components not previously a part of the equipment;

c. The removal of components that were previously a part of the load handling equipment; and

d. Rearrangement of original parts or components.

Anchor handling barge: a floating work platform consisting of a pontoon or barge, hoisting equipment, and a fixed A-frame that cannot slew or change radius. An anchor barge is used to extract anchors or buoy weights imbedded in the earth. The load is often unknown and is often not under the tip of the A-frame.

Anchorage: a secure point of attachment for lifelines, lanyards, deceleration devices, or tiebacks.

Anchored bridging: the steel joist bridging is connected to a bridging terminus point.

Anti-runaway: a safety device to stop a declining conveyor in case of mechanical or electrical failure.

Anti-two blocking (A2B) (upper limit) device: a device that is activated by two-blocking and disengages the particular function whose movement is caused by the two-blocking.

Approach-departure clearance surface: an extension of the primary surface and the clear zone at each end of the runway, first along an inclined plane (glide angle) and then along a horizontal plane, both flaring symmetrically about the runway centerline extended.

Approach-departure clearance zone: the ground area under the approach-departure clearance surface.

Apron conveyor: a conveyor in which a series of apron pans forms a moving bed.

Apron pans: one of a series of overlapping or interlocking plates or shapes that, together with others, form the conveyor bed.

Approved: a method, equipment, procedure, practice, tool, etc., that is sanctioned, confirmed, as acceptable for a particular use or purpose by a person or organization authorized to render such approval or judgment.

Arc: a controlled electrical discharge between the electrode and the work piece that is formed and sustained by a gas that has been heated to such a temperature that it can conduct electric current.

Arc cutting: a thermal cutting process that severs or removes metal by melting with the heat of an arc between an electrode and the work piece.

Arc welding: a welding process that joins work pieces by heating them with an arc.

Articulating boom crane: a crane with a boom that has sections that are articulated by hydraulic cylinders. The boom may have a telescoping section. The crane can be stationary or mounted on a vehicle, track, locomotive, etc., and is used to lift, swing, and lower loads.

Assigned protection factor (APF): the minimum anticipated protection provided by a properly functioning respirator or class of respirators to a given percentage of properly fitted and trained users.

Associate Safety Professional (ASP): an individual who is currently certified by the Board of Certified Safety Professionals (BCSP).

Atmosphere-supplying respirator: a respirator that supplies the respirator user with breathing air from a source independent of the ambient atmosphere, and includes SARs and SCBA units.

Attendant (confined space): an individual stationed outside one or more permit spaces who monitors the authorized entrants and who performs all attendant's duties assigned in the employer's permit space program.

Authorized employee: a qualified person who is designated, in writing by the designated authority, to request, receive, implement, and remove energy control procedures.

Authorized entrant (confined space): an employee who is authorized by the employer to enter a permit space.

Automatic circuit re-closer: a self-controlled device for automatically interrupting and re-closing an alternate current circuit with a predetermined sequence of opening and re-closing followed by resetting, hold closed, or lockout operation.

Automatic fire detection device: a device designed to automatically detect the presence of fire by heat, flame, light, smoke, or other products of combustion.

Automatic trap: a device for removing moisture from compressed gas systems.

Back cut: the final cut in a felling operation, made horizontally on the opposite side from the undercut. ***> See definition of notch.***

Backstop: a device to prevent reversal of a loaded conveyor under action of gravity when forward travel is interrupted.

Barricade: a physical obstruction, such as tape, screens, or cones, intended to warn of and limit access to a hazardous area.

Barrier: a physical obstruction that is intended to prevent contact with energized lines or equipment.

Beam platform: a work platform made up of wood beams (oriented vertically).

Bearer: a horizontal member of a scaffold upon which the platform rests and that may be supported by runners.

Bell: an enclosed compartment, pressurized (closed bell) or un-pressurized (open bell), which allows the diver to be transported to and from the underwater work area and which may be used as a temporary refuge during diving operations.

Benching: a method of protecting employees from cave-ins by cutting the sides of the excavation in the arrangement of one or

more horizontal levels, usually with vertical or near-vertical walls between steps.

Bending moment: the overturning effect at a point which is the product of a force and the distance from the point from which the force is applied.

Blast area: the area in which explosive loading and blasting activities are being conducted and the area immediately adjacent that is within the influence of fly-rock and concussion.

Blast site: the area in which explosive materials are being loaded, or have been loaded, including all holes to be loaded for the same blast for a distance of 50 ft (15.2 m) on all sides.

Blaster: the person(s) authorized to use explosives for blasting purposes.

Blasting agent: any material or mixture, consisting of a fuel and oxidizer, intended for blasting, not otherwise classified as an explosive, and in which none of the ingredients is classified as an explosive, provided that the finished product, as mixed and packaged for use or shipment, cannot be detonated by means of a No. 8 blasting cap when unconfined.

Blasting machine: a device used to supply initiation current to blasting circuits.

Boatswain's chair: a suspended seat designed to accommodate one worker.

Boatswain's stand: a suspended stand designed to accommodate one worker in a standing position.

Body belt: a strap with means for securing about the waist and is used for positioning, restraint, or ladder climbing only. Body belts may not be used for fall arrest.

Body harness, full: straps that are secured about a body in a manner that distributes the arresting forces over at least the thighs, waist, chest, shoulders, and pelvis, with provision for attaching a lanyard, lifeline, or deceleration device.

Bolted diagonal bridging: diagonal bridging that is bolted to a steel joist or joists.

Bond: an electrical connection from one conductive element to another to minimize potential differences or providing suitable conductivity for fault current or for mitigation of leakage current and electrolytic action.

Bonding: the permanent joining of metallic parts to form an electrically conductive path that will ensure electrical continuity and capacity to conduct safely any current likely to be imposed.

Bonding jumper: a reliable conductor to ensure the required electrical conductivity between metal parts required to be electrically connected.

Boom: a member hinged to the superstructure or a crane/derrick and used for supporting hoisting tackle.

Boom-angle: the angle above or below the horizontal of the longitudinal axis of the base of the boom section.

Boom-angle indicator: a device that measures the angle of the boom to the horizontal.

Boom hoist mechanism: means for supporting the boom and controlling boom angle.

Boom, live: a boom in which lowering (free-fall) is controlled by a brake without aid from other lowering retarding devices.

Boom stop (crane): a device used to limit the angle of the boom at the highest position.

Bottom time: the total elapsed time, measured in minutes, from the time when the diver leaves the surface in descent to the time that the diver begins ascent.

Braided sling: a sling made from braided rope.

Branch circuit: the circuit conductors between the final over current device protecting the circuit and the outlet(s).

Brazing: a welding process that joins materials by heating them to a temperature that will not melt them but will melt a filler material which adheres to them and forms a joint.

Bricklayers' square scaffold: a scaffold made up of a work platform (planking) supported on bricklayers' squares.

Bridge: that part of a gantry or overhead crane that carries the trolley(s).

Bridging clip: a device that is attached to the steel joist to allow the bolting of the bridging to the steel joist.

Bridging terminus point: a wall, a beam, tandem joists (with all bridging installed and a horizontal truss in the plane of the top chord) or other element at an end or intermediate point(s) of a line of bridging that provides an anchor point for the steel joist bridging.

Bridle sling: multiple-leg-sling; the legs of the sling are spread to distribute the load.

Bucket conveyor: any type of conveyor in which the material is carried in a series of buckets.

Bucking: the act of sawing a felled tree or limbs into smaller sections.

Bus wire: an expendable wire used in parallel or series-in-parallel circuits to which are connected the leg wires of electric blasting caps.

Bushing: an insulating device or lining used to protect a conductor where it passes through an aperture.

Cable: a conductor with insulation, or a stranded conductor with or without insulation and other coverings (single-conductor cable), or a combination of conductors insulated from one another (multiple-conductor cable).

Cable laid endless sling: mechanical joint: a wire rope sling made from one continuous length of cable laid rope with the ends joined by one or more metallic fittings.

Cable laid grommet, hand tucked: an endless wire rope sling made from one continuous length of rope formed to make a body composed of six ropes around a rope core. The rope ends are tucked into the body, forming the core. No sleeves are used.

Cable laid rope: a rope composed of several wire ropes laid as strands around a wire rope core.

Cable laid rope sling, mechanical joint: a wire rope sling made from a cable laid wire rope with eyes fabricated by pressing or swaging metal sleeves over the rope junction.

Cable sheath: a protective covering applied to cables.

Caisson: a watertight chamber (of wood or steel sheeting or a concrete or steel cylinder) used in construction work underwater or as a foundation. When the bottom of the structure extends below the surface of free water, excavation is performed by workers in a working chamber at an air pressure greater than atmospheric pressure.

Calyx hole: a hole, typically 30 in (76.2 cm) in diameter or larger, drilled into the earth primarily for subsurface exploration.

Canister or cartridge: a container with a filter, sorbent, or catalyst, or combination of these items, which removes specific contaminants from the air passed through the container.

Capstan: a spool-shaped revolving drum, manually or power-operated, used for heaving in of heavy mooring lines.

Car-arresting device: a device that will stop and hold the car with its rated load in the event of the failure of the wire rope, rack, pinion or other car suspension means.

Carbon dioxide (CO_2): a colorless, odorless, electrically nonconductive inert gas which acts as an extinguishing medium by reducing the concentration of oxygen or fuel vapor in the air to the point where combustion is impossible.

Carpenter's bracket scaffold: a scaffold made up of a work platform supported on wood or metal brackets.

Catch platform: a temporary structure erected around, attached to and abutting the building being demolished for the purpose of safeguarding and protecting the employees and the public by catching and retaining falling objects or debris.

Cathead: a spool shaped attachment on a winch around which rope is wound for hoisting and pulling.

Certified Construction Heath and Safety Technician (CHST): an individual who is currently certified by the BSCP.

Certified Health Physicist (CHP): an individual who is currently certified by the American Board of Health Physics.

Certified Industrial Hygienist (CIH): an individual who is currently certified by the American Board of Industrial Hygiene.

Certified Safety Professional (CSP): an individual who is currently certified by the BCSP.

Certified Safety Trained Supervisor (CSTS): an individual who is currently certified by the BCSP.

Chain conveyor: any type of conveyor in which one or more chains act as the conveying medium.

Choker: a sling used to form a slip noose around an object.

Christmas tree lifting: the tandem lifting of steel (multiple steel members rigged together) by one crane.

Chute: a trough or tube used to guide and transport sliding objects, materials or debris from a higher to a lower level.

Circuit: a conductor or system of conductors through which an electric current is intended to flow.

Circuit breaker: a device designed to open and close a circuit by non-automatic means and to open and close a circuit automatically on a predetermined overcurrent without damage to itself when properly applied within its rating.

Class A fire: a fire involving ordinary combustible materials such as wood, paper, clothing, and some rubber and plastic materials.

Class B fire: a fire involving flammable or combustible liquids, flammable gases, greases and similar materials, and some rubber and plastic materials.

Class C fire: a fire involving energized electrical equipment where safety to the employee requires the use of electrically nonconductive extinguishing media.

Class D fire: a fire involving combustible metals such as magnesium, zirconium, sodium, and potassium.

Cleanout: a hole that is put in the concrete masonry unit block to verify that grout goes all the way to the bottom of the cell of blocks in a wall (filling the void cells). The cleanout being in this position keeps employees from under the scaffolding where they are pumping the grout in overhead.

Cleat: a mooring fitting having two horizontal arms to which mooring lines are secured.

Coarse laid rope: 6 x 7 wire rope (6 strands, 7 wires per strand).

Cofferdam: a temporary structure used to keep water (and earth) out of an excavation during construction of the permanent structure.

Cold forming: the process of using press brakes, rolls, or other methods to shape steel into desired cross sections at room temperature.

Column: a load-carrying vertical member that is part of the primary skeletal framing system. Columns do not include posts.

Combustible liquid: a liquid having a flash point at or above 100 °F (38 °C). Combustible liquids are subdivided as follows:

a. Class II liquids have flash points at or above 100 °F (38 °C) and below 140 °F (60 °C).

b. Class IIIA liquids have flash points at or above 140 °F (60 °C) and below 200 °F (93 °C).

c. Class IIIB liquids have flash points at or above 200 °F (93 °C).

Command: the USACE Major Subordinate Command, District, Laboratory, or Field Operating Activity with responsibility for a particular activity.

Committed dose equivalent: The dose equivalent to organs or tissues of reference that will be received from an intake of radioactive material by a person during the 50-year period following the intake.

Committed effective dose equivalent: the sum of the products of the weighting factors applicable to each of the body organs or tissues irradiated and the committed dose equivalent to these organs or tissues.

Competent person: one who can identify existing and predictable hazards in the working environment or working conditions that are dangerous to personnel and who has authorization to take prompt corrective measures to eliminate them.

Competent person for confined space: A person meeting the competent person requirements defined in Section 1 who is assigned in writing by the GDA to assess confined spaces, to include ship and vessel repair and maintenance at USACE facilities, and who possesses demonstrated knowledge, skill, and ability to:

a. Identify the structure, location, and designation of confined and PRCS where work is done;

b. Calibrate and use testing equipment including, but not limited to, oxygen indicators, combustible gas indicators, CO indicators, and CO_2 indicators, and to interpret accurately the test results of that equipment;

c. Perform all required tests and inspections specified in 29 CFR 1910.146 and 29 CFR 1915, Subpart B;

d. Assess hazardous conditions including atmospheric hazards in confined space and adjacent spaces and specify the necessary protection and precautions to be taken;

e. Determine ventilation requirements for confined space entries and operations,

f. Assess hazards associated with hot work in confined and adjacent space and determine fire watch requirements; and

g. Maintain records required.

Conductor: a material, usually in the form of a wire, cable, or bus bar, suitable for carrying an electric current.

Conductor shielding: an envelope that encloses the conductor of a cable and provides an equipotential surface in contact with the cable insulation.

Confined space: a space that:

a. Is large enough and so configured that a person can bodily enter and perform assigned work; and

b. Has limited or restricted means for entry or exit such that the entrant's ability to escape in an emergency would be hindered (e.g., tanks, vessels, silos, storage bins, hoppers, vaults, and pits are spaces that may have limited means of entry; doorways are not considered a limited means of entry or egress); and

c. Is not designed for continuous worker occupancy.

Connector: an employee who, working with hoisting equipment, is placing and connecting structural members and/or components.

Constructibility: the ability to erect structural steel members in accordance with 29 CFR 1926, Subpart R, without having to alter the over-all structural design.

Construction load: (for joist erection) means any load other than the weight of the employee(s), the joists and the bridging bundle

Container: any vessel of 60 gal (0.23 m^3) or less capacity used for transporting or storing liquids.

Contaminant: any material, that, by nature of its composition or reaction with other materials, is potentially capable of causing injury, death, illness, damage, loss, or pain.

Contractor: any individual or firm under contractual agreement with the government or its subunits for the performance of services and products, such as construction, maintenance, and hazardous waste activities, including subcontractors of a prime contractor.

Controlled decking zone (CDZ): an area in which certain work (e.g., initial installation and placement of metal decking) may take place without the use of guardrail systems, personal fall arrest systems, fall restraint systems, or safety net systems and where access to the zone is controlled.

Controlled load-lowering: lowering a load by means of a mechanical hoist drum device that allows a hoisted load to be lowered with maximum control using the gear train or hydraulic components of the hoist mechanism. Controlled load lowering requires the use of the hoist drive motor, rather than the load hoist brake, to lower the load.

Conveyor: a horizontal, inclined, or vertical device for transporting material in a path predetermined by the design of the device and having points of loading and discharge.

Conveyor, flight: a type of conveyor consisting of one or more endless propelling media, such as chain, to which flights are attached, and a trough through which material is pushed by the flights.

Conveyor, portable: a transportable conveyor that is not self-propelled, usually having supports that provide mobility.

Conveyor, screw: a conveyor screw revolving in a suitably shaped stationary trough or casing fitted with hangers, trough ends, and other auxiliary accessories.

Corrosive: is a substance that can cause destruction of living tissue or damage by chemical action, including acids with a pH of 2.5 or below or caustics with a pH of 11.0 or above.

Crane: a machine for lifting or lowering a load and moving it horizontally, with the hoisting mechanism being an integral part of the machine.

Crane, commercial truck mounted: a crane consisting of a rotating superstructure (center post or turn table), boom, operating machinery, and one or more operator's stations mounted on a frame attached to a commercial truck chassis, usually retaining a payload hauling capability whose power source usually powers the crane.

Crane, crawler: a crane consisting of rotating superstructure with a power plant, operating machinery, and a boom, mounted on a base and equipped with crawler treads for travel.

Crane, floating: a rotating superstructure, power plant, operating machinery, and boom, mounted on a barge or pontoon. The power plant may be installed below decks. The crane's function is to handle loads at various radii.

Crane, floor operated: a crane that is pendant or nonconductive rope controlled by an operator on the floor or an independent platform

Crane, gantry: a crane similar to an overhead crane except that the bridge is rigidly supported on two or more legs running on fixed rails or other runway.

Crane, hammerhead: a lifting machine arranged with a tower (mast), an upper structure that rotates, a horizontally-extended load jib (boom) with trolley, and a counterweight jib extending in the direction opposite of the load jib: neither jib are arranged for luffing.

The trolley on the load jib traverses the length of the jib and contains the sheaves and accessory parts which make up the upper load block; the lower load block is suspended from the trolley.

Crane, locomotive: a crane mounted on a base or car equipped for travel on a railroad track.

Crane, luffing jib: a type of jib on a tower crane that is pivoted at the jib foot and supported by luffing cables. The hoist rope usually passes over a sheave at the jib point and the hook radius is changed by luffing, or changing the angle of inclination, of the jib. Rear pivoted luffing jibs are similar but the pivot is towards the rear of the top of the tower rather than at the jib foot.

Crane, mobile: a crane mounted on a truck or crawler.

Crane, overhead: a crane with a single- or multiple-girder movable bridge or fixed hoisting mechanism and traveling on an overhead fixed runway structure.

Crane, pillar: a fixed crane consisting of a vertical member, held in position at its base to resist overturning moment, and normally with a constant-radius revolving boom supported at the outer end by a tension member.

Crane, portal: a crane consisting of a rotating superstructure with operating machinery and boom, all of which is mounted on gantry structure, usually with a portal opening between the gantry columns or legs for traffic to pass through; may be fixed or traveling.

Crane, standby: a crane that is not in regular service but which is used occasionally or intermittently as required.

Crane, tower: similar to a portal crane but with a tower intervening between the upper structure and the gantry or other base structure; typically without a portal. To resist overturning moments, the assembly may be ballasted, fixed to a foundation, or a combination of both. The crane may be either fixed or on a traveling base.

Crane (hoist), under-hung: a crane that is suspended from the bottom flange of a runway track or a single-track monorail system.

Crane, wall: a crane having a jib with or without trolley and supported from a side wall or line of columns of a building. It is a traveling type and operates on a runway attached to the sidewall or columns.

Crane, wheel-mounted (multi-control stations): a crane consisting of a rotating superstructure, operating machinery, and operator's station and boom, mounted on a crane carrier equipped with axles and rubber-tired wheels for travel, a power source(s), and having separate stations for driving and operating.

Crane, wheel-mounted (single control station): a crane consisting of a rotating superstructure, operating machinery, and boom, mounted on a crane carrier equipped with axles and rubber-tired wheels for travel, a power source, and having a single control station.

Crane operator aids: devices that are used to assist a crane operator in the safe operation of the crane, including: two-block warning devices, two-block prevention devices, load and load moment indicator devices, boom angle and radius indicators, boom and jib stops, boom hoist disengaging devices, limit switches, drum rotation indicators, etc.

Cribbing: a system of timbers, arranged in a rectangular pattern, used to support and distribute the weight of equipment.

Critical lift: a non-routine crane lift requiring detail planning and additional or unusual safety precautions. Critical lifts include lifts made when the load weight is 75% of the rated capacity of the crane; lifts that require the load will be lifted, swung, or placed out of the operator's view of lifts made with more than one crane; lifts using more than one hoist; lifts involving non-routine or technically difficult rigging arrangement; hoisting personnel with a crane or derrick; lifts involving hazardous materials (e.g., explosives, highly volatile substances); lifts involving submerged loads; lifts without

the use of outriggers using on-rubber tire load charts; lifts where the center of gravity could change; or any lift that the lift or crane operator believes should be considered critical.

Crossbraces: two diagonal scaffold members joined at their center to form an "X", used between frames or uprights or both.

Crotch: to pass a rope through the crotch of a limb, or false crotch, in such a way that the load will be supported by the main leader.

Cumulative trauma disorders: disorders of muscles, tendons, peripheral nerves, or vascular system. These can be caused, precipitated, or aggravated by intense, repeated, or sustained exertions, motions of the body, insufficient recovery, vibration, or cold.

Current-carrying part: a conducting part intended to be connected in an electric circuit to a source of voltage; non-current-carrying parts are those not intended to be so connected.

Cylinder manifold: a multiple header for interconnection of gas sources with distribution points.

Damp location: partially protected locations under canopies, marquees, roofed open porches, and like locations, and interior locations subject to moderate degrees of moisture such as some basements and some cold-storage warehouses.

Deadman control: a constant-pressure, hand- or foot-operated control designed so that when released, it automatically returns to a neutral or deactivated position.

Debris net: a net designed to catch only debris. It must be used in conjunction with a personnel net if there is any possibility for personnel to fall.

Decelerating device: any mechanism that serves to dissipate energy during a fall.

Decibel (dB): a measure of sound pressure.

dB(A): A-weighted measure of sound pressure used with sound level meters; the weighting causes the sensitivity of the sound level meter to vary with the frequency and intensity of sound and in doing so duplicates the response of the human ear.

Decking hole: a gap or void more than 2 in (5.1 cm) in its least dimension and less than 12 in (30.5 cm) in its greatest dimension in a floor, roof, or other walking/working surface. Pre-engineered holes in cellular decking (for wires, cables, etc.) are not included in this definition.

Decompression sickness: a condition with a variety of symptoms which may result from gas or bubbles in the tissues of divers after pressure reduction.

Decompression table: a profile or set of profiles of depth-time relationships for ascent rate and breathing mixtures to be followed after a specific depth-time exposure or exposures.

Demand respirator: an atmosphere-supplying respirator that admits breathing air to the facepiece only when a negative pressure is created inside the facepiece by inhalation.

Derrick: an apparatus consisting of a mast or equivalent member held at the end by guys or braces, with or without a boom, for use with a hoisting mechanism and operating ropes.

Derrick, A-frame: a derrick in which the boom is hinged from a cross member or pedestal between the bottom ends of two upright members spread apart at the lower ends and joined at the top, the boom point secured to the junction of the side members, and the side members are braced or guyed from this junction point.

Derrick, floating: a mast or equivalent member held at the head by guys or braces, with or without a boom, for use with a hoisting mechanism and operating ropes, mounted on a barge or a pontoon. The power plant may be installed below decks.

Derrick, floor: an elevated floor of a building or structure that has been designated to receive hoisted pieces of steel prior to final placement.

Derrick, guy: a fixed derrick consisting of a vertical mast capable of being rotated 360° (but not continuous rotation) supported by guys, and a boom that is pivoted at the bottom and capable of moving in a vertical plane; a reeved rope between the head (top) of the mast and the boom harness (at the boom point) allows lifting and lowering of the boom and a reeved rope from the boom point allows lifting and lowering of the load.

Derrick, stiff leg: a derrick similar to a guy derrick except that the mast is supported or held in place by 2 or more stiff members (stiff legs) which are capable of resisting either tensile or compressive forces. Sills are generally provided to connect the lower ends of the stiff legs to the foot of the mast.

Design load: the maximum intended load: that is, the total of all loads including the worker(s), material, and the equipment placed on the unit.

Designated person: An employee who has been trained or is qualified and assigned the responsibility to perform a specific task.

Detonating cord: a flexible cord containing a center core of high explosives that when detonated will have sufficient strength to detonate other cap-sensitive explosives with which it is in contact.

Detonator: blasting caps, electric blasting caps, delay electric blasting caps, and non-electric delay blasting caps.

District/Lab Diving Coordinator (DDC): a USACE employee assigned the responsibility for organizing, integrating, and monitoring the total dive program within a USACE Command. This individual and an alternate (to perform in the absence of the primary DDC) will be appointed, in writing, by the USACE Commander/Director and will assure adherence to all applicable rules and regulations. At the Major Subordinate Command (MSC)

(Division), the Diving Coordinator will provide program guidance and monitor and annually review the MSC dive program at all subordinate levels; at the District, Laboratory, and field operating activities (FOA) level, the DDC will review and accept all safe practices manuals, dive plans, medical certificates, and dive team qualifications and experience to assure compliance with this manual. The DDC and the alternate shall, as a minimum, successfully complete the HQUSACE approved Diving Safety or Diving Supervisor Training Course and shall maintain certification by attending the diving refresher course every 4 years. DDCs attending the Diving Safety Course are not required to perform 12 working/training dives unless they are in a dual position as a USACE diver or USACE Diving Supervisor.

Dive location: a surface or vessel from which a diving operation is conducted.

Dive operation: the complete scope of work addressed in a single diving plan.

Dive team: divers and support employees involved in a diving operation, including the diving supervisor.

Dive tender: that individual on the dive team assigned to assist the diver with dressing in and out, entering and exiting the water, and continuously tend the tether or umbilical of the diver while in the water. The dive tender shall have experience and training that encompasses all aspects of tending in order to provide safe and efficient support to the diver.

Diving inspector: a USACE employee who inspects a Contractor's diving operations while work is in progress. Diving inspectors shall be designated in writing by the USACE Commander upon nomination by the employee's staff level supervisor and with concurrence of the UDC. Diving inspectors must have successfully completed a USACE diving safety, diving supervisor, or diving inspector course and shall maintain certification by attending a HQUSACE-sponsored diving inspectors course every 4 years.

Diving supervisor: the employer, or an employee designated by the employer, at the dive location in charge of all aspects of the diving operation that affect the safety and health of dive team members. The diving supervisor shall have experience and training in the conduct of the assigned diving operation.

Dose equivalent: the product of the absorbed dose in tissue, quality factor, and all other necessary modifying factors at the location of interest. The units of dose equivalent are the rem or Sievert (Sv) (1 Sievert equals 100 rem).

Dosimetry: the measure of radiological exposure.

Double-cleated ladder: a ladder, similar to a single cleat ladder but with a center rail, which allows simultaneous two-way traffic for employees ascending or descending.

Double connection: an attachment method where the connection point is intended for two pieces of steel that share common bolts on either side of a central piece.

Double connection seat: a structural attachment that, during the installation of a double connection, supports the first member while the second member is connected.

Dragline: a bucket attachment for a crane that excavates by the crane drawing, with a cable, the bucket towards itself.

Dredge: any vessel fitted with machinery for the purpose of removing or relocating material from or in a body of water.

Drift pin: a pin that is tapered at both ends and used to align holes.

Drilling fluid (mud): fluid that is pumped into a drilled hole and used to wash cuttings from the hole: drilling mud is a type of drilling fluid made of a slurry of clay and water and that is used to coat and support the sides of the drill hole and seal off permeable strata.

Dry chemical: an extinguishing agent composed of very small particles of chemicals such as sodium bicarbonate, potassium bicarbonate, or potassium chloride supplemented by special treatment to provide resistance to packing and moisture absorption and to provide proper flow capabilities. Does not include dry powders.

Dry location: a location not normally subject to dampness or wetness; a location classified as dry may be temporarily subject to dampness or wetness, as in the case of a building under construction

Dry powder: a compound used to extinguish or control Class D fires.

Dust: solid particles generated by handling, crushing, grinding, or detonation of organic or inorganic materials.

Duty cycle: operations involving repetitive pick and swing, such as with a dragline, grapple, or clamshell: such operations are conducted primarily for production as opposed to placement.

Duty time: time during which an individual is being compensated for his/her services.

Effective dose equivalent: the sum of the products of the dose equivalent to the organ or tissue and the weighting factors applicable to each of the body organs or tissues irradiated.

Effectively grounded: intentionally connected to earth through a ground connection or connections of sufficiently low impedance and having sufficient current-carrying capacity to prevent the buildup of voltages which may result in undue hazard to connected equipment or to persons.

Electric supply lines: those conductors used to transmit electrical energy and the necessary supporting or containing structures.

Electrical equipment: any device that produces, consumes, stores, transmits, or converts electrical energy.

Electrical line: any conductor used in the transmission of electrical energy from one point to another.

Electrode: a flux coated wire rod.

Elevating work platform: a vertically-adjustable, integral chassis, power operated work platforms, which may be horizontally extended or rotated relative to the elevating mechanism; an integral frame boom supported power operated elevating work platforms which either telescope, articulate, rotate, or extend beyond their base dimensions.

Emergency (marine): an unforeseen development that imposes an immediate hazard to the safety of the vessel, the passengers, the crew, the cargo, property, or the marine environment, requiring urgent action to remove or mitigate the hazard.

Emergency situation (respiratory hazard): any occurrence such as, but not limited to, equipment failure, rupture of containers, or failure of control equipment that may or does result in an uncontrolled significant release of an airborne contaminant.

Employee: a Government or Contractor person engaged in work on a USACE project.

Employer: a Government or Contractor organization that has control over employees engaged in work on a USACE project.

Enclosed space: any space, other than a confined space, that is enclosed by bulkheads and overhead. This includes cargo holds, tanks, and quarters, as well as machinery and boiler spaces.

Endless rope: a rope with the ends spliced together.

End-of-service-life indicator (ESLI): a system that warns the respirator user of the approach of the end of adequate respiratory protection (e.g., that the sorbent is approaching saturation or is no longer effective).

Energy control procedure: a written procedure (including responsibilities, procedural steps for lockout and tagout, and requirements for testing the effectiveness of energy control measures) to be used for the control of hazardous energy.

Energy isolation device: a physical device that prevents the transmission or release of energy. Includes, but is not limited to, manually operated circuit breakers, disconnect switches, slide gates, slip blinds, line valves, blocks, or similar devices, capable of blocking or isolating energy, with a position indicator. The term does not include push buttons, selector switches, and other control circuit type devices.

Energy ratio: a measure of the seismic energy impact of an explosive blast.

Energy source: includes electrical, mechanical, hydraulic, pneumatic, chemical, thermal, nuclear, stored, or other energy.

Engulfment: the surrounding and effective capture by a liquid or finely divided (flow able) solid substance that can be aspirated to cause death by filling or plugging the respiratory system or that can exert enough force on the body to cause death by strangulation, constriction, or crushing.

Entry permit (permit): the written or printed document provided to allow and control entry into a permit space and that contains the information specified in ENG Form 5044-R.

Entry supervisor (confined space): the person (such as the employer, foreman, or crew chief) responsible for determining if acceptable entry conditions are present at a permit space where entry is planned, for authorizing entry and overseeing entry operations, and for terminating entry as required by this manual.

Erection bridging: the bolted diagonal bridging that is required to be installed prior to releasing the hoisting cables from the steel joists.

Escape-only respirator: a respirator intended to be used only for emergency exit.

Exceptional-exposure dive: dives in which the risk of decompression sickness, oxygen toxicity, and or exposure to the elements is substantially greater than normal working dives.

Explosives:

a. Any chemical compound, mixture, or device, the primary or common purpose of which is to function by explosion (with substantially instantaneous release of gas and heat), unless such compound, mixture, or device is otherwise specifically classified by DOT; and

b. All material classified as Class A, Class B, or Class C explosive by DOT.

Explosive-actuated tool: a tool that uses the expanding gases from a power load to drive a fastener.

Exposure: a measure of the ionizing radiation produced in air by X or gamma radiation, equal to the sum of the electrical charges on all ions of one sign produced per unit mass of air. The special unit of exposure is the Roentgen equal to 2.58×10^{-4} Coulombs per Kilogram of air at standard temperature and pressure.

Exposure hours: the number of paid duty hours. Unpaid hours count as exposure when employees are quartered on-site. Exposures hours are used to calculate accident experience rates.

Exposure (respiratory hazard): exposure to a concentration of an airborne contaminant that would occur if the employee were not using respiratory protection.

Extension trestle ladder: a ladder consisting of a trestle ladder with an additional vertical single ladder, having parallel sides, that is adjustable perpendicularly and is provided with a device to lock it into place.

Extinguisher classification: the letter classification given an extinguisher to designate the classes of fire on which it will be effective.

Extinguisher rating: the numerical rating given to an extinguisher that indicates the extinguishing potential of the unit.

Face: that part of the tunnel or shaft where excavation is in progress or was last done; the vertical surface at the head of a tunnel excavation.

Fall arrest system: a fall arrest system must be used any time working at an elevated level and exposed to a fall hazard 6 ft (1.8 m) or greater. It consists of an anchorage capable of supporting 5,000 lbs (2268 kg) per attached employee, an anchorage connector, a connecting means such as a shock absorbing lanyard, self-retracting lanyard, and lifeline, and a full body harness.

Fall restraint system: prevents the worker from reaching an area where free fall could occur and consists of an anchor point, anchor connector, full body harness or body belt with back mounted D-ring, and a connecting means (i.e., lanyard).

Fall work positioning system: is designed to hold a worker in place leaving both hands and feet free to work and limits the maximum potential fall to no more than 2 ft (0.6 m). A fall arrest system should be used in conjunction with a work positioning system when the user is at elevated heights. It consists of an anchorage, full body harness or body belt with D-rings for attaching work positioning equipment and connecting means such as carabineer or rebar assembly.

False crotch: a pulley, block, sling, lashing, or metal ring, affixed to a tree's leader of limb, through which a load line is passed, to raise or lower limbs or equipment.

Feeder: all circuit conductors between the service equipment, the source of a separately derived system, or other power supply source and the final branch-circuit over-current device.

Festoon lighting: a string of outdoor lights that is suspended between two points.

Figure-four form scaffold: a scaffold consisting of a work platform supported by brackets designed in the shape of a "4."

Filter or air purifying element: a component used in respirators to remove solid or liquid aerosols from the inspired air.

Filtering facepiece (dust mask): a negative-pressure particulate respirator with a filter as an integral part of the facepiece or with the entire facepiece composed of the filtering medium.

Final interior perimeter: the perimeter of a large permanent open space within a building such as an atrium or courtyard. This does not include openings for stairways, elevator shafts, etc.

Fit factor: a quantitative estimate of the fit of a particular respirator to a specific individual, and typically estimates the ratio of the concentration of a substance in ambient air to its concentration inside the respirator when worn.

Fit test: the use of a protocol to qualitatively or quantitatively evaluate the fit of a respirator on an individual. ***> See Qualitative fit test (QLFT) and Quantitative fit test (QNFT).***

Fixed extinguishing system: a permanently installed system that either extinguishes or controls a fire.

Fixed ladder: a ladder that cannot be readily moved or carried because it is an integral part of a building or structure.

Fixed lead: pile driving leads which are rigidly attached to a boom by horizontal struts extending from the leads to extended boom foot pins, thus providing a fixed triangular frame of boom, struts, and leads.

Flammable liquid: a liquid having a flashpoint below 100° F (38° C) and having a vapor pressure not exceeding 40 lbs per square inch absolute (psia) (280 kPa) at 100° F (38° C). Flammable liquids are also categorized as Class I liquids and further defined as follows:

a. Class 1A liquids have flash points below 73° F (23° C) and have boiling points below 100° F (38° C).

b. Class 1B liquids have flash points below 73° F (23° C) and have boiling points at or above 100° F (38° C).

c. Class 1C liquids have flash points at or above 73° F (23° C) and below 100° F (38° C).

Flashback: a recession of the flame into or back of the mixing chamber of the oxy-fuel gas torch.

Fleet angle: the angle between the rope as it leaves the drum (at the extreme end wrap on a drum) for the sheave and an imaginary centerline passing through the center of the sheave groove and a point halfway between the ends of the drum.

Floating plant: includes floating vessels use to transport personnel, work boats, floating cranes and derricks, barges, patrol boats, etc.

Float/ship scaffold: a scaffold hung from overhead supports by means of ropes and consisting of a unit having diagonal bracing underneath: the scaffold rests upon and is securely fastened to two parallel planks bearers at right angles to the span.

Floor arch: the masonry arch shaped filling between steel floor beams or girders, whatever the type of flooring system.

Floor (roof) hole: a ground, floor, or roof opening measuring less than 12 in (30.5 cm) but more than 1 in (2.5 cm) in its least dimension.

Floor (roof) opening: a ground, floor, or roof opening (includes skylights) measuring 12 in (30.5 cm) or more in its least dimension.

Foam: a stable aggregation of small bubbles that flow freely over a burning liquid surface and form a coherent blanket that seals combustible vapors, thereby extinguishing the fire.

Forklift: a mobile power propelled truck used to carry, push, pull, lift, stack, or tier materials. ***See Powered industrial truck***.

Form scaffold: a scaffolding system integrated to formwork.

Freestanding scaffold: a scaffold that is independent of and not rigidly attached to a structure.

Fuel gas: a gas (e.g., acetylene, hydrogen, natural gas, propane) used with oxygen in the oxy-fuel process and for heating.

Full personnel protection: when a tagout device is used in place of a lockout device, full personnel protection is provided when:

a. The tagout device is attached at the same location as the lockout device would have been attached;

b. All tagout-related requirements of this manual have been complied with; and

c. Additional means have been taken to provide a level of safety commensurate with that of a lockout device. Such additional means include the removal of an isolating circuit element, blocking of a control switch, opening and tagging an

extra (separated by distance) disconnecting device, or the removal of a valve handle to reduce the likelihood of being energized.

Fume: very small suspended solid particles created by condensation from the gaseous state.

Fusible plug: a device designed to relieve pressure and to indicate certain conditions that contribute to low water.

Gangway: any ramp, stairway, or ladder provided for personnel to board/leave a vessel.

Gaseous agent: a fire-extinguishing agent that is in the gaseous state at normal room temperature and pressure and diffuses readily to diffuse itself uniformly throughout an enclosure.

Gas metal arc welding: an arc welding process that uses an arc between a continuous filler metal electrode and the weld pool. Shielding (from the atmosphere) is provided by an externally supplied gas.

Gate: a device or structure by means of which the flow of material may be stopped or regulated.

Generator, mobile: mobile describes equipment, such as vehicle-mounted generators, that is capable of being moved on wheels or rollers.

Generator, portable: portable describes equipment that is easily carried by personnel from one location to another.

Girt (in systems engineered metal buildings): a “Z” or “C” shaped member formed from sheet steel spanning between primary framing and supporting wall material.

Government Designated Authority (GDA): the senior person in charge or his/her appointed representative for the operation being considered.

Grommet: an endless 7-strand wire rope.

Ground: (reference) - that conductive body, usually earth, to which an electric potential is referenced; (as a noun) - a conductive connection whether incidental or accidental, by which an electric circuit or equipment is connected to reference ground; (as a verb) - the connecting or establishing of a connection, whether by intention or accident, of an electric circuit or equipment to reference ground.

Grounded: connected to earth or to some conducting body that serves in place of the earth.

Grounded conductor: a system or circuit conductor that is intentionally grounded.

Grounded system: a system of conductors in which at least one conductor or point (usually the middle wire or neutral point of a transformer or generator windings) is intentionally grounded, either solidly or through a current limiting device (not a current-interrupting device).

Ground fault circuit interrupter: a device used to interrupt the electric circuit to the load when a fault current to ground exceeds some predetermined value that is less than that required to operate the over current protection device of the supply circuit.

Grounding conductor: a conductor used to connect equipment or the grounded circuit of a wiring system to a grounding electrode or electrodes.

Grounding electrode (ground electrode): a conductor embedded in the earth, used for maintaining ground potential on conductors connected to it, and for dissipating into the earth current connected to it.

Grounding electrode conductor (grounding conductor): a conductor used to connect equipment or the grounded circuit of a wiring system to a grounding electrode.

Guarded by location: describes moving parts so protected by their remoteness from the floor, platform, walkway, or other working level, or by their location with reference to frame, foundation, or structure as to reduce the foreseeable risk of accidental contact by persons or objects. Remoteness from foreseeable, regular, or frequent presence of public or employed personnel may in reasonable circumstances constitute guarding by location.

Guardrail system: A rail system erected along the open sides and ends of platforms. The rail system consists of a toprail and midrail and their supports.

Halon: a colorless, electrically nonconductive gas that extinguishes fire by inhibiting the chemical chain reaction of fuel and oxygen. Halon 1211 is a liquefied gas, also known as bromochlorodifluromethane. Halon 1301 is also known as bromotrifluoromethane.

Hardware: buckles, D-rings, snap-hooks, and associated devices used to attach the components of a personal fall protection system.

Hazard: a dangerous condition, potential or inherent, that can bring about an interruption or interfere with the expected orderly progress of an activity. A source of potential injury to person or to property.

Hazardous (physical) agent: noise, non-ionizing and ionizing radiation, and temperature exposure of durations and quantities capable of causing adverse health effects.

Hazardous atmosphere: an atmosphere that may expose persons to the risk of death, incapacitation, impairment of ability to self rescue (i.e., escape unaided from a permit space), injury, or acute illness from one or more of the following causes:

a. Flammable gas, vapor, or mist in excess of 10% of its lower flammable limit (LFL);

b. Airborne combustible dust at a concentration that meets or exceeds its LFL;

c. Atmospheric oxygen concentration below 19.5% or above 23.5%;

d. Atmospheric concentration of any substance for which a dose or PEL is published and which could result in team member exposure in excess of its dose or PEL;

e. Any other atmospheric condition that is IDLH.

Hazardous energy control plan: the written plan that clearly and specifically identifies the hazardous energy sources and outlines the scope, purpose, responsibilities, and procedural steps for lockout and tagout and the requirements for testing the effectiveness of energy control measures to be used for the control of hazardous energy from stated sources.

Hazardous environment: an environment with an atmosphere that poses a risk of death, incapacitation, injury, or illness due to flammable or explosive hazards; hazardous substances or agents; oxygen concentrations below 19.5% or above 22%; or any other atmospheric condition recognized as IDLH.

Hazardous substance: any substance defined as a hazardous substance under 29 CFR 1910.120, 29 CFR 1926.65, or 40 CFR 302; any chemical determined to be a hazard as specified in 29 CFR 1910.1200 or 29 CFR 1926.59 to include a chemical (as a gas, liquid, vapor, mist, dust, or fume) which has been identified as causing adverse health effects in exposed employees.

Hazardous, toxic, radioactive waste (HTRW) activity: refers to the overall project or worksite involving the investigation, assessment, or clean-up of HTRW or the emergency response to releases of hazardous substances, hazardous waste, or

hazardous material as defined by 29 CFR 1910.120(a)(3) or 29 CFR 1926.65, at an HTRW site. Includes those activities undertaken for the EPA's Superfund Program, the Defense Environmental Restoration Program (which also includes FUDS and Installation Restoration Program activities), HTRW actions associated with Civil Works projects, and HTRW projects of other Government agencies. Such activities include, but are not limited to, preliminary assessments/site inspections; remedial investigations; feasibility studies; engineering evaluations/cost analyses; RCRA facility investigations/corrective measures studies/corrective measures implementations/closure plans/Part B permits; or any other pre-design investigations, remedial design, or remedial construction, operation or maintenance at known, suspected, or potential HTRW sites. Also includes activities conducted at containerized HTRW sites (leaking PCB transformers and leaking or suspected leaking USTs that contain hazardous substances).

Hazardous, toxic, radioactive waste (HTRW) operation: refers to a specific function on an HTRW site, such as sampling, monitoring, excavation, drum removal, etc.

Hazardous, toxic, radioactive waste (HTRW) site: any facility or location that:

a. Requires the planned or emergency clean-up of hazardous, toxic, radioactive waste; and

b. Is designated as an uncontrolled hazardous waste site or covered by the RCRA.

Heating torch: a device for directing the heating flame produced by the controlled combustion of fuel gases.

Heavy gear: diver-worn deep-sea dress, including helmet, in-water stage: a suspended underwater platform that supports a diver in the water. Breastplate, dry suit, and weighted shoes, (e.g., U.S. Navy Mark V gear).

Helmet (respiratory protection): a rigid respiratory inlet covering that also provides head protection against impact and penetration.

High efficiency particulate air (HEPA) filter: a filter that is at least 99.97% efficient in removing mono-disperse particles of 0.3 µm in diameter. The equivalent NIOSH 42 CFR 84 particulate filters are the N100, R100, and P100 filters.

High radiation area: any area, accessible to personnel, in which there exists radiation at such levels that a major portion of the body could receive in any 1 hour a dose in excess of 100 mrem.

High voltage: is a voltage of 600 volts or greater.

Hoist*:* a machinery unit that is used for lifting or lowering a freely suspended (unguided) load.

Hoisting equipment: commercially manufactured lifting equipment designed to lift and position a load of known weight to a location at some known elevation and horizontal distance from the equipment's center of rotation. "Hoisting equipment" includes, but is not limited to, cranes, derricks, tower cranes, barge-mounted derricks or cranes, gin poles and gantry hoist systems. A "come-a-long" (a mechanical device, usually consisting of a chain or cable attached at each end, that is used to facilitate movement of materials through leverage) is not considered "hoisting equipment."

Hood (respiratory protection): a respiratory inlet covering that completely covers the head and neck and may also cover portions of the shoulders and torso.

Hopper: a box having a funnel-shaped bottom, or a bottom reduced in size, narrowed, or necked to receive material and direct it to a conveyor, feeder, or chute.

Horizontal lifeline: a component of a horizontal lifeline system, which the component consists of a flexible line with connectors or other coupling means at both ends for securing it horizontally between 2 anchorage connectors.

Horse scaffold: a scaffold composed of work platforms supported by construction horses.

Hotline tools and ropes: those tools and ropes that are especially designed for work on energized high voltage lines and equipment. Insulated aerial equipment especially designed for work on energized high voltage lines and equipment shall be considered hot line.

Hot tapping: a procedure of attaching connections to equipment in service by welding and drilling.

Hot work: hot riveting, welding, burning, abrasive blasting, or other fire- or spark-producing operations.

Hot work, confined space: hot work in confined space: any activity involving riveting, welding, burning, powder-actuated tools, or similar fire-producing operations. Grinding, drilling, abrasive blasting, or similar spark-producing operations are also considered hot work except when such operations are isolated physically from any atmosphere containing more than 10% of the lower explosive limit of a flammable or combustible substance.

Hot work permit: written authorization to perform operations (for example, riveting, welding, cutting, burning, and heating) capable of providing a source of ignition.

Humping: the use of an elevated or "humped" rail in switching cars. On one side of the hump, cars are pushed up the rail by an engine; on the other side of the hump, cars are switched, by gravity, to their proper tracks.

Immediately dangerous to life or health (IDLH–respiratory hazard): an atmosphere that poses an immediate threat to life, would cause irreversible adverse health effects, or would impair an individual's ability to escape from a dangerous atmosphere.

Immediately dangerous to life or health (IDLH-confined space): any condition that poses an immediate or delayed threat to life or that would cause irreversible adverse health effects or that would interfere with an individual's ability to escape unaided from a permit space.

Impulse noise: noise is considered impulse when the variations in sound-pressure level involve peaks at intervals greater than 1 second.

Incidental employee: an employee who, under normal circumstances, would not be in an area where a system is under lockout and tagout but is required to enter or pass through such an area.

Incipient stage fire: a fire that is in the initial or beginning stage and that can be controlled or extinguished by portable fire extinguisher, Class II standpipe, or small hose systems without the need for protective clothing or breathing apparatus.

Independent wire rope core: a small 6 x 7 wire rope with a wire strand core; used to provide greater resistance to crushing and distortion of the wire rope.

Induced current: the generation of a current in a conductor caused by its proximity to a second alternating current source, a moving direct current source (such as a motor), or an extraneous voltage source (such as lightning).

Inside post: the post nearest to the structure against which the scaffold is erected.

Interior structural firefighting: the physical activity of fire suppression, rescue, or both, inside of buildings or enclosed structures that are involved in a fire situation beyond the incipient stage. (See 29 CFR 1910.155)

Intrinsically safe equipment and associated wiring: equipment and associated wiring in which any spark or thermal effect, produced either normally or in a specified fault condition, is incapable, under certain prescribed test conditions, of causing ignition of a mixture of flammable or combustible material in air in its most easily ignitable concentration.

In-water stage: a suspended underwater platform that supports a diver in the water.

Ionizing radiation: electromagnetic and particulate radiation that causes molecular ionization; includes alpha particles, beta particles, gamma rays, x-rays, neutrons, high speed electrons and protons, and other atomic matter.

Isolation: an activity that physically prevents the transmission or release of energy.

Jib: on hammerhead cranes, the horizontal structural member attached to the rotating superstructure of a crane and upon which the load trolley travels; on mobile cranes, an extension attached to the boom to provide added boom length for lifting specified loads.

Job-made ladder: a ladder fabricated by employees, typically at the construction site, and is not commercially manufactured.

Labeled: equipment or materials that has an attached label, symbol, or other identifying mark of an organization that is acceptable to the authority having jurisdiction and concerned with the product evaluation that maintains periodic inspection of production of labeled equipment or materials and by whose labeling the manufacturer indicates compliance with appropriate standards or performance in a specified manner.

Laboratory waste pack: a drum containing individual containers of laboratory materials normally surrounded by cushioning absorbent material.

Ladder: a device incorporating or employing steps, rungs, or cleats on which a person may step to ascend or descend.

Ladder climbing safety device: device that is connected to a harness or belt to prevent falls from ladders.

Ladder, combination: a portable ladder capable of being used either as a stepladder or as a single or extension ladder. It may also be capable of being used as a trestle ladder or a stairwell ladder. Its components may be used as single ladders.

Ladder, extension: a non-self-supporting portable ladder adjustable in length. It consists of two or more sections, traveling guides, or brackets or the equivalent and so arranged as to permit length adjustment.

Ladder, individual-rung/step: a ladder without a side rail or center rail support, made by mounting individual steps or rungs directly to the side or wall of the structure.

Ladder, portable: a ladder that can readily be moved or carried, usually consisting of side rails joined at intervals by steps, rungs, cleats, or rear braces.

Ladder, sectional: a non-self-supporting portable ladder, nonadjustable in length, consisting of two or more sections, and so constructed that the sections may be combined to function as a single ladder.

Ladder, side step fixed: a fixed ladder that requires a person getting off at the top to step to the side of the ladder side rails to reach the landing.

Ladder, single cleat: a ladder consisting of a pair of side rails connected together by cleats, rungs, or steps.

Ladder, single rail: a portable ladder with rungs, cleats, or steps mounted on a single rail instead of the typical two rails.

Ladder, through step fixed: a fixed ladder that requires a person getting off at the top to step between the side rails of the ladder to reach the landing.

Ladder, trestle: a self-supporting ladder consisting of two single ladders hinged or joined at the top to form equal angles with the base.

Ladder type: the designation that identifies the working load.

Ladder-type platform: a platform that resembles a ladder covered by planking.

Lagging: timber planks, steel plates, or other structural members used for transferring loads and supporting soil or rock.

Landing area:

a. The primary surfaces, comprising the surface of the runway, runway shoulders, and lateral safety zones;

b. The “clear zone” beyond the ends of each runway (i.e., the extension of the primary surface);

c. All taxiways, and the lateral clearance zones along each side for the length of the taxiways; and

d. All aircraft parking aprons plus the area extending beyond each edge all around the aprons.

Lanyard: a flexible line that is used to secure a safety belt or harness to a lifeline or directly to a point of anchorage.

Laser: a device that produces an intense, coherent, directional beam of light.

Lead: the device on a pile driver that maintains the hammer in position during the driving. A lead typically is made up of two vertical rails or guides, held together by a frame, in which the hammer moves vertically.

Lead (leading) wire: an insulated expendable wire used between the electric power source and the electric blasting cap circuit.

Leader: the upper portion of the primary axis of a tree.

Leading edge: the unprotected side and edge of a floor, roof, or formwork for a floor or other walking/working surface (such as deck) that changes location as additional floor, roof, decking, or formwork sections are placed, formed, or constructed.

Ledger: is a horizontal scaffold member upon which bearers rest. The longitudinal member that joins scaffold uprights, posts, poles, and similar members.

Lifeline: a line provided for direct or indirect attachment to a worker's body belt, body harness, lanyard, or deceleration device: may be horizontal or vertical in application.

Lifeline: a line (horizontal or vertical) for direct attachment between a worker's personal fall protection device and a point of anchorage.

Lift supervisor: the person designated to be in charge of crane lifting; this may be the crane operator or an individual whose function it is to supervise lifting operations.

Limbing: to cut limbs from a tree.

Line-breaking: the intentional opening of a pipe, line, or duct that is or has been carrying flammable, toxic, or corrosive material, an inert gas, or any fluid at a pressure or temperature capable of causing injury.

Liquefied petroleum gas (LP-Gas): any material that is composed predominantly of any of the following hydrocarbons (or mixtures of them): propane, propylene, butanes, and butylenes.

List: the angle of inclination about the longitudinal axis of a vessel.

Listed: equipment, materials, or services included in a list published by an organization acceptable to the authority having jurisdiction (AHJ) and concerned with the evaluation of products or services that maintains periodic inspection of production of listed equipment or materials or periodic evaluation of services and whose listing states either that the equipment, material, or service meets identified standards or has been tested and found suitable for a specified purpose.

Live-boating: The practice of supporting a SSA or mixed gas diver from a vessel that is underway.

Live-line bare-hand technique: a highly specialized technique (usually used on medium- and high-voltage transmission lines) where a qualified employee working from an insulated aerial platform is electrically bonded to an energized line, effectively canceling any electrical potential difference across the worker's body and protecting the employee from electric shock.

Live-line bare-hand work: work that is performed barehanded from an insulated aerial platform, with the linemen in the basket at the same potential as the live conductor on which they are working.

Live-line tools: tools used by qualified employees to handle energized conductors. The tool insulates the employee from the energized line, allowing the employee to perform the task safely. Also known as "hot sticks."

Load block: an assembly of hook or shackle, swivel, pins, and frame.

Load indicator: a device that measures the weight of the load.

Load moment indicator (rated capacity indicator): a device that indicates the bending moment on a crane by measuring both the load on a boom and the horizontal distance from the load (boom point) to the crane's axis of rotation. Load moment indicators are often equipped with warning devices or disengaging devices that are actuated before a crane is overloaded.

Load performance test: a test of a crane's performance, structural competence, and stability while lifting at a percentage of its rated load capacity.

Load-rated: the maximum allowable working load.

Load-working: the external load applied to the crane or derrick, including the weight of load-attaching equipment such as load blocks, shackles, and slings.

Local application system: a fixed fire suppression system that has a supply of extinguishing agent with nozzles arranged to automatically discharge extinguishing agent directly on the burning material to extinguish or control the fire.

Lockout: a form of hazardous energy control using the placement of a lockout device, in accordance with established procedures, on an energy-isolating device to ensure that the energy-isolating device and the system being controlled cannot be operated until the lockout device is removed.

Lockout device: a device that uses a positive means, such as a key or combination lock, to hold an energy-isolating device in the safe position and prevent the energizing of a system.

Long-bed end-dump trailer: a trailer with a length of 30 ft (9.1 m) or more, a length-to-width ratio of or exceeding 4:1, and which is used to transport and dump material.

Loose-fitting facepiece: a respiratory inlet covering that is designed to form a partial seal with the face.

Low-slope roof: a roof having a slope less than or equal to 4 in 12 (vertical to horizontal).

Low voltage: voltage less than 600 volts.

Maintenance hole: a surface enclosure that personnel may enter that is used for installing, operating, and maintaining equipment and cable.

Mandrel: a steel shaft and bearings assembly on which a tool, such as an abrasive wheel, is mounted and by which power is transmitted from the machine to the tool.

Marine activities: operations and work involving proximity to or on water.

Mast (derrick): the upright member of the derrick used for support of the boom.

Mast climbing work platform: a hoist having a working platform used for temporary purposes to raise personnel and materials to the working position by means of a drive system mounted on an extendable mast which may be tied to a building.

Material Safety Data Sheet (MSDS): a sheet that provides information on substance identification; ingredients and hazards; physical data; fire and explosion data; reactivity data; health hazard information; spill, leak, and disposal procedures; and special precautions and comments.

Metal-clad cable (MC): a factory assembly of one or more conductors, each individually insulated and enclosed in a metallic sheath of interlocking tape or a smooth or corrugated tube.

Metal decking: a commercially manufactured, structural grade, cold-rolled metal panel formed into a series of parallel ribs; this includes metal floor and roof decks, standing seam metal roofs, other metal roof systems, and other products such as bar gratings, checker plate, expanded metal panels, and similar products. After

installation and proper fastening, these decking materials serve a combination of functions including, but not limited to: a structural element designed in combination with the structure to resist, distribute, and transfer loads, stiffen the structure and provide a diaphragm action; a walking/working surface; a form for concrete slabs; a support for roofing systems; and a finished floor or roof.

Misfire: an explosive charge that failed to detonate.

Mixed-gas diving: a diving mode in which the diver breathes mixture other than air, e.g., helium-oxygen, (OEA).

Mobile conveyor: a conveyor supported on a structure that is movable under its own power.

Monorail: a single run of overhead track.

Motor vehicle: any vehicle propelled by a self-contained power unit, except a vehicle designed solely for use on railways or other trackage, or equipment designed exclusively for use off the highway.

Mud capping (bulldozing, adobe blasting, or dobying): blasting by placing a quantity of explosives against a rock or other object without confining the explosives in a drill hole.

Mudsill: a 2-in x 10-in x 8-in (5.1-cm x 25.4-cm x 20.3-cm) (minimum) wood plate that is used to distribute the scaffolding load over a suitable ground area. The size of the mudsill is determined by the load carried over a particular ground area and by the nature of the soil supporting the sills.

Multi-employer work site: a work site where more than one employer occupies the same work site. The Government considers the Prime Contractor to be the “controlling authority” for all subcontractors.

Multiple-lift rigging (Christmas tree lifting): a rigging assembly manufactured by wire rope rigging suppliers that facilitates the attachment of up to three independent loads to the hoist rigging of a crane.

Multipurpose dry chemical: a dry chemical that is approved for use on Class A, Class B, and Class C fires.

Negative pressure respirator (tight fitting): a respirator in which the air pressure inside the facepiece is negative during inhalation with respect to the ambient air pressure outside the respirator.

Nitrox Gas (EANx): Any oxygen/nitrogen mixture exceeding the ratio of 21% oxygen/79% nitrogen found naturally occurring in air.

No-decompression limits: the depth-time limits of the "no-decompression limits and repetitive dive group designation table for no-decompression air dives" as specified in the U.S. Navy Diving Manual or equivalent.

Nominal dimension: the dimension of material before it is surfaced and finished.

Non-guided personnel hoist system: a hoist system used to transport personnel in a device that is not attached to fixed tracks or guide ropes (a boatswain's chair is an example of a non-guided personnel hoist).

Non-ionizing radiation: those electromagnetic radiations that do not cause ionization (but may be absorbed) in biological systems; includes low frequency ultraviolet light, infrared light, heat, laser, microwaves, and radio waves.

Nonmetallic-sheathed cable: a factory assembly of two or more insulated conductors having an outer sheath of moisture-resistant, flame-retardant, nonmetallic material.

Non-permit confined space: a confined space that does not contain, or with respect to atmospheric hazards does not have the potential to contain, any hazard capable of causing death or serious physical harm.

Normally unoccupied remote facility: a facility operated, maintained, or serviced by employees who visit the facility only periodically to check its operation and to perform necessary operating or maintenance tasks. No employees are permanently stationed at the facility. Facilities meeting this definition are not contiguous with, and must be geographically remote from, all other buildings, processes, or persons.

Nosing: that portion of a tread projecting beyond the top of the tread immediately below.

Notch: when cutting a tree to be felled, a notch is cut into the tree on the same side to which the tree is to fall; the notch consists of a horizontal cut (of depth approximately one-third the tree's diameter); the top of the notch is cut at a 45° angle from a height of 2.5 in (6.4 cm) per 1 ft (0.3 m) of diameter above the base of the notch.

OEA: ***> See Nitrox Gas***

Open conductors: wires that are run as separate conductors, in contrast to wires run through conduit, cables, or raceways.

Opening: a gap or void 12 in (30.5 cm) or more in its least dimension in a floor, roof, or other walking/working surface. Skylights and smoke domes that do not meet the strength requirements of 29 CFR 1926.754(e)(3) shall be regarded as openings.

Operational performance test: a test, conducted without a test load, to determine the proper operation of a crane.

Outrigger: extendable or fixed structural members with one end attached to the base of a piece of equipment and the other end resting on floats on the ground: used to distribute loads in supporting equipment.

Outrigger float: the pedestal (or bearing pad) on which an outrigger beam is supported.

Outside post: the post away from the structure against which the scaffold is erected.

Overexposure: an exposure to a safety or health hazard above the PEL or, if there is no PEL, above the published exposure levels for the hazard.

Overland conveyor: a single or series of belt conveyors designed to carry material across a distance, usually following the general contour of the load.

Overriding operational necessity: circumstances in which essential work cannot be delayed for safety or environmental reasons, or could not reasonably have been anticipated.

Oxyfuel gas cutting: an oxygen cutting process that uses heat from an oxyfuel gas flame.

Oxyfuel gas welding: a welding process that joins work pieces by heating them with an oxyfuel gas flame

Oxygen deficient atmosphere: an atmosphere with an oxygen content below 19.5% by volume.

Oxygen enriched atmosphere: an atmosphere containing more than 23.5% oxygen by volume.

Peak particle velocity: a measure of how fast the ground moves during an explosive blast.

Pendant: a rope or strand of specified length with fixed end connections.

Performance test: a test to determine the proper operation of a crane and the ability of the crane to safely lift loads within its performance rating. A performance test includes operational performance tests and load performance tests.

Perimeter protection: measures taken to prevent personnel, vehicles, and materials from falling into an excavation:

a. **Class I perimeter protection**: meets the following requirements:

(1) When Class I perimeter protection guards against personnel falling into an excavation it shall meet the following: ***> See Section 21.3***

(a) Have the strength, height, and maximum deflection requirements for guardrails;

(b) Provide fall protection equivalent to that provided by a toprail, midrail, and toeboard; and

(c) Have post spacing equivalent to a standard guardrail.

(2) When Class I perimeter protection guards against traffic (vehicles and/or equipment) falling into an excavation it shall be designed, by a qualified person, to withstand the potential forces and bending moments due to impact by traffic; if the area adjacent to the barricade will be used by both personnel and vehicles or equipment, provisions shall be made for physically dividing the excavation, personnel, and traffic areas from one another.

b. **Class II perimeter protection**: consists of warning barricades or flagging placed at a distance not closer than 6 ft (1.8 m) from the edge of the excavation: warning barricades or flagging do not have to meet the requirements for Class I

perimeter protection but do need to display an adequate warning at an elevation of 3 ft (0.9 m) to 4 ft (1.2 m) above ground level.

c. **Class III perimeter protection**: warning barricades or flagging placed a distance not closer than 6 in (15.2 cm) nor more than 6 ft (1.8 m) from the edge of the excavation: warning barricades or flagging do not have to meet the requirements for Class I perimeter protection but do need to display an adequate warning at an elevation of 3 ft (0.9 m) to 4 ft (1.2 m) above ground level.

Permanent floor: a structurally completed floor at any level or elevation (including slab on grade).

Permit-required confined space (permit space): a confined space that has one or more of the following characteristics:

a. Contains or has the potential to contain a hazardous atmosphere,

b. Contains a material that has the potential for engulfing an entrant,

c. Has an internal configuration such that an entrant could be trapped or asphyxiated by inwardly converging walls or by a floor that slopes downward and tapers to a smaller cross-section, or

d. Contains any other recognized serious safety or health hazard.

Personal fall arrest system: an engineered system used to arrest an employee in a fall; consists of an anchorage, connectors, body harness, and may include a lanyard, deceleration device, lifeline, or suitable combination of these.

Personal fall protection system: an engineered system that protects employees from falls.

Physician/ Licensed healthcare professional (PLHCP): an individual whose legally permitted scope of practice (i.e., license, registration, or certification) allows him/her to independently provide, or be delegated the responsibility to provide, some or all of the health care services required by 05.E.08.

Plank platform: a work platform made up of wood boards (oriented horizontally).

Planking: a wood board or fabricated component that is used as a flooring member.

Point of anchorage: a secure point of attachment for lifelines, lanyards, or deceleration devices.

Portable electric tools: electric equipment intended to be moved from one place to another.

Portable ladder: a ladder that can be readily moved or carried.

Portable tank: any closed vessel having a liquid capacity over 60 gal (0.23 m^3) and not intended for fixed installation.

Portal: the entrance to a tunnel.

Position hazard analysis (PHA): a documented process by which the duties (or tasks) of an employee's job position are outlined, the actual or potential hazards of each duty are identified, and measures for the elimination or control of those hazards are developed.

Positioning device: a body belt or body harness system rigged to allow an employee to be supported on an elevated vertical surface, such as a wall, and work with both hands free while leaning.

Positive-pressure respirator: a respirator in which the pressure inside the respiratory inlet covering exceeds the ambient air pressure outside the respirator.

Powered air-purifying respirator (PAPR): an air-purifying respirator that uses a blower to force the ambient air through air-purifying elements to the inlet covering.

Powered industrial truck: a mobile power propelled truck used to carry, push, pull, lift, stack, or tier materials. **>** ***See Forklift***.

Pre-discharge employee alarm: an alarm that will sound at a set time before actual discharge of an extinguishing system so that employees may evacuate the discharge area before system discharge.

Pre-entry briefings: an information briefing given by the site safety and health supervisor to employees before their entry to an HTRW site and instructing employees in the contents of the site-SSHP.

Premises wiring: the interior and exterior wiring, including power, lighting, control, and signal circuit wiring with all of the associated hardware, fittings, and wiring devices, both permanently and temporarily installed, which extend from the load-end of the service lateral conductors to the outlets.

Prescribed fire: any fire ignited to meet specific management objectives.

Pressure demand respirator: a positive-pressure, atmosphere-supplying respirator that admits breathing air to the facepiece when the positive pressure is reduced inside the facepiece by inhalation.

Pressure systems: all pipe, tubing, valves, controls, and other devices that operate or are maintained above atmospheric pressure. **>** ***See Vacuum systems.***

Primer: a cartridge or container of explosives into which a detonator or detonating cord is inserted or attached.

Prohibited condition: any condition in a permit space that is not allowed by the permit during the period when entry is authorized.

Protective system: a method of protecting employees from cave-ins, from material falling into an excavation, or from the collapse of adjacent structures; includes benching, sloping, shoring, trench shields, underpinning, rock bolting, etc.

Purlin (in systems-engineered metal buildings): a "Z" or "C" shaped member formed from sheet steel spanning between primary framing and supporting roof material.

Qualified line-clearance tree trimmer: a tree worker who, through related training and on-the-job experience, is familiar with the hazards in line clearance and has demonstrated his/her ability in the performance of the special techniques involved.

Qualified line-clearance tree trimmer trainee: any worker undergoing line-clearance tree trimming training who, in the course of such training, is familiar with the hazards in line clearance and has demonstrated his/her ability in the performance of the special techniques involved.

Qualified person: one who, by possession of a recognized degree, certificate, or professional standing, or extensive knowledge, training, and experience, has successfully demonstrated his/her ability to solve or resolve problems related to the subject matter, the work, or the project.

Qualified person (electrical): one who has the skills and knowledge related to the construction and operation of the electrical equipment and installations and has received safety and health training on the hazards involved.

Qualified tree worker: an individual who, through related training and on-the-job experience, is familiar with equipment, techniques, and hazards of tree maintenance and removal and with the equipment used in such operations and has demonstrated his/her ability in the performance of the special techniques involved.

Qualitative fit test (QLFT): a pass/fail fit test to assess the adequacy of respirator fit that relies on the individual's response to the test agent.

Quantitative fit test (QNFT): an assessment of the adequacy of respirator fit by numerically measuring the amount of leakage into the respirator.

Rad: a measure of the dose of ionizing radiation to the body tissue in terms of the energy absorbed per unit of mass of the tissue.

Radiant energy: the energy of electromagnetic waves produced by movement of molecules excited by the heat of an electric arc, gas flame, or the passage of electric current. Includes ultraviolet, visible light, and infrared energy.

Radiation area: any area, accessible to personnel, in which there exists radiation at such levels that a major portion of the body could receive in any 1 hour a dose in excess of 5 mrem, or in any 5 consecutive 8-hour days a dose in excess of 100 mrem.

Radioactive material: any material that emits, by spontaneous nuclear disintegration, electromagnetic or particulate emanations.

Radiological device: machinery or equipment that produces or contains ionizing radiation, such as nuclear density meters and radiographic testing machines.

Rails: the side structural members of a ladder to which rungs, cleats, or steps are attached.

Recompression chamber: a pressure vessel for human occupancy such as a surface decompression chamber, closed bell, or deep diving system used to decompress divers to treat decompression sickness.

Reconfiguration: the addition or subtraction of boom, jib, counterweight or, for a fixed crane, a change in foundation.

Reeving: a rope system in which the rope travels around drums and sheaves.

Rem (roentgen equivalent in man): a measure of the dose of ionizing radiation to body tissue in terms of its biological effect; the dose required to produce the same biological effect as one roentgen of high-penetration of x-rays.

Respiratory inlet covering: that portion of a respirator that forms the protective barrier between the user's respiratory tract and an air-purifying device or breathing air source, or both. It may be a facepiece, helmet, hood, suit, or a mouthpiece respirator with nose clamp.

Rest: a period of time during which the person concerned is off duty; is not performing work, including administrative tasks; and is afforded the opportunity for uninterrupted sleep. This does not include time for breaks, meals, or travel.

Restricted area: when used in conjunction with ionizing radiation, any area to which access is controlled by the employer for purposes of protecting individuals from exposure to ionizing radiation.

Roll out: the unintentional disengagement of a snaphook caused when the gate is depressed under torque or while twisting or turning.

Rope grab: a device that attaches to a lifeline as an anchoring point that provides a means of arresting a fall.

Rope-guided personnel hoist system: a hoist system, used to transport personnel in a cage, which is guided by wire ropes as differentiated from a hoist system using anchored rail arrangements.

Rotation resistant rope: a wire rope consisting of an inner layer of strand laid in one direction covered by a layer of strand laid in the opposite direction: this has the effect of counteracting torque by reducing the tendency of the finished rope to rotate.

Runner: a horizontal scaffold member that forms a tie between posts and may also support a bearer.

Runway: a personnel passageway elevated above the surrounding floor or ground level, such as a foot walk along shafting or a walkway between scaffolds.

Saddle-jib: a type of jib on a tower crane that is supported by pendants. The jib is horizontal or nearly horizontal, non-luffing, and the load hook is suspended by a trolley that moves along the jib.

Safety and Occupational Health Office Dive Safety Representative: the Safety and Occupational Health Office representative assigned the responsibility of dive safety. This individual provides dive safety advice to operational elements and actively participates in the review and comment process for all diving plans and hazard analyses, as well as on-site monitoring of diving operations; must successfully complete the USACE diving safety, diving supervisor, or diving inspector course and maintain certification by attending a HQUSACE-sponsored dive inspector course every 4 years. Unless required by position, this individual is not required to perform 12 working/training dives to maintain certification.

Safety belt: a strap, with means for securing about the waist and attaching to a lanyard, lifeline, or decelerating device, which is used to limit the fall of a worker.

Safety can: an approved container, of not more than 5 gal (18.9 L) capacity, having a spring-closing lid and spout cover and designed to safety relieve internal pressures under fire exposure.

Safety deck attachment: an initial attachment that is used to secure an initially placed sheet of decking to keep proper alignment and bearing with structural support members.

Safety factor: the ratio of the ultimate braking strength of a member or piece of material or equipment to the actual working stress or safe working load when in use.

Safety harness: a design of straps that is secured about the employee in a manner to distribute the arresting forces over at least the thighs, shoulders, and pelvis, with provisions for attachment to a lanyard, lifeline, or decelerating device.

Safety precaution area: those portions of approach-departure clearance zones and transitional zones where placement of objects incident to contract performance might result in vertical projections at or above the approach-departure clearance or the transitional surface.

Safety relief valves: valves that relieve excess pressure or vacuum (depending on their design) that would otherwise damage equipment or cause injury to personnel.

Safety sign: a visual alerting device in the form of a sign, label, decal, placard, or other marking that advises the observer of the nature and degree of the potential hazard(s) that can cause an accident. It may also provide other directions to eliminate or reduce the hazard and may advise of the probable consequences of not avoiding the hazard.

Safety sign alert symbol: a symbol that indicates a potential personal injury hazard. It is composed of an equilateral triangle surrounding an exclamation mark.

Safety sign message panel: area of the safety sign that contains those words related to: identification of the hazard, how to avoid the hazard, and probable consequences of not avoiding the hazard.

Safety sign panel: area of a safety sign having a distinctive background color different from adjacent areas of the sign or which is clearly delineated by a line or margin.

Safety sign signal word panel: area of the safety panel that contains the signal word.

Safety tag: a device usually made of card stock, paper, paperboard, plastic, or other material on which letters, markings, symbols, or combinations thereof, appear for the purpose of alerting persons to the presence of a temporary hazard or hazardous condition created by situations such as shipment, setup, service, or repair. The tag is removed when the hazard or hazardous condition no longer exists.

Scaffold: temporary elevated platform and its supporting structure used for supporting worker(s), materials, or both.

Scaffold, double pole: a scaffold supported from the base by a double row of posts. This scaffold is independent of support from walls and is constructed of posts, runners, horizontal platform bearers, and diagonal bracing (also known as independent pole scaffold).

Scaffold, float: a scaffold hung from overhead supports by means of ropes and consisting of a unit having diagonal bracing underneath. The scaffold rests upon and is securely fastened to two parallel plank bearers at right angles to the span (also known as ship scaffold).

Scaffold, horse: a scaffold for light or medium duty that is composed of horses supporting a platform.

Scaffold, interior-hung: a suspended scaffold consisting of a work platform suspended from the ceiling or roof structure by fixed length supports.

Scaffold, ladder jack: a light-duty scaffold consisting of a platform supported by brackets attached to single or extension ladders.

Scaffold, load ratings: maximum loadings for the following categories:

a. **Heavy duty**: a scaffold designed and constructed to carry a working load of 75 lbs per square foot (366.2 kg/m^2), that is intended for stone masonry work, with storage material on the platform.

b. **Medium duty**: a scaffold designed and constructed to carry a working load of 50 lbs per square foot (244.1 kg/m^2), that is intended for bricklayers or plasterers, with weight of material in addition to workers.

c. **Light duty**: a scaffold designed and constructed to carry specific working load of 25 lbs per square foot (122.1 kg/m^2), that is intended for workers only, with no material storage other than weight for tools.

d. **Special duty**: a scaffold designed and constructed to carry specific types of objects, such as palletized materials. The design of planks and other types of scaffold units, the scaffold, and accessories shall be based on categories of load ratings.

Scaffold, manually propelled: a scaffold assembly supported by casters and moved only manually.

Scaffold, mason's multiple-point adjustable suspension: a scaffold having a continuous platform supported by bearers suspended by wire rope hoists from overhead supports.

Scaffold, metal frame: a scaffold consisting of a work platform supported by prefabricated metal frames.

Scaffold, needle-beam: a platform resting on two bearers that is suspended by a line.

Scaffold, outrigger: a scaffold consisting of a work unit supported by outriggers projecting beyond the wall or face of the building or structure, the inboard ends of which are secured inside of such building or structure.

Scaffold, pump jack: a scaffold consisting of a work platform supported by movable support brackets mounted on vertical poles.

Scaffold, single-point suspension: a scaffold supported by a single wire rope from an overhead support so arranged and operated as to permit the raising or lowering of the platform to desired working position.

Scaffold, single pole: a unit resting on bearers or cross beams. The outside ends of this unit are supported on runners secured to a single row of posts or uprights, and the inner ends of this unit are supported on or in the wall.

Scaffold, stonesetters' multiple-point adjustable suspension: a swinging type scaffold having a unit supported by members that is suspended at four points.

Scaffold, system: a scaffold consisting of posts with fixed connection points that accept runners, bearers, and diagonals that can be interconnected at predetermined levels.

Scaffold, tube and coupler: a scaffold consisting of a work platform supported by individual pieces of tubing (uprights, bearers, runners, bracing) connected with couplers.

Scaffold, two-point suspension (swinging scaffold/swinging stage): a suspension scaffold consisting of a platform supported by hangers (stirrups) suspended by two ropes from overhead supports and equipped with means to raise and lower the platform.

Scaffold, window jack: a supported scaffold consisting of a platform supported by a bracket or jack that projects through a window opening.

Scaled distance: a scaled factor (ft/lb units) of the potential damage to a structure, based on the distance from the nearest structure to the blast site and the weight of explosives per delay.

Scaling: the removal of loose, overhanging, protruding, or otherwise precariously positioned material from above or along the sides of an excavation.

Scheduled work: Work that is regular and recurring, in that it forms a similar pattern for more than 50% of a working tour.

Scissors lift: a raising/lowering device that is supported or stabilized by one or more pantograph leg sections.

SCUBA: an acronym for self-contained underwater breathing apparatus, in which the supply of breathing mixture carried by the diver is independent of any other source.

Sea-keeping: the aspects of a vessel's design and construction that determine its ability to operate efficiently in the body of water where it will operate (e.g., stability, strength, and speed).

Sea-worthy: a vessel that is fit in all aspects for the anticipated perils of the voyage and will carry the crew and cargo in a safe condition.

Self-contained breathing apparatus (SCBA): an atmosphere-supplying respirator for which the breathing air source is designed to be carried by the user.

Self-retracting lanyard: a deceleration device used in conjunction with a full-body harness that contains a drum-wound line that may be slowly extracted from, or retracted onto, the drum under slight tension during normal employee movement and that, after onset of a fall, automatically locks the drum and arrests the fall.

Separately derived system: a premises wiring system whose power is derived from generator, transformer, or converter winding and has no direct electrical connection, including a solidly connected grounded circuit conductor, to supply conductors originating in another system.

Service: the conductors and equipment for delivering electric energy from the serving utility to the wiring system of the premises served.

Service conductors: the conductors from the service point to the service disconnecting means.

Service drop: the overhead service conductors from the last pole or other aerial support to and including the splices, if any, connecting to the service-entrance conductors at the building or other structure.

Service life: the period of time that a respirator, filter or sorbent, or other respiratory equipment provides adequate protection to the wearer.

Service station (automotive): that portion of property where liquids used as motor fuels are stored and dispensed from fixed equipment into the fuel tanks of motor vehicles or approved containers and shall include any facilities for the sale and service of tires, batteries, and accessories.

Service station (marine): that portion of a property where liquids used as fuels are stored and dispensed from equipment on shore, piers, wharves, or floating docks into the fuel tanks of self-propelled craft.

Shackle: a U-shaped metal fitting with a pin through the ends.

Shaft: a passage made from the surface of the ground to a point underground; shafts cut through the ground at an angle greater than 20° to the horizontal. ***> See Tunnel.***

Shallow dose equivalent: applies to the external exposure of the skin or an extremity. It is taken as the dose equivalent at a tissue depth of 0.007 cm averaged over an area of 1.6 in^2 (10 cm^2).

Shear connector: headed steel studs, steel bars, steel lugs, and similar devices that are attached to a structural member for the purpose of achieving composite action with concrete.

Sheave: the grooved wheel of a pulley or block over which rope or cable is passed.

Sheeting: **>** ***See Upright***.

Shield: a structure that is designed to withstand the forces imposed on it by the walls of an excavation and prevents cave-ins.

Ship repair: includes any repair of a vessel including, but not restricted to, alterations, conversion, installation, cleaning, painting, and maintenance work. This includes work in confined and enclosed spaces and other dangerous atmospheres in vessels, vessel sections, and on land-side operations regardless of geographic location.

Shoring: a support member that resists compressive forces imposed by a load.

Site control procedures: procedures delineated in the site control program that will be used to minimize any potential contamination of workers, protect members of the public from the site's hazards, and prevent vandalism.

Site Safety and Health Officer (SSHO): the superintendent or other qualified or competent person who is responsible for on-site safety and health.

Site Safety and Health Officer (HTRW): the person on-site with the responsibility for implementation of the APP and SSHP appendix at HTRW activities.

Site Safety and Health Manager (SHM): the CIH, CSP, or CHP responsible for development and enforcement of the APP and SSHP appendix for HTRW activities.

Site safety and health plan (SSHP): an appendix to the APP that describes the site-specific practices.

Site work zones: zones of differing work activities and hazards established to reduce the accidental spread of hazardous substances from a contaminated to an uncontaminated area and to control exposure of personnel to HTRW hazards. There are generally three categories of site work zones:

a. **Exclusion zones**, where contamination does or could occur,

b. **Contamination-reduction zones**, which are transition areas between contaminated areas and clean areas and where decontamination takes place, and

c. **Support zones**, which are uncontaminated areas where administrative and support functions are located.

Sloping: a method of protecting employees from cave-ins by cutting the sides of the excavation in the arrangement of slopes; The angle of the slope needed to prevent cave-in is a function of the soil type, environmental factors such as moisture and freezing weather, and the magnitude and location of any loads and vibration surcharged upon the slopes.

Sling: an assembly used for lifting when connected to a lifting mechanism at the sling's upper end and when supporting a load at the sling's lower end. **>** ***See Figure 15-4.***

Sling - basket: loading with the sling passed under the load with both ends, end attachments, eyes, or handles on the hook or a single master link.

Sling - choker: loading with the sling passed through one end attachment, eye, or handle and suspended by the other.

Sling - vertical: a load suspended on a single, vertical, part or leg.

Small hose system: a system of hose, ranging in diameter from 5/8 in (1.6 cm), that is for use by employees and provides a means for the control and extinguishment of incipient stage fire.

Snap hook: a connector consisting of a hook-shaped member with a normally closed keeper, or similar arrangement, that may be opened to permit the hook to receive an object and, when released, automatically closes to retain the object. The locking type has a self-closing, self-locking keeper that remains locked until unlocked and pressed open for connection or disconnection. The non-locking type has a self-closing keeper that remains closed until pressed open for connection or disconnection.

Snap-ties: a concrete wall-form tie, the end of which can be twisted or snapped off after the forms have been removed.

Soldering: a welding process that joins materials by heating them to a temperature that will not melt them but will melt a filler material which adheres to them and forms a joint.

Sound pressure: steady state: sound that does not significantly change in intensity or frequency with time.

Specular reflections: reflections from a smooth surface, such as a mirror, glass, metal, etc.

Spindle: a long tapered pin or rod serving as an axis in spinning.

Splice - eye: a splice formed by bending a rope's end back onto itself and splicing it into the rope so that a loop is formed.

Splice - hand tucked: a loop formed in the end of a rope by tucking the end of the strands back into the main body of the rope.

Splice - long: a splice without an appreciable increase of circumference that is used when the rope must run over a sheave or through a hole.

Splice - mechanical: a loop formed in the end of a rope and connected by pressing (swaging) one or more metal sleeves over the junction of the rope.

Splice - short: a splice using less material than a long splice but increasing the circumference.

Springing: the creation of a chamber or pocket in the bottom of a drill hole so that larger quantities of explosives may be inserted; made by the use of a moderate quantity of explosives.

Spring line: an imaginary line connecting the points at which the ceiling (roof) arches begin.

Sprinkler alarm: an approved device installed so that any discharge from a sprinkler system equal to or greater than that from a single automatic sprinkler will result in an audible signal on the premises.

Sprinkler system: a system of piping designed in accordance with fire protection engineering standards and installed to control or extinguish fires. The system includes an adequate and reliable water supply, a network of specialty sized piping and sprinklers that are interconnected, and a control valve and device for actuating an alarm when the system is in operation.

Stable rock: natural solid mineral material that can be excavated with vertical sides and remain intact while exposed.

Standby diver: a diver at the dive location available to assist a diver in the water; standby divers will be dressed for immediate entry into the water.

Standpipe system:

a. **Class I standpipe system**: a 2-1/2 in (6.4 cm) hose connection for use by fire departments and those trained in handling heavy fire streams.

b. **Class II standpipe system**: a 1-1/2 in (3.8 cm) hose system that provides a means for the control or extinguishment of incipient stage fires.

c. **Class III standpipe system**: a combined system of hose that is for use by employees trained in the use of hose operations and that is capable of furnishing effective water discharge during the more advanced stages of fire (beyond the incipient stage) in the interior of workplaces.

Station bill: a placard that designates vessel personnel duties and procedures to be followed in the event of an emergency or emergency drill. Placards are permanently placed in personnel quarters and work areas, and are strategically located throughout the vessel.

Steel erection: the construction, alteration, or repair of steel buildings, bridges, and other structures, including the installation of metal decking and all planking used during the process of erection.

Steel joist: an open web, secondary load-carrying member of 144 ft (43.9 m) or less, designed by the manufacturer, used for the support of floors and roofs. This does not include structural steel trusses or cold-formed joists.

Steel joist girder: an open web, primary load-carrying member, designed by the manufacturer, used for the support of floors and roofs. This does not include structural steel trusses.

Steep-sloped roof: a roof having a slope greater than 4 in 12 (vertical to horizontal).

Steel truss: an open web member designed of structural steel components by the project structural engineer of record. A steel truss is considered equivalent to a solid web structural member.

Stemming: a suitable inert incombustible material or device used to confine or separate explosives in a drill hole or to cover explosives in mud capping.

Step stool: a self-supporting, foldable, portable ladder, non-adjustable in length, 32 in (81.3 cm) or less in height, with flat steps and without a pail shelf, designed to be climbed on the ladder top cap as well as all steps.

Storage tank: any vessel having a liquid capacity that exceeds 60 gal (227.1 L) is intended for fixed installation and is not used for processing.

Stored energy: energy (electrical, mechanical, or chemical) that might be found in a charge capacitor, a loaded spring, chemical solutions, or other similar hazardous form.

Strand laid rope: a wire rope made with strands formed around a fiber core, wire core, or independent wire rope core.

Strong irritant: a chemical that is not corrosive, but causes a strong temporary inflammatory effect on living tissue by chemical action at the site of contact.

Structural steel: a steel member, or a member made of a substitute material (such as, but not limited to, fiberglass, aluminum or composite members). These members include, but are not limited to, steel joists, joist girders, purlins, columns, beams, trusses, splices, seats, metal decking, girts, and all bridging, and cold-formed metal framing which is integrated with the structural steel framing of a building.

Supplied-air respirator (SAR) or airline respirator: an atmosphere-supplying respirator for which the source of breathing air is not designed to be carried by the user.

Support system: a structural means of supporting the walls of an excavation to prevent cave-ins; includes shields, shoring, underpinning, rock bolts, etc.

Surface-supplied air (SSA): a diving mode in which the diver in the water is supplied from the dive location with compressed air for breathing.

Swaged fittings: fittings in which wire rope is inserted and attached by cold flowing method.

Swinger mechanism: the device that rotates a derrick mast.

Swinging (hanging) lead: pile-driving leads that are suspended from an extended boom point sheave pin at the top of the boom. The bottom points of the leads are positioned astride the pile location, the hammer is vertically above the top of the pile. Often the bottoms of the leads are pointed and the weight of the pile leads and hammer force the bottom points into the ground, holding them in position.

Switch: a device for connecting two or more continuous package conveyor lines; an electrical control device; or a mechanism that transfers a trolley, carrier, or truck from one track to another at a converging or diverging section.

System: includes machinery, equipment, and electrical, hydraulic, and pneumatic lines and their subsystems.

Systems-engineered metal building: a metal, field-assembled building system consisting of framing, roof, and wall coverings. Typically, many of these components are cold-formed shapes. These individual parts are fabricated in one or more manufacturing facilities and shipped to the job site for assembly into the final structure. The engineering design of the system is normally the responsibility of the systems-engineered metal building manufacturer.

Tackle: an assembly of ropes and sheaves arranged for lifting, lowering and pulling.

Tagout: a form of hazardous energy control procedure using the placement of a tagout device, in accordance with established procedures, on an energy-isolating device to indicate that the energy-isolating device and the system being controlled may not be operated until the tagout device is removed.

Tagout device: a prominent warning device, such as a tag with a means of attachment, that can be securely attached to an energy-isolating device in accordance with established procedures to indicate that the energy-isolating device and system being controlled may not be operated until the tagout device is removed.

Tailing crane lift: a procedure sometimes used in erecting large pressure vessels or structural elements in which one crane (lead crane) lifts the top of the load and a second crane (tail crane), rigged to the bottom of the load, either secures the bottom of the load from movement or assists in the horizontal positioning of the load.

Take-up: the assembly of the necessary structural and mechanical parts that provides the means to adjust the length of belts, cables, chains, and similar transmission mechanisms to compensate for stretch, shrinkage, or wear, and to maintain proper tension.

Tandem crane lift: the use of two or more cranes to lift a load.

Taut-line hitch: a knot used for securing all workers aloft to their climbing rope, and consisting of either one or two wraps over two wraps.

Threshold limit values (TLV): airborne concentrations of substances and represent conditions under which it is believed that nearly all workers may be repeatedly exposed day after day without adverse health effects. Because of wide variation in individual susceptibility, however, a small percentage of workers may experience discomfort from some substances at concentrations at

or below the threshold limit; a smaller percentage may be affected more seriously by aggravation of a pre-existing condition or by development of an occupational illness.

Tied in: the term that describes a tree climber whose climbing line has been properly crotched and attached to the saddle and whose taut-line hitch is tied.

Tight-fitting facepiece: a respiratory inlet covering that forms a complete seal with the face.

Toeboard: a vertical barrier at floor level erected along exposed edges of a floor opening, wall opening, platform, runway, or ramp to prevent materials from falling.

Tool rest (work rest): a device that prevents the tool or work piece from jamming between the abrasive wheel and the wheel guard.

Top running bridge: a bridge that travels over top of a runway track.

Toprail: the uppermost horizontal rail of a guardrail system.

Total effective dose equivalent: the sum of the deep-dose equivalent (for external exposures) and the committed effective dose equivalent (for internal exposures).

Total flooding systems: a fixed suppression system that is arranged to automatically discharge a predetermined concentration of agent into an enclosed space for fire extinguishment or control.

Toxic: pertaining to, or caused by, poison; poisonous; harmful.

Toxic chemical: is a chemical that produces serious injury or illness by absorption through any body surface

Track-guided personnel hoist system: a hoist system used to transport personnel in a car that is attached to fixed tracks or guide members.

Transitional surface: a sideways extension of all primary surfaces, clear zones, and approach-departure clearance surfaces along inclined planes.

Transitional zone: the ground area under the transitional surface (and adjoining the primary surface, clear zone, and approach-departure clearance zone).

Travel time (marine): time spent transiting to and from the rest location when not immediately adjacent to or aboard the work site.

Trench: an excavation that is narrow in relation to its length; in general, the depth is greater than the width, and the width is not greater than 15 ft (4.6 m).

Trim (floating crane barge): the angle of inclination about the transverse axis of the barge or pontoon.

Trolley: the unit that travels on bridge rails and supports the load block.

Trolley conveyor: a series of trolleys supported from or within an overhead truck and connected by endless propelling means, such as chain, cable, or other linkage, with loads usually suspended from the trolleys.

Trolley line: a horizontal line for direct attachment to a worker's body belt, lanyard, or deceleration device.

Truck (crane): the unit consisting of a frame, wheels, bearings, and axles that supports the bridge girders or trolleys.

Tunnel: an excavation beneath the surface of the ground, the longer axis of which makes an angle not greater than 20° to the horizontal. **>** ***See Shaft.***

Two-block damage prevention device: a system that will stall when two-blocking occurs without causing damage to the hoist rope or crane machinery components.

Two-block warning device: a warning device to alert the operator of an impending two-blocking condition.

Two-blocking: the condition when the lower load block or hook assembly comes in contact with the upper load block, or when the load block comes in contact with the boom tip.

Underpinning: the process of placing a new foundation beneath an existing foundation to replace or strengthen the existing foundation; shoring or other temporary support systems are used to support the underpinned structure until its loads can be effectively transferred to the new foundation.

Unfired pressure vessels: vessels that can withstand internal pressure or vacuum but do not have the direct fire of burning fuel or electric heaters (heat may be generated in the vessel due to chemical reactions or the application of heat to vessel contents).

Unprotected sides and edges: any side or edge (except at entrances to points of access) of a walking/working surface (e.g., floor, roof, ramp or runway) where there is no wall or guardrail system at least 39 in (99.1 cm) high.

Unsafe Condition: any physical state that is not acceptable or that presents risks to personal safety, or that has the potential to cause personal injury, illness, and/or damage to property. Also, any physical state that contributes to a reduction in the degree of safety normally present.

Upright: a vertical structural support member. In excavation support systems, uprights are placed in contact with the earth and are usually spaced so that individual uprights do not contact one another. Uprights that are spaced such that they are in contact with or interconnected to one another are referred to as sheeting.

USACE Diving Coordinator (UDC): a USACE employee assigned the responsibility for organizing, integrating, and monitoring the total dive program within a USACE Command. This individual and an alternate (to perform in the absence of the primary UDC) shall be appointed, in writing, by the USACE Commander/Director and shall assure adherence to all applicable rules and regulations: at the Major Subordinate Command (MSC) (Division), the Diving Coordinator shall provide program guidance and monitor and annually review the MSC dive program at all subordinate levels; at the District, Laboratory, and FOA level, the Diving Coordinator shall review all safe practices manuals, dive plans, medical certificates, and dive team qualifications and experience to assure compliance with this manual. The UDC and the alternate shall, as a minimum, successfully complete the HQUSACE-approved Diving Safety or Diving Supervisor Training Course and shall maintain certification by attending the diving refresher course every 4 years. UDCs attending the Diving Safety course are not required to perform 12 working/training dives unless they are in a dual position as a USACE diver or USACE Diving Supervisor.

User seal check: an action conducted by the respirator user to determine if the respirator is properly seated to the face.

Vacuum systems: all pipe, tanks, tubing, valves, controls, and other devices that operate or are maintained below atmospheric pressure.

Vehicle-mounted elevating and rotating work platforms: an elevating and rotating work platform mounted on the chassis of a commercial vehicle.

Vessel: every type of watercraft or artificial contrivance used, or capable of being used, as a means of transportation on water, including special-purpose floating structures not primarily designed for or used as a means of transportation on water.

Voltage: the effective (root mean squared (RMS)) potential difference between any two conductors or between a conductor and ground. Voltages are expressed in nominal values. The nominal voltage of a system or circuit is the value assigned to a system or circuit of a given voltage class for convenient designation.

Voltage-to-ground: for grounded circuits, the voltage between the given conductors and that point or conductor of the circuit that is grounded; for ungrounded circuits, the greatest voltage between the given conductor and any other conductor of the circuit.

Wall hole: a wall opening less than 30 in (76.2 cm) but more than 1 in (2.5 cm) in height and of unrestricted width.

Wall opening: a wall opening at least 30 in (76.2 cm) high and 18 in (45.7 cm) wide.

Weighting factor: factor that represents the proportion of the total stochastic (cancer plus genetic) risk resulting from irradiation to tissue to the total risk when the whole body is irradiated uniformly.

Wet bulb globe temperature (WBGT) index: a measurement of environmental factors that correlate with human deep body temperature and other physiological responses to heat.

Wet location: installations underground or in concrete slabs or masonry in direct contact with the earth and locations subject to saturation with water or other liquids, such as vehicle washing basins, and locations exposed to weather and unprotected.

Whaler: a horizontal structural member; in excavation support systems, whalers are placed parallel to the face of the excavation and bear against uprights or the excavation wall.

Whipline (runner or auxiliary line): a separate hoist rope system usually of a lighter load capacity than the main hoist.

Wildland fire: a planned or an unplanned fire in wild land fuels.

Windlass: a deck machine, usually power operated, used for heaving in or paying out anchor chain.

Wire rope: a number of strands laid helically about a metallic or non-metallic core. Each strand consists of a number of wires also laid helically about a metallic or non-metallic center. Wire rope is specified by the kind of core, the number of strands, the number, sizes, and arrangement of the wires in each strand, and the way in which the wires and strands are wound or laid about each other. Wire rope is commonly designated by two numbers: the first indicating the number of strands and the second the number of wires per strand (for ropes with a wire strand core, a second group of two numbers may be used to indicate the construction of the wire core).

Wire strand core: consists of a multiple-wire strand that may be the same as one of the strands of the rope: It is smoother and more solid than the independent wire rope core and provides a better support for the rope strands.

Work (marine): any activity that is performed on behalf of a vessel, its crew, or the vessel's owner or operator. This includes standing watches, performing maintenance on the vessel or its appliances, transferring cargo, or performing administrative tasks, whether underway or at the dock.

Working load: load imposed by persons, materials, and equipment.

Workload classification:

a. **Sedentary**: sitting

b. **Light**: sitting or standing to control machines; performing light hand or arm work.

c. **Moderate**: walking about with moderate lifting or pushing.

d. **Heavy**: physical labor such as pick and shovel work.

APPENDIX R

METRIC CONVERSION TABLE

Unit A Measure	To convert Unit A to B Measure multiply by:	To convert Unit B to A multiply by:	Unit B Measure
ACCELERATION			
Foot/second^2	0.3048	3.2808	Metre/second^2
ANGLES			
Mils (circular)	0.0562	17.78	Degree, angular
AREA			
Acre	4,047	2.471×10^{-4}	Metre^2
Acre	1.563×10^{-3}	640	Square miles
Foot^2	0.09290	10.764	Metre^2
Inch^2	6.452	0.155	Centimeters^2
Mile^2 (US Statute)	2,589.988	3.861×10^{-7}	Metre^2
Yard^2	0.8361	1.1960	Metre^2
BENDING MOMENT (Torque)			
Kilogram-force-metre	9.8067	0.102	Newton-metre
Pound-force-foot	1.356	0.7375	Newton-metre
CAPACITY (See Volume)			
DENSITY (See Mass/Volume)			
ENERGY (Includes Work)			
Foot-pound	0.001285	778.1	BTU
Foot-Pound	3.766×10^{-7}	2655	Kilowatt-hours

Unit A Measure	To convert Unit A to B Measure multiply by:	To convert Unit B to A multiply by:	Unit B Measure
Foot-pound-force	1.356	0.7376	Joule
Kilowatt-hour	3,600,000	2.778×10^{-7}	Joule
Watt-second	1.000	1.000	Joule
FLOW (See Mass/Time or Volume/Time)			
FORCE			
Kilogram-force	9.8067	0.1020	Newton
Kip	4448	0.0002248	Newton
Pound-force (avoirdupois)	4.488	0.2248	Newton
FORCE/AREA (See Pressure)			
FORCE/LENGTH			
Pound-force/ foot	14.59	0.06852	Newton/metre
LENGTH			
Angstrom	1.0×10^{-10}	1.0×10^{10}	Metre
Fathom	1.829	0.5468	Metre
Foot (US Survey)	0.3048	3.281	Metre
Foot (US Survey)	0.167	6	Fathoms
Inch	2.54	0.3937	Metre
Mil	2.540×10^{-5}	3937	Metre
Mile (US Nautical)	1852.000	0.00054	Metre
Mile (US	1609	0.0006214	Metre

Unit A Measure	To convert Unit A to B Measure multiply by:	To convert Unit B to A multiply by:	Unit B Measure
Statute)			
Mile (US Statute)	0.869	1.115	Nautical Mile
Mile (US Statute)	5,280	1.894×10^{-4}	Feet
LIGHT			
Foot candle	10.76	0.09290	Lumen/metre^2 (Lux)
MASS			
Grain	0.0648	15.432	Grams
Ounce-mass (avoirdupois)	0.02835	35.26	Kilogram
Ounce	437.5	0.002286	Grains
Pound	0.0004464	2240	Long or Gross Ton
Slug	14.59	0.06854	Kilogram
Ton (Long, 2240 lbs)	1016	0.0009842	Kilogram
Ton (Metre)	1000.00	0.001	Kilogram
Ton (Short, 2000 lbs)	907.2	0.001102	Kilogram
Ton (Net or short-tons)	0.8929	1.12	Ton (long or gross)
MASS/AREA			
Pound-mass/foot^2	4.882	0.2048	Kilogram/metre^2
MASS/CAPACITY (See Mass/Volume)			
MASS/TIME (Includes Flow)			

Unit A Measure	To convert Unit A to B Measure multiply by:	To convert Unit B to A multiply by:	Unit B Measure
Cubic feet per second	448.8	0.002228	US Gallons/min
Pound-mass per second	0.4536	2.205	Kilogram/second
Ton (short, mass) per hour	0.2520	3.968	Kilogram/second
MASS/VOLUME			
Pound-mass/foot^3	16.02	0.06243	Kilogram/metre^3
Pound-mass/inch^3	27680	3.613×10^{-5}	Kilogram/metre^3
Ton (long,mass)/ yard^3	1329	0.0007525	Kilogram/metre^3
POWER			
Foot-pound-force/hour	3.766×10^{-4}	2655	Watt
Horsepower	550	0.001818	Foot-pounds per sec
Horsepower (550 ft-lb/s)	745.7	0.001341	Watt
Horsepower (water)	746.0	.001340	Watt
Horsepower (US)	1.014	0.9863	Horsepower (metric)
PRESSURE OR STRESS (Force/Area)			
Atmospheres (mean)	33.90	0.02950	Feet of water

Unit A Measure	To convert Unit A to B Measure multiply by:	To convert Unit B to A multiply by:	Unit B Measure
Atmospheres (mean)	14.70	0.0680	Pounds per sq inch
Atmospheres (mean)	29.92	0.03342	Inches of mercury
Feet of Water	62.43	0.01602	Pounds per sq foot
PSI	2.036	0.4912	Inches of mercury
SHIPPING			
Cubic feet	0.010	100.0	Register tons
Cubic feet	0.0250	40.0	US shipping tons
Cubic feet	0.0238	42.0	British shipping tons
SPEED (See Velocity)			
STRESS (See pressure)			
TEMPERATURE			
Degree Fahrenheit	t°C= (t°F-32)/1.8	t°F =1.8 t°C +32	Degree Celsius
TORQUE (See Bending Moment)			
VELOCITY (Includes Speed)			
Foot/second	0.3048	3.281	Metre/second
Kilometre/hour	0.2778	3.600	Metre/second
Knot (International)	0.5144	1.944	Metre/second
Miles/hour	1.467	0.6818	Feet/second
VOLUME			
Board foot	0.002306	423.8	Metre^3
Foot^3	0.02832	35.31	Metre^3
Foot^3	1728	0.000579	Inches^3

Unit A Measure	To convert Unit A to B Measure multiply by:	To convert Unit B to A multiply by:	Unit B Measure
Foot^3	7.481	0.1337	Gallons (US)
Gallon (Canadian liquid)	0.0045461	219.97	Metre^3
Gallon (US liquid)	0.003785	264.2	Metre^3
Gallon (US liquid)	0.8325	1.201	Gallons (Imperial)
Gallon (US liquid)	3.785	0.2672	Liter
Inch^3	1.6387×10^{-5}	61,024	Metre^3
Litre	0.0010	1000	Metre^3
Ton (register)	2.832	0.3532	Metre^3
Yard^3	.76456	1.308	Metre^3
VOLUME/TIME (Includes Flow)			
Foot^3/minute	4.719×10^{-4}	2,118.9	Metre^3/second
Yard^3/minute	0.01274	78.48	Metre^3/second
Gallon (U.S. liquid)/minute	6.309×10^{-5}	15,850	Metre^3/second
WEIGHT, LINEAR			
Pounds/foot	1.488	0.672	Kilogram per meter
Pounds/yard	0.496	2.016	Kilogram per meter
WORK (See Energy)			

APPENDIX S

REFERENCES AND RESOURCES

SECTION A. REFERENCES

1. NUMBERED PUBLICATIONS

ACI 347	Guide to Formwork for Concrete
ANSI 01.1	Woodworking Machinery
ANSI A10.3	Safety Requirements for Powder-Activated Fastening Systems
ANSI A10.4	Safety Requirements for Personnel Hoists and Employee Elevators for Construction and Demolition Operations
ANSI A10.5	Safety Requirement for Material Hoists
ANSI A10.7	Safety Requirements for Commercial Explosives and Blasting Agents
ANSI A10.8	Safety Requirements for Scaffolding
ANSI A10.22	Safety Requirements for Rope-Guided and Non Guided Worker's Hoists
ANSI A14.1	Ladders – Wood – Safety Requirements
ANSI A14.2	Ladders – Portable Metal – Safety Requirements
ANSI A14.3	Ladders – Fixed – Safety Requirements

ANSI A14.4	Safety Requirements for Job Made Wooden Ladders
ANSI B74.2	Specifications for Shapes and Sizes of Grinding Wheels, and for Shapes and Sizes and Identifications of Mounted Wheels
ANSI C95.4	Radio Frequency Antennas When Using Electric Blasting Caps During Explosive Operations
ANSI D6.1	Manual on Uniform Traffic Control Devices for Streets and Highways
ANSI Z41	Personnel Protection – Protective Footwear
ANSI Z80.3	Requirements for Nonprescription Sunglasses and Fashion Eyewear
ANSI Z88.2	Practices for Respiratory Protection
ANSI Z89.1	Personal Protection - Protective Headwear for Industrial Workers
ANSI Z136.1	Safe Use of Lasers
ANSI Z308.1	Minimum Requirements for Workplace First Aid Kits
ANSI Z358.1	Emergency Eyewash and Shower Equipment
ANSI Z535.1	Safety Color Code
ANSI Z535.2	Environmental and Facility Safety Signs

ANSI Z535.5	Accident Prevention Tags (for temporary hazards)
ANSI/ACDE-01	Divers – Commercial Diver Training – Minimum Standard
ANSI/AGA GPTC Z380.1	GPTC Guide for the Gas Transmission and Distribution Piping System
ANSI/API 2C	Specification for Offshore Cranes
ANSI/ASME A13.1	Scheme for the Identification of Piping Systems
ANSI/ASME A17.1	Safety Code for Elevators and Escalators
ANSI/ASME B30.2	Overhead and Gantry Cranes, Top Running Bridge, Single or Multiple Girder, Top Running Trolley Hoist
ANSI/ASME B30.3	Construction Tower Cranes
ANSI/ASME B30.4	Portal, Tower, and Pedestal Cranes
ANSI/ASME B30.5	Mobile and Locomotive Cranes
ANSI/ASME B30.6	Derricks
ANSI/ASME B30.8	Floating Cranes and Floating Derricks
ANSI/ASME B30.9	Slings
ANSI/ASME B30.11	Monorails and Underhung Cranes
ANSI/ASME B30.12	Handling Loads Suspended from Rotorcraft

ANSI/ASME B30.17	Overhead and Gantry Cranes (Top Running Bridge, Single Girder, Underhung Hoist)
ANSI/ASME B30.22	Articulating Boom Cranes
ANSI/ASME B31.1	Power Piping
ANSI/ASME B56.1	Safety Standard for Low Lift and High Lift Trucks
ANSI/ASSE Z87.1	Practice for Occupational and Educational Eye and Face Protection
ANSI/ASSE Z359.1	Safety Requirements for Personal Fall Arrest Systems
ANSI/AWS D1.0	Code for Welding in Building Construction
ANSI/AWS D1.1	Structural Welding Code - Steel
ANSI/AWS F4.1	Recommended Safe Practices for Preparation for Welding and Cutting of Containers and Piping
ANSI/AWS Z49.1	Safety in Welding, Cutting and Allied Processes
ANSI/IEEE C95.2	Standard for Radio Frequency Energy and Current Flow Symbols
ANSI/IESNA RP-1	Practice for Office Lighting
ANSI/IESNA RP-8	Roadway Lighting ANSI Approved
ANSI/IESNA RP-12	Marine Lighting

ANSI/ISEA 105	Hand Protection Selection Criteria
ANSI/ISEA 107	High Visibility Safety Apparel
ANSI/SIA A92.2	Vehicle-Mounted Elevating and Rotating Aerial Devices
ANSI/SIA A92.3	Manually Propelled Elevating Aerial Platforms
ANSI/SIA A92.5	Boom-supported Elevated Working Platforms
ANSI/SIA A92.6	Self-Propelled Elevating Work Platforms
ANSI/UL 1313	Nonmetallic Safety Cans for Petroleum Products
AR 11-9	The Army Radiation Safety Program
AR 11-34	The Army Respiratory Protection Program
AR 40-5	Preventive Medicine
AR 95 Series	Aviation
AR 200-1	Environmental Protection and Enhancement
AR 385-10	The Army Safety Program
AR 385-11	Ionizing Radiation Protection
AR 385-40	Accident Reporting and Records
AR 385-55	Prevention of Motor Vehicle Accidents

AR 700-136	Tactical Land Based Water Resources Management in Contingency Operations
ASCE 7-98	Guide to the Use of Wind Load Provisions
ASTM D120	Standard Specification for Rubber Insulating Gloves
ASTM D1051	Standard Specification for Rubber Insulating Sleeves
ASTM F496	Standard Specification for In-Service Care of Insulating Gloves and Sleeves
ASTM F696	Standard Specification for Leather Protectors for Rubber Insulating Gloves and Mittens
ASTM F852	Standard Specification for Portable Gasoline Containers for Consumer Use
ASTM F976	Standard Specification for Portable Kerosine Containers for Consumer Use
ASTM F1117	Standard Specification for Dielectric Overshoe Footwear
ASTM F1166	Standard Practice for Human Engineering Design for Marine Systems, Equipment and Facilities
ASTM F1236	Standard Guide for Visual Inspection of Electrical Protective Rubber Products

ASTM F1506	Standard Performance Specification for Flame Resistant Textile Materials for Wearing Apparel for Use by Electrical Workers Exposed to Momentary Electric Arc and Related Thermal Hazards
ASTM F1897	Standard Specification for Leg Protection for Chain Saw Users
CGA C6	Standard for Visual Inspection of Steel Compressed Gas Cylinders
CGA C8	Standard for Requalification of DOT-3HT, CTC-3HT, and TC-3HTM Seamless Steel Cylinders
CGA G7.1	Commodity Specification for Air
CMAA 70	Multiple Girder Electric Overhead Traveling Cranes
DFARS Subpart 252.223-7004	Drug-Free Work Force
DODI 4715.5-G	Overseas Environmental Baseline Guidance Document
DODI 6055.1	DOD Safety and Occupational Health Program
DODI 6055.3	Hearing Conservation
DODI 6055.12	DOD Hearing Conservation Program
EO 12196	Occupational Safety and Health Programs for Federal Employees

EP 310-1-6A	Sign Standards Manual, Volume 1
EP 310-1-6B	Sign Standards Manual, Volume 2
EP 1130-2-500 Appendix L	Inspection and Certification Agreement Between USACE and USCG
EP 1130-2-540	Project Operations and Environmental Stewardship Operations and Maintenance Guidance and Procedures
ER 95-1-1	Control and Use of Aircraft
ER 385-1-6	Standard Color and Markings for Hardhats
ER 385-1-91	Training, Testing, and Licensing of Boat Operators
FAR Clause 52.236-13	Accident Prevention
Federal Aviation Regulation 91	General Operating and Flight Rules
Federal Aviation Regulation 133	Rotorcraft External-Load Operations
Federal Aviation Regulation 135	Operating Requirements: Commuter and On Demand Operations and Rules Governing Persons On Board Such Aircraft
FM 10-52	Water Supply in Theaters of Operations
FM 21-10/ MCRP 4-11.1D	Field Hygiene and Sanitation

MIL-STD 101B	Color Code for Pipelines and for Compressed Gas Cylinders
NAVMED P-5010-010-LP-207-1300	Manual of Naval Preventive Medicine
NAVSEA S9074-AQ-GIB-010/248	Requirements for Welding Brazing Procedure and Performance Qualifications
NEC 250	Grounding
NEC 250.30	Grounding of Transformers and Generators
NEC 250.34	Grounding of Services Equipment
NEC 410	Lighting Fixtures, Lampholders, Lamps, and Receptacles
NEC 502	Class II Locations
NFPA 10	Portable Fire Extinguishers
NFPA 30	Flammable and Combustible Liquids Code
NFPA 30A	Automotive and Marine Service Station Code
NFPA 51	Standard Design and Installation of Oxygen-Fuel Gas Systems for Welding, Cutting, and Allied Processes
NFPA 58	Liquefied Petroleum Gas Code

NFPA 70E	Standard for Electrical Safety Requirements for Employee Workplaces
NFPA 101	Life Safety Code
NFPA 241	Safeguarding Construction, Alteration, and Demolition Operations
NFPA 295	Wildfire Control
NFPA 302	Pleasure and Commercial Motor Craft
NFPA 327	Cleaning or Safeguarding Small Tanks and Containers without Entry
NFPA 386	Portable Shipping Tanks for Flammable and Combustible Liquids
NFPA 1977	Protective Clothing and Equipment for Wildland Fire Fighting
NIST Voluntary Product Standard DOC PS 20	American Softwood Lumber Standard
Power Crane and Shovel Association Standard No. 4	Draglines
SAE J167	Overhead Protection for Agricultural Tractors - Test Procedures and Performance Requirements
SAE J220	Crane Boom Stops
SAE J231	Minimum Performance Criteria for Falling Object

SAE J386	Operator Restraint System for Off-Road Work Machines
SAE J1040	Performance Criteria for Rollover Protective Structures (ROPS) for Construction, Earthmoving, Forestry, and Mining Machines
SAE J1042	Operator Protection for General-Purpose Industrial Machines
SAE J1043	Minimum Performance Criteria for Falling Object Protective Structure (FOPS) for Industrial Machines
SAE J1084	Operator Protective Structure Performance Criteria for Certain Forestry Equipment
SAE J1194	Roll Over Protective Structures (ROPS) for Wheeled Agricultural Tractors
SAE J1366	Rating Lift Cranes Operating on Platforms in the Ocean Environment
TB MED 577	Sanitary Control and Surveillance of Field Water Supplies
UFGS 01525	Safety Requirements
UL 943	Ground-Fault Circuit-Interrupters
5 CFR 293	Personnel Records
10 CFR 20	Standards for Protection Against Radiation

10 CFR 20 Appendix A	Assigned Protection Factors for Respirators
10 CFR 20 Appendix B	Annual Limits on Intake (ALIs) and Derived Air Concentrations (DACs) of Radionuclides for Occupational Exposure; Effluent Concentrations; Concentrations for Release of Sewerage
10 CFR	Energy
10 CFR 20 Appendix C	Quantities of Licensed Material Requiring Labels
10 CFR 20.1906	Procedures for Receiving and Opening Packages
14 CFR	Aeronautics and Space
14 CFR 91	General Operating and Flight Rules
14 CFR 133	Rotorcraft External-Load Operations
14 CFR 135	Operating Requirements: Commuter and On Demand Operations and Rules Governing Persons On Board Such Aircraft
27 CFR	Alcohol, Tobacco Products and Firearms
27 CFR 555	Commerce in Explosives
29 CFR	Labor
29 CFR 1904	Recording and Reporting Occupational Injuries and Illnesses

29 CFR 1910	Occupational Safety and Health Standards
29 CFR 1910 Subpart T	Commercial Diving Operations
29 CFR 1910.94	Ventilation
29 CFR 1910.25	Portable Wood Ladders
29 CFR 1910.95 Appendix A	Noise Exposure Computation
29 CFR 1910.109	Explosives and Blasting Agents
29 CFR 1910.119	Process Safety Management of Highly Hazardous Chemicals
29 CFR 1910.120	Hazardous Waste Operations and Emergency Response
29 CFR 1910.134	Respiratory Protection
29 CFR 1910.134 Appendix B-1	User Seal Check Procedures
29 CFR 1910.134 Appendix C	OSHA Respirator Medical Evaluation Questionnaire
29 CFR 1910.134 Appendix D	Information for Employees Using Respirators When Not Required Under the Standard
29 CFR 1910.141	Sanitation
29 CFR 1910.145	Specifications for Accident Prevention Signs and Tags

29 CFR 1910.146	Permit-Required Confined Spaces
29 CFR 1910.155	Scope, Application and Definitions Applicable to Subpart L
29 CFR 1910.178	Powered Industrial Trucks
29 CFR 1910.213	Woodworking Machinery Requirements
29 CFR 1910.219	Mechanical Power-Transmission Apparatus
29 CFR 1910.1000	Air contaminants
29 CFR 1910.1000 Table Z-3	Mineral Dusts
29 CFR 1910.1001	Asbestos
29 CFR 1910.1020	Access to Employee Exposure and Medical Records
29 CFR 1910.1025	Lead
29 CFR 1910.1030	Bloodborne Pathogens
29 CFR 1910.1096	Ionizing Radiation
29 CFR 1910.1200	Hazard Communication
29 CFR 1915	Occupational Safety and Health Standards for Shipyard Employment
29 CFR 1915 Subpart B	Confined and Enclosed Spaces for Other Dangerous Atmospheres in Shipyard Employment

29 CFR 1918.66	Cranes and Derricks Other Than Vessel's Gear
29 CFR 1926	Safety and Health Regulations for Construction
29 CFR 1926 Subpart P	Excavations
29 CFR 1926 Subpart R	Steel Erection
29 CFR 1926 Subpart U	Blasting and the Use of Explosives
29 CRF 1926.35	Employee Emergency Action Plans
29 CFR 1926.59	Hazard Communication
29 CFR 1926.62	Lead
29 CFR 1926.64	Process Safety Management of Highly Hazardous Chemicals
29 CFR 1926.65	Hazardous Waste Operations and Emergency Response
29 CFR 1926.754	Structural Steel Assembly
29 CFR 1926.803	Compressed Air
29 CFR 1926.1101	Asbestos
29 CFR 1960	Basic Program Elements for Federal Employees OSHA
30 CFR	Mineral Resources

30 CFR 36	Approval Requirements for Permissible Mobile Diesel-Powered Transportation Equipment
30 CFR 56	Safety and Health Standards--Surface Metal and Nonmetal Mines
30 CFR 57	Safety and Health Standards--Underground Metal and Nonmetal Mines
30 CFR 70	Mandatory Health Standards--Underground Coal Mines
30 CFR 71	Mandatory Health Standards--Surface Coal Mines and Surface Work Areas of Underground Coal Mines
33 CFR	Navigation and Navigable Waters
33 CFR 88.13	Lights on Moored Barges
33 CFR 88.15	Lights on Dredge Pipelines
33 CFR 155	Oil or Hazardous Material Pollution Prevention Regulations for Vessels
33 CFR 155.320	Fuel Oil and Bulk Lubricating Oil Discharge Containment
33 CFR 156	Oil and Hazardous Material Transfer Operations
33 CFR 156.120	Requirements for Transfer
33 CFR 183	Boats and Associated Equipment
40 CFR	Protection of Environment

40 CFR 61 Subpart M	National Emission Standard for Asbestos
40 CFR 141	National Primary Drinking Water Regulations
40 CFR 143	National Secondary Drinking Water Regulations
40 CFR 302	Designation, Reportable Quantities, and Notification
42 CFR	Public Health
42 CFR 84	Approval of Respiratory Protective Devices
46 CFR	Shipping
46 CFR 25.30-15	Fixed Fire Extinguishing Systems
46 CFR 45.115	Bulwarks and Guardrails
46 CFR 58.50-10	Diesel Fuel Tanks
46 CFR 64	Marine Portable Tanks and Cargo Handling Systems
46 CFR 98.30	Handling and Storage of Portable Tanks
46 CFR 160	Lifesaving Equipment
46 CFR 173	Special Rules Pertaining to Vessel Use

49 CFR	Transportation
49 CFR Chapter 1	U.S. DOT Hazardous Materials Regulations
49 CFR 171	General Information, Regulations, and Definitions
49 CFR 172	Hazardous Materials Table, Special Provisions, Hazardous Materials Communications, Emergency Response Information and Training Requirements
49 CFR 173	Shipping Container Specification Regulations of the Department of Transportation
49 CFR 174	Carriage by Rail
49 CFR 175	Carriage by Aircraft
49 CFR 176	Carriage by Vessel
49 CFR 177	Carriage by Public Highway
49 CFR 177.835	Class 1 (Explosive) Materials
49 CFR 178	Specifications for Packaging
49 CFR 179	Specifications for Tank Cars
49 CFR 192	Welding of Steel in Pipelines
49 CFR 571	Federal Motor Vehicle Safety Standards

2. UNNUMBERED PUBLICATIONS

ABS, *Guide for Certification of Cranes*.

ACGIH, *Threshold Limit Values and Biological Exposure Indices*.

AIHA, *Welding Health and Safety: A Field Guide for OEHS Professionals.*

ASME, *Boiler and Pressure Vessel Code*.

ASME, *Code for Unfired Pressure Vessels*.

DOT Federal Highway Administration's, *Manual on Uniform Traffic Control Devices for Streets and Highways*.

ILO International Classification of Radiographs of Pneumoconioses, most recent edition.

National Classification Committee, *National Motor Freight Classification,* National Motor Freight Traffic Association, Alexandria, VA.

NBBI, *National Board Inspection Code*.

NIOSH, *Respirator Decision Logic*.

NIOSH, *Work Practice Guide for Manual Lifting*.

Occupational Safety and Health Act of 1970.

Oil Pollution Act of 1990.

Uniform Classification Committee, *Uniform Freight Classification*, National Railroad Freight Committee, Atlanta, GA.

United Nations, *Recommendations on the Transport of Dangerous Goods*, United Nations, New York, 1995.

U.S. Navy Diving Manual.

3. FORMS

ENG Form 5044-R	USACE Entry Permit (LRA)
NRC Form 3	Notice to Employees
NRC Form 241	Report of Proposed Activities in Non-Agreement States, Areas of Exclusive Federal Jurisdiction, or Offshore Waters
OSHA 300 Form	Log of Work-Related Injuries and Illnesses
OSHA 300A Form	Summary of Work-Related Injuries and Illnesses
SF 46	U.S. Government Motor Vehicle Operator's Identification Card
USCG Form 835	Notice of Merchant Marine Inspection Requirements

SECTION B. RESOURCES

Acoustical Society of America (ASA), 2 Huntington Quadrangle, Suite 1N01, Melville, NY 11747-4502; (516) 576-2360, (516) 576-2377 (fax)

American Association of State Highway and Transportation Officials (AASHTO), 444 N. Capitol St., N.W., Washington, DC 20001; (202) 624-5800, (202) 624-5806 (fax)

American Bureau of Shipping (ABS), 16855 Northchase Dr., Houston, TX 77060; (281) 877-5800

American Concrete Institute (ACI), 38800 Country Club Dr., Farmington Hills, MI 48331; (248) 848-3700, (248) 848-3701 (fax)

American Conference of Governmental Industrial Hygienists (ACGIH), 1330 Kemper Meadow Dr., Cincinnati, OH 45240; (513) 742-2020

American Gas Association (AGA), 400 N. Capitol St., N.W., Washington, DC 20001; (202) 824-7000, (202) 824-7115 (fax)

American Industrial Hygiene Association (AIHA), 2700 Prosperity Ave, Suite 250, Fairfax, VA 22031; (703) 849-8888, (703) 207-3561 (fax)

American Institute of Steel Construction (AISC), One East Wacker Dr., Suite 3100, Chicago, IL 60601-2001; (312) 670-2400, (312) 670-5403 (fax)

American Institute of Timber Construction (AITC), 7012 S. Revere Pkwy, Suite 140, Englewood, CO 80112; (303) 792-9559, (303) 792-0669 (fax)

American National Standards Institute (ANSI), 25 West 43rd St., New York, NY 10036; (212) 642-4900, (212) 398-0023 (fax)

American Petroleum Institute (API), 1220 L St., NW, Washington, DC 20005-4070; (202) 682-8000, (202) 682-8232 (fax)

American Society of Civil Engineers (ASCE), 1801 Alexander Bell Dr., Reston, VA 20191-4400; (703) 295-6300, (703) 295-6222 (fax)

American Society of Heating, Refrigerating and Air-Conditioning Engineers (ASHRAE), 1791 Tullie Circle, N.E., Atlanta, GA 30329-2305; (404) 636-8400, (404) 321-5478 (fax)

American Society of Mechanical Engineers (ASME), Three Park Ave., New York, NY, 10016-5990; (212) 591-7722, (212) 591-7674 (fax)

American Society of Safety Engineers (ASSE), 1800 E. Oakton St., Des Plaines, IL 60018-2187; (847) 699-929, (847) 768-3434 (fax)

American Society for Testing and Materials (ASTM), 100 Barr Harbor Dr., West Conshohocken, PA 19428-2959; (610) 832-9585, (610) 832-9555 (fax)

American Welding Society (AWS), 550 LeJeune Rd., N.W., Miami FL 33126; (305) 443-9353, (305) 443-7559 (fax)

Association of Diving Contractors (ADC), 5206 FM 1960 West, Suite 202, Houston, TX 77069; (281) 893-8388, (281) 893-5118 (fax)

Compressed Air and Gas Institute (CAGI), 1300 Sumner Ave., Cleveland, OH 44115-2851; (216) 241-7333, (216) 241-0105 (fax)

Compressed Gas Association (CGA), 4221 Walney Rd., 5th Floor, Chantilly, VA 20151-2923; (703) 788-2700, (703) 961-1831 (fax)

Concrete Reinforcing Steel Institute (CRSI), 933 Plum Grove Rd., Schaumberg, IL 60173; (847) 517-1200, (708) 517-1206 (fax)

Conveyor Equipment Manufacturers Association (CEMA), 6724 Lone Oak Blvd, Naples, FL 34109; (239) 514-3441, (239) 514-3470 (fax)

Gas Piping Technology Committee (GPTC, ANSI Z380.1), American Gas Association, 400 N. Capitol Street, N.W., Washington, DC 20001; (202) 824-7000

Grinding Wheel Institute (GWI), 30200 Detroit Rd., Cleveland, OH 44115-1967; (216) 899-0010, (216) 892-1404 (fax)

Hardwood Plywood and Veneer Association. 1825 Michael Faraday Dr., Reston, VA 20195-0789; (703) 435-2900, (703) 435-2537 (fax)

Human Factors and Ergonomics Society, P.O. Box 1369, Santa Monica, CA 90406-1369; (310) 394-1811, (310) 394-2410 (fax)

Illuminating Engineering Society of North America (IESNA), 120 Wall St., Floor 17, New York, NY 10005; (212) 248-500, (212) 248-5017 (fax)

Institute of Electrical and Electronics Engineers (IEEE), 3 Park Ave, 17th Floor, New York, NY 10016-5997; (212) 419-7900, (212) 752-4929 (fax)

Institute of Makers of Explosives (IME), 1120 19th St., N.W., Suite 310, Washington, DC 20036; (202) 429-9280, (202) 293-2420 (fax)

International Organization for Standardization, 1, rue de Varembé, Case postale 56, CH-1211 Geneva 20, Switzerland; +41 22 749 01 11, +41 22 7333 34 30 (fax)

International Safety Equipment Association, 1901 N. Monroe St., Arlington, VA 22209-1762; (703) 525-1695, (703) 528-2148 (fax)

Material Handling Institute (MHI), 8720 Red Oak Blvd., Suite 201, Charlotte, NC 28217; (704) 676-1190, (704) 676-1199 (fax)

Mine Safety and Health Administration (MSHA), 1100 Wilson Blvd., 21st Floor, Arlington, VA 22209-3939; (202) 693-9400, (202) 693-9401 (fax)

National Association of Marine Surveyors, P.O. Box 9306, Chesapeake, VA 23321-9306; (757) 488-9538, (757) 488-0584 (fax)

National Association of Safe Boating Law Administrator (NASBLA), 1500 Leestown Rd., Suite 330, Lexington, KY 40511; (859) 225-9487, (859) 231-6403 (fax)

National Board of Boiler and Pressure Vessel Inspectors (NBBI), 1055 Crupper Ave., Columbus, OH 43229; (614) 888-8320, (614) 888-0750 (fax)

National Bureau of Standards (NBS). See National Institute for Standards and Technology (NIST)

National Electrical Manufacturers Association (NEMA), 1300 N. 17th St., Suite 1847, Rosslyn, VA, 22209; (703) 841-3200, (703) 841-5900 (fax)

National Fire Protection Association (NFPA), 1 Batterymarch Park, P.O. Box 9101, Quincy, MA 02169-7471; (617) 770-3000, (617) 770-0700 (fax)

National Institute for Occupational Safety and Health, 200 Independence Ave, S.W., Rm 715H, Washington, DC 20201; (202) 401-6997

National Institute for Standards and Technology (NIST), 100 Bureau Dr., Stop 3460, Gaithersburg, MD 20899-6478; (301) 975-6478, (301) 975-2128 (fax)

National Safety Council (NSC), 1121 Spring Lake Dr., Itasca, IL 60143-3201; (630) 285-1121, (630) 285-1315 (fax)

Naval Sea Systems Command (NAVSEA), 1333 Isaac Hull Ave, S.E., Washington Navy Yard, DC 20376; (202) 781-000

Occupational Safety and Health Administration (OSHA), 200 Constitution Avenue, NW, Washington, DC 20210; 1-800-321-6742

Power Tool Institute (PTI), 1300 Sumner Ave, Cleveland, OH 44115-2851; (216) 241-7333, (216) 241-0105 (fax)

Scaffold Industry Association (SIA), 20335 Ventura Blvd., Suite 420, Woodland Hills, CA 91364; (818) 610-0320, (818) 610-0323 (fax)

Scaffold, Shoring, and Forming Institute (SSFI), 1300 Sumner Ave, Cleveland, OH 44115-2851; (216) 241-7333, (216) 241-0105 (fax)

Society of Automotive Engineers (SAE), 400 Commonwealth Dr., Warrendale, PA 15096-0001; (724) 776-4841, (724) 776-0790 (fax)

Underwriters Laboratory (UL). 333 Pfingsten Rd., Northbrook, IL60062; (847) 282-8800, (847) 407-1395 (fax)

United States Government Printing Office (GPO), Superintendent of Documents, U.S. Government Printing Office, Washington, DC 20402; (202) 512-1530, (202) 512-1262 (fax)

GLOSSARY

A2B ..... anti-two blocking
ABS ..... American Bureau of Shipping
ACDE ..... Association of Commercial Diving Educators
ACGIH ..... American Conference of Governmental Industrial Hygienist
ACI ..... American Concrete Institute
ACM ..... asbestos containing material
ADC ..... Association of Diving Contractors
AED ..... automatic external defibrillator
AFFF ..... aqueous film foaming foam
AGA ..... American Gas Association
AHA ..... activity hazard analysis/analyses
AIHA ..... American Industrial Hygiene Association
ALARA ..... as low as is reasonably achievable
ALI ..... annual limits
ANSI ..... American National Standards Institute
APF ..... assigned protection factor
API ..... American Petroleum Institute
APP ..... accident prevention plan
AR ..... Army Regulation
ARA ..... Army Radiation Authorization
ASCE ..... American Society of Civil Engineers
ASHRAE ..... American Society of Heating, Refrigerating and Air-Conditioning Engineers
ASME ..... American Society of Mechanical Engineers
ASP ..... Associate Safety Professional
ASSE ..... American Society of Safety Engineers
ASTM ..... American Society for Testing and Materials
ATV ..... all terrain vehicles
AWG ..... American Wire Gauge
AWS ..... American Welding Society
BCD ..... buoyancy compression device
BCSP ..... Board of Certified Safety Professionals
BRAC ..... base realignment and closure
Btu ..... British thermal units

CDC ..... Centers for Disease Control
CERCLA..... Comprehensive Environmental Response, Compensation, and Liability Act
CDZ..... controlled decking zone
cfm ..... cubic feet per minute
CFR..... Code of Federal Regulations
CGA ..... Compressed Gas Association
CHP ..... Certified Health Physicist

CHST ..... Certified Construction Health and Safety Technician
CIH..... Certified Industrial Hygienist
cm ..... centimeter
cm^2..... square centimeter
CMAA..... Crane Manufacturer's Association of America
CO_2 ..... carbon dioxide
CO..... carbon monoxide
CONUS ..... continental United States
COR ..... Contracting Officer's Representative
CPR ..... cardiopulmonary resuscitation
CRZ..... contamination reduction zone
CSP..... Certified Safety Professional
CSTS ..... Certified Safety Trained Supervisor
DA ..... Department of Army
DAC ..... derived air concentration
dB..... decibel
dB(A)..... decibels A-weighed
°C ..... degrees Celsius
°F ..... degrees Fahrenheit
DDC ..... District Diving Coordinator
DFARS..... Defense Federal Acquisition Regulation Supplement
DOD ..... Department of Defense
DODI ..... Department of Defense Instruction
DOE ..... Department of Energy
DOT ..... Department of Transportation
EANx..... nitrox gas
ELSA..... emergency life support apparatus

ELSI ..... end-of-service-life indicator
EMR ..... experience modification rate
EMS ..... emergency medical services
EMT ..... emergency medical technician
EO ..... Executive Order
EOD ..... explosive ordnance disposal
EP ..... Engineering Pamphlet
EPA ..... Environmental Protection Administration
ER ..... Engineering Regulation
ERP ..... emergency response plan
ERT ..... emergency response team
ESLI ..... end-of-service life indicator
ETS ..... environmental tobacco smoke
EZ ..... exclusion zone
FAA ..... Federal Aviation Administration
FAR ..... Federal Acquisition Regulation
fc ..... footcandle
FDA ..... Food and Drug Administration
FEV(1) ..... forced expiratory volume at 1 second
FGS ..... Final Governing Standards
FM ..... Field Manual
FOA ..... field operating activities
FOPS ..... falling object protective structures
ft ..... foot
ft^3 ..... cubic foot
ft^2 ..... square foot
ft/min ..... foot per minute
FUDS ..... formerly used defense sites
FUSRAP ..... formerly used sites remedial action program
FVC ..... forced vital capacity
gal ..... gallon
GDA ..... Government Designated Authority
GFCI ..... ground fault circuit interrupter
GPTC ..... Gas Piping Technology Committee
Gy ..... Gray
HAV ..... Hepatitis A virus
HAZWOPER ..... hazardous waste operations and emergency response
HBV ..... Hepatitis B virus

HCV ..... Hepatitis C virus
HEPA ..... high efficiency particulate air
HIV ..... human immuno-deficiency virus
hp ..... horsepower
HQUSACE ..... Headquarters, US Army Corps of Engineers
HTRW ..... hazardous, toxic, and radioactive waste
HVAC ..... heating, ventilation, and air conditioning
Hz ..... hertz
IAQ ..... indoor air quality
IDLH ..... immediately dangerous to life and health
IEEE ..... Institute of Electrical and Electronics Engineers
IESNA ..... Illuminating Engineering Society of North America
ILO ..... International Labor Office
IME ..... Institute of Makers of Explosives
in ..... inch
in^2 ..... square inch
IRP ..... Installation Restoration Program
IRSC ..... Ionizing Radiation Safety Committee
ISEA ..... International Safety Equipment Association
ISO ..... International Organization of Standardization
kA ..... kiloamp
kg ..... kilogram
kHz ..... kilohertz
km ..... kilometers
kPa ..... kilopascal
kV ..... kilovolt
lb ..... pound
L ..... liter
LID ..... load indicating device
LLD ..... load limiting device
lm ..... lumens
LMI ..... load moment indicating
LP-Gas ..... liquefied petroleum gas
LPN ..... licensed practicing nurse
L/s ..... liters per second
lx ..... lux
m ..... meter
m^3 ..... cubic meter
m^2 ..... square meter

MCRP ..... Marine Corps Reference Publication
mg ..... milligram
mi ..... miles
MIL-STD ..... Military Standard
mm ..... millimeters
MMAD ..... mass median aerodynamic diameters
MOA ..... Memorandum of Agreement
MOU ..... Memorandum of Understanding
mph ..... miles per hour
mrem ..... millirems
MSC ..... major subordinate command
MSDS ..... material safety data sheet
m/s ..... meters per second
MSHA ..... Mine Safety and Health Administration
MSS ..... motion stopping safety system
µSv ..... microsieverts
mSv ..... millisieverts
MVA ..... megavolt-amperes
NAMS ..... National Association of Marine Surveyors
NASBLA ..... National Association of Safe Boating Law Administrators
NAUI ..... National Association of Underwater Instructors
NAVFAC ..... Naval Facilities
NAVMED ..... Navy Medical
NAVSEA ..... Naval Sea Systems Command
NBBI ..... National Board of Boiler and Pressure Vessel Inspectors
NEC ..... National Electrical Code
NEMA ..... National Electrical Manufacturers Association
NESC ..... National Electrical Safety Code
NESHAP ..... National Emissions Standards for Hazardous Air Pollutants
NFPA ..... National Fire Protection Association
NIOSH ..... National Institute of Occupational Safety and Health
NIST ..... National Institute of Standards and Technology
NMFC ..... National Motor Freight Classification
NOAA ..... National Oceanic and Atmospheric Administration

NPDWR.....National Primary Drinking Water Regulation
NRC .....Nuclear Regulatory Commission
NRR .....noise reduction rating
NSC .....National Safety Council
NVLAP .....National Voluntary Laboratory Accreditation Program
OCONUS .....outside continental United States/overseas
OEA .....oxygen enriched air
OEBGD .....overseas environmental baseline guidance document
OEM.....original equipment manufacturer
OSHA.....Occupational Safety and Health Administration
Pa.....pascals
PADI.....Professional Association of Diving Instructors
PAPR .....powered-air purifying respirator
PCB.....polychlorinated biphenyls
pCi/L.....picocuries per liter
PDT .....Project Delivery Team
PEL .....permissible exposure limit
PFD .....personal floatation device
PHA.....position hazard analysis
PLHCP .....Physician Licensed Healthcare Professional
PM.....Project Manager
PMP .....Project Management Plan
POL.....petroleum, oil, and lubricants
PPE .....personal protective equipment
ppm .....parts per million
PRCS .....permit-required confined spaces
PrgMP .....Program Management Plan
psf .....pounds per square foot
psi .....per square inch
psia .....per square inch absolute
QC.....quality control
QLFT.....qualitative fit test
QNFT .....quantitative fit test
RCRA.....Resource Conservation and Recovery Act
RDS .....respirable dust standard
REL .....recommended exposure limit

REM ..... roentgen equivalent in man
RF ..... radio frequency
RN ..... registered nurse
ROPS ..... rollover protective structure
RSC ..... radiation safety committee
RSO ..... radiation safety officer
SAE ..... Society of Automotive Engineers
SAMS ..... Society of Accredited Marine Surveyors
SAR ..... supplied-air respirator
SCBA ..... self-contained breathing apparatus
SCUBA ..... self-contained underwater breathing apparatus
SHM ..... safety and health manager
SIA ..... Scaffold Industry Association
SOP ..... standard operating procedure
SPF ..... sun protection factor
SSA ..... surface-supplied air
SSHO ..... site safety and health officer
SSHP ..... specific safety and health plan
Sv ..... sieverts
SZ ..... support zone
TB MED ..... Technical Bulletin, Medical
T&M ..... time and materials
TEDE ..... total equivalent dose exposure
TLV ..... threshold limit value
TSD ..... treatment storage and disposal
TWA ..... time-weighted average
UDC ..... USACE Command Diving Coordinator
UFC ..... Uniform Freight Classification
UFGS ..... Unified Facilities Guide Specification
UL ..... Underwriters Laboratory
USACE ..... US Army Corps of Engineers
USCG ..... US Coast Guard
USEPA ..... US Environmental Protection Agency
UST ..... underground storage tank
UV ..... ultraviolet
UVA ..... ultraviolet A-region
UVB ..... ultraviolet B-region
UXO ..... unexploded ordnance
WBGT ..... wet bulb globe temperature